No. 06-937
Title: Quanta Computer, Inc., et al., Petitioners
v.
LG Electronics, Inc.
Docketed: January 8, 2007
Lower Ct: United States Court of Appeals for the Federal Circuit
Case Nos.: (05-1261, 05-1262, 05-1263, 05-1264, 05-1302, 05-1303, 05-1304)
Decision Date: July 7, 2006
Rehearing Denied: September 1, 2006
Questions Presented

~~Date~~~	~~~~~~~~Proceedings and Orders~~~~~~~~~~~~~~~~~~~~~~~~
Nov 30 2006	Motion (06M54) of petitioner for leave to file a petition for a writ of certiorari under seal with redacted copies for the public record filed.
Nov 30 2006	Petition for a writ of certiorari filed. (Response due February 7, 2007)
Dec 6 2006	MOTION (06M54) DISTRIBUTED for Conference of January 5, 2007.
Jan 8 2007	Motion (06M54) of petitioner for leave to file a petition for a writ of certiorari under seal with redacted copies for the public record Granted.
Feb 1 2007	Order extending time to file response to petition to and including March 9, 2007.
Mar 9 2007	Brief amici curiae of Dell Inc., et al. filed.
Mar 9 2007	Brief of respondent LG Electronics, Inc. in opposition filed.
Mar 9 2007	Brief amicus curiae of Minebea Co., Ltd. filed.
Mar 20 2007	Reply of petitioners Quanta Computer, Inc., et al. filed.
Mar 21 2007	DISTRIBUTED for Conference of April 13, 2007.
Mar 27 2007	Letter of March 27, 2007, from counsel for petitioner received. (Distributed)
Apr 16 2007	The Solicitor General is invited to file a brief in this case expressing the views of the United States.
Aug 24 2007	Brief amicus curiae of United States filed.
Sep 4 2007	Supplemental brief of respondent LG Electronics, Inc. filed. (Distributed)
Sep 5 2007	DISTRIBUTED for Conference of September 24, 2007.
Sep 25 2007	Petition GRANTED. The brief of petitioners is to be filed with the Clerk and served upon opposing counsel on or before 2 p.m., Monday, November 5, 2007. The brief of respondent is to be filed with the Clerk and served upon opposing counsel on or before 2 p.m., Monday, December 3, 2007. A reply brief, if any, is to be filed with the Clerk and served upon opposing counsel on or before 2 p.m., Friday, December 28, 2007. Briefs of amici curiae are to be filed with the Clerk and served upon counsel for the parties on or before 2 p.m., 7 days after the brief for the party supported is filed, or if in support of neither party, within 7 days after the petitioners' brief is filed.
Oct 31 2007	Consent to the filing of amicus briefs in support of either party received from counsel for the petitioner.
Nov 1 2007	Consent to the filing of amicus curiae briefs in support of either or neither party received from counsel for the respondent.
Nov 5 2007	Joint appendix filed. Volume I (Pages 1 to 144)
Nov 5 2007	Brief of petitioners Quanta Computer, Inc., et al. filed.
Nov 5 2007	Motion for leave to file Volume II of the joint appendix under seal filed by petitioners

Quanta Computer, Inc., et al.

Nov 5 2007 Supplement to Joint Appendix (Pages 199 to 267)

Nov 12 2007 Brief amicus curiae of International Business Machines Corporation filed.

Nov 12 2007 Brief amici curiae of Consumers Union, et al. filed.

Nov 12 2007 Brief amici curiae of Automotive Engine Rebuilders Association, et al. filed.

Nov 13 2007 Brief amicus curiae of United States filed.

Nov 13 2007 Brief amicus curiae of CropLife International filed.

Nov 13 2007 Brief amicus curiae of Gen-Probe Incorporated filed.

Nov 13 2007 Brief amicus curiae of American Seed Trade Association filed.

Nov 13 2007 Brief amicus curiae of NCR Corporation filed.

Nov 13 2007 Brief amicus curiae of American Antitrust Institute filed.

Nov 13 2007 Brief amicus curiae of Licensing Executives Society in Support of Neither Party filed.

Nov 13 2007 Brief amicus curiae of Biotechnology Industry Organization in Support of Neither Party filed.

Nov 13 2007 Brief amici curiae of Nokia Corporation and Nokia Inc. filed.

Nov 13 2007 Brief amici curiae of Dell Inc., Hewlett-Packard Co., Cisco Systems, Inc. and E-Bay Inc. filed.

Nov 13 2007 Brief amicus curiae of Computer & Communications Industry Association filed.

Nov 13 2007 Letter proposing a LODGING received from counsel for amici Dell, Inc., et al.

Nov 13 2007 Brief amicus curiae of Motorola, Inc. filed.

Nov 14 2007 Motion DISTRIBUTED for Conference of November 30, 2007.

Nov 16 2007 SET FOR ARGUMENT ON Wednesday, January 16, 2008.

Dec 3 2007 Motion for leave to file Volume II of the joint appendix under seal. GRANTED.

Dec 3 2007 Brief of respondent LG Electronics, Inc. filed.

Dec 3 2007 Motion of the Solicitor General for leave to participate in oral argument as amicus curiae and for divided argument filed.

Dec 6 2007 CIRCULATED.

Dec 6 2007 Brief amicus curiae of American Intellectual Property Law Association filed. (Distributed)

Dec 10 2007 Motion of the Solicitor General for leave to participate in oral argument as amicus curiae and for divided argument GRANTED.

Dec 10 2007 Brief amicus curiae of Qualcomm Incorporated filed. (Distributed)

Dec 10 2007 Brief amicus curiae of Papst Licensing GMBH & Co.KG filed. (Distributed).

Dec 10 2007 Brief amicus curiae of Intellectual Property Owners Association filed. (Distributed)

Dec 10 2007 Brief amicus curiae of Wi-LAN, Inc. filed. (Distributed).

Dec 10 2007 Brief amicus curiae of Ibiquity Digital Corporation filed. (Distributed)

Dec 10 2007 Brief amicus curiae of MPEG LA LLC filed. (Distributed)

Dec 10 2007 Brief amici curiae of Interdigital Communications LLC and Tessera, Inc. filed. (Distributed)

Dec 10 2007 Brief amici curiae of Various Law Professors filed. (Distributed)

Dec 10 2007 Brief amicus curiae of Rembrandt IP Management LLC filed. (Distributed)

Dec 10 2007 Brief amicus curiae of Yahoo! Inc. filed. (Distributed)

Dec 10 2007 Brief amicus curiae of AmberWave Systems Corporation filed. (Distributed)

Dec 10 2007	Brief amici curiae of Aerotel, Ltd., Aerotel U.S.A., Inc., and Aerotel U.S.A., LLC filed. (Distributed)
Dec 10 2007	Brief amicus curiae of Technology Properties Limited filed. (Distributed)
Dec 19 2007	Record received from U.S.C.A. for Federal Circuit. (2 boxes)
Dec 26 2007	Record received from U.S.D.C. for the Northern District of California. (11 boxes)
Dec 28 2007	Motion for leave to file reply brief under seal with redacted copies for the public record filed by petitioners Quanta Computer, Inc., et al. (Distributed)
Dec 28 2007	Redacted reply brief of petitioners Quanta Computer, Inc., et al. filed. (Distributed)
Jan 2 2008	Motion DISTRIBUTED for Conference of January 4, 2008.
Jan 7 2008	Motion for leave to file a reply brief under seal with redacted copies for the public record GRANTED.
Jan 11 2008	Letter from counsel for petitioner received. (Distributed)
Jan 16 2008	Argued. For petitioners: Maureen E. Mahoney, Washington, D.C.; and Thomas G. Hungar, Deputy Solicitor General, Department of Justice, Washington, D.C. (for United States, as amicus curiae.) For respondent: Carter G. Phillips, Washington, D.C.
Feb 8 2008	January 15, 2008, letter from counsel for the petitioners filed. (Distributed)
Feb 8 2008	Motion to unseal the reply brief filed by petitioners.
Feb 11 2008	Motion DISTRIBUTED for Conference of February 15, 2008.
Feb 19 2008	Motion to unseal the reply brief GRANTED.

Supreme Court, U.S.
FILED
06-937 NOV 30 2006
OFFICE OF THE CLERK

No.

In the Supreme Court of the United States

QUANTA COMPUTER, INC., QUANTA COMPUTER USA, INC., Q-LITY COMPUTER, INC., COMPAL ELECTRONICS, INC., BIZCOM ELECTRONICS, INC., SCEPTRE TECHNOLOGIES, INC., FIRST INTERNATIONAL COMPUTER, INC. AND FIRST INTERNATIONAL COMPUTER OF AMERICA, INC.,

PETITIONERS,

v.

LG ELECTRONICS, INC.,

RESPONDENT.

ON PETITION FOR A WRIT OF CERTIORARI TO THE UNITED STATES COURT OF APPEALS FOR THE FEDERAL CIRCUIT

PETITION FOR A WRIT OF CERTIORARI

TERRENCE D. GARNETT
VINCENT K. YIP
PETER WIED
PAUL, HASTINGS, JANOFSKY & WALKER LLP
515 SOUTH FLOWER STREET
25TH FLOOR
LOS ANGELES, CA 90071
(213) 683-6000

Counsel for Quanta Computer, Inc., Quanta Computer USA, Inc., Q-Lity Computer, Inc.

MAUREEN E. MAHONEY
Counsel of Record
J. SCOTT BALLENGER
ANNE W. ROBINSON
LATHAM & WATKINS LLP
555 11TH STREET N.W.
SUITE 1000
WASHINGTON, D.C. 20004
(202) 637-2200
Counsel for Petitioners

Additional Counsel Listed on Inside Cover

MAXWELL A. FOX
PAUL, HASTINGS, JANOFSKY
& WALKER LLP
34 F ARK MORI BUILDING
P.O. BOX 577
12-32 AKASAKA 1-CHOME
MINATO-KU, TOKYO 107-6034
JAPAN
813 6229 6100

Counsel for Quanta Computer, Inc., Quanta Computer USA, Inc., Q-Lity Computer, Inc.

RONALD S. LEMIEUX
PAUL, HASTINGS, JANOFSKY
& WALKER LLP
5 PALO ALTO SQUARE
6TH FLOOR
PALO ALTO, CA 94306

Counsel for First International Computer, Inc. and First International Computer of America, Inc.

WILLIAM J. ANTHONY, JR.
ERIC L. WESENBERG
KAI TSENG
MATTHEW J. HULT
ROWENA Y. YOUNG
ORRICK, HERRINGTON
& SUTCLIFFE LLP
1000 MARSH ROAD
MENLO PARK, CA 94025
(650) 614-7400

Counsel for Compal Electronics, Inc., Bizcom Electronics, Inc., Sceptre Technologies, Inc.

QUESTION PRESENTED

Whether the Federal Circuit erred by holding, in conflict with decisions of this Court and other courts of appeals, that respondent's patent rights were not exhausted by its license agreement with Intel Corporation, and Intel's subsequent sale of product under the license to petitioners.

PARTIES TO THE PROCEEDING

Pursuant to Rule 14.1(b), the following list identifies all of the parties appearing here and before the Federal Circuit Court of Appeals.

The petitioners here and appellees and cross-appellants below are Bizcom Electronics, Inc., Compal Electronics, Inc., and Sceptre Technologies, Inc.; Quanta Computer, Inc., Quanta Computer USA, Inc., and Q-Lity Computer, Inc.; and First International Computer, Inc., First International Computer of America, Inc. The additional appellee below was Everex Systems, Inc.

The appellant and cross-appellee below and respondent here is LG Electronics, Inc.

RULE 29.6 STATEMENT

First International Computer, Inc. is the parent company of First International Computer of America, Inc. No other publicly held company owns 10% or more of the stock of either company.

Quanta Computer, Inc. is the parent corporation of Quanta Computer USA, Inc. and Q-Lity Computer, Inc. No other publicly held company owns 10% or more of the stock of any of those companies.

Compal Electronics is the 100% owner of Bizcom Electronics, Inc. Compal Electronics is the only publicly held company owning 10% or more of Sceptre Technologies, Inc.'s stock.

TABLE OF CONTENTS

Page

QUESTION PRESENTED i

PARTIES TO THE PROCEEDING ii

RULE 29.6 STATEMENT iii

TABLE OF CONTENTS iv

TABLE OF AUTHORITIES v

OPINIONS BELOW 1

JURISDICTION 1

CONSTITUTIONAL AND STATUTORY PROVISIONS INVOLVED 1

STATEMENT OF THE CASE 1

REASONS FOR GRANTING THE WRIT 6

I. UNDER THIS COURT'S PRECEDENTS, AN AUTHORIZED SALE EXHAUSTS THE PATENT OWNER'S RIGHTS IN THE SOLD ARTICLE 11

II. THE FEDERAL CIRCUIT HAS EVISCERATED THE PATENT EXHAUSTION DOCTRINE 17

A. LGE's Patent Rights Have Been Exhausted 17

B. The Federal Circuit's Exhaustion Jurisprudence Is Inconsistent With This Court's Precedents And Decisions Of The Other Courts of Appeals 22

III. THIS CASE RAISES QUESTIONS OF NATIONAL IMPORTANCE 28

CONCLUSION 30

TABLE OF AUTHORITIES

Page(s)

CASES

Adams v. Burke,
84 U.S. 453 (1873) 11, 12

Armstrong v. Motorola, Inc.,
374 F.2d 764 (7th Cir. 1967), *cert. denied*, 389 U.S. 830 (1967) 25

Aro Manufacturing Co. v. Convertible Top Replacement Co.,
377 U.S. 476 (1964) 29

Automatic Radio Manufacturing Co. v. Hazeltine Research, Inc.,
176 F.2d 799 (1st Cir. 1949), *aff'd*, 339 U.S. 827 (1950), *overruled on other grounds by Lear, Inc. v. Adkins*, 395 U.S. 653 (1969) 25

Bandag, Inc. v. Al Bolser's Tire Stores, Inc.,
750 F.2d 903 (Fed. Cir. 1984) 5

Bauer & Cie v. O'Donnell,
229 U.S. 1 (1913) 14

Bement v. National Harrow Co.,
186 U.S. 70 (1902) 13

Bloomer v. Millinger,
68 U.S. 340 (1864) 28

Bobbs-Merrill Co. v. Straus,
210 U.S. 339 (1908) 14

Callanan v. Powers,
199 N.Y. 268 (1910) 21

TABLE OF AUTHORITIES—Continued

Page(s)

General Talking Pictures Corp. v. Western Electric Co.,
304 U.S. 175 (1938) 7, 16

Glass Equipment Development, Inc. v. Besten, Inc.,
174 F.3d 1337 (Fed. Cir. 1999) 5

Henry v. A.B. Dick Co.,
224 U.S. 1 (1912) 2, 13, 14, 24

Hensley Equipment Co. v. Esco Corp.,
383 F.2d 252 *amended*, 386 F.2d 442 (5th Cir. 1967) 25

Hewlett-Packard Co. v. Repeat-O-Type Stencil Manufacturing Corp.,
123 F.3d 1445 (Fed. Cir. 1997) 23, 27

In re Yarn Processing Patent Validity Litigation,
541 F.2d 1127 (5th Cir. 1976), *cert. denied*, 433 U.S. 910 (1977) 25

Jazz Photo Corp. v. ITC,
264 F.3d 1094 (Fed. Cir. 2001), *cert. denied*, 536 U.S. 950 (2002) 27

Keeler v. Standard Folding Bed Co.,
157 U.S. 659 (1895) 12, 13, 15, 27, 29

Mallinckrodt, Inc. v. Medipart, Inc.,
15 U.S.P.Q. 2d (BNA) 1113 (N.D. Ill. 1990), *rev'd in part, vacated in part, remanded by* 976 F.2d 700 (Fed. Cir. 1992) 22

Mallinckrodt, Inc. v. Medipart, Inc.,
976 F.2d 700 (Fed. Cir. 1992) ..... *passim*

TABLE OF AUTHORITIES—Continued

Page(s)

Mitchell v. Hawley,
83 U.S. 544 (1873) 12

Motion Picture Patents Co. v. Universal Film Manufacturing Co.,
243 U.S. 502 (1917) 2, 15, 27

Straus v. Victor Talking Machine Co.,
243 U.S. 490 (1917) 14

United States v. General Electric Co.,
272 U.S. 476 (1926) 7, 16, 24, 26

United States v. Masonite Corp.,
316 U.S. 265 (1942) 18

United States v. Univis Lens Co.,
41 F. Supp. 258 (S.D.N.Y. 1941), *aff'd in part and rev'd in part*, 316 U.S. 241 (1942) 21

United States v. Univis Lens Co.,
316 U.S. 241 (1942) ..... *passim*

STATUTES

28 U.S.C. § 1254(1) 1

35 U.S.C. § 271(a) 1

OTHER AUTHORITY

Thomas Arno, *Use Restrictions and the Retention of Property Interests in Chattels Through Intellectual Property Rights*, 31 San Diego L. Rev. 279 (1994) 19

TABLE OF AUTHORITIES—Continued

Page(s)

Julie E. Cohen & Mark Lemley, *Patent Scope and Innovation in the Software Industry*, 89 Cal. L. Rev. 1, 33-34 (2001) 20, 24

Arthur J. Gajarsa et al., How Much Fuel to Add to the Fire of Genius? Some Questions About the Repair/Reconstruction Distinction in Patent Law, 48 Am. U. L. Rev. 1205, 1229-30 (1999) 9

James B. Kobak, Jr., *Contracting Around Exhaustion: Some Thoughts About the CAFC's Mallinckrodt Decision*, 75 J. Pat. & Trademark Off. Soc'y 550, 554 (1993) 9, 20, 26, 28, 30

Restatement (Second) of Contracts § 384 (1981) 21

Richard H. Stern, *The Unobserved Demise of the Exhaustion Doctrine in U.S. Patent Law: Mallinckrodt v. Medipart*, 15 Eur. Intell. Prop. Rev. 460, 461 (1993) 9, 11, 24, 25, 26

OPINIONS BELOW

The opinion of the U.S. Court of Appeals for the Federal Circuit (Pet. App. 1a-25a) is reported at 453 F.3d 1364. Three opinions of the district court are relevant. The first (Pet. App. 26a-51a) is unreported. The second (Pet. App. 52a-61a) is reported at 248 F. Supp. 2d 912. The third (Pet. App. 62a-81a) is unreported.

JURISDICTION

The Federal Circuit denied a petition for rehearing or rehearing *en banc* on September 1, 2006. Pet. App. 82a-83a. This Court has jurisdiction under 28 U.S.C. § 1254(1).

CONSTITUTIONAL AND STATUTORY PROVISIONS INVOLVED

"[W]hoever without authority makes, uses, offers to sell, or sells any patented invention, within the United States or imports into the United States any patented invention during the term of the patent therefor, infringes the patent." 35 U.S.C. § 271(a).

STATEMENT OF THE CASE

Respondent LG Electronics, Inc. ("LGE") purchased a portfolio of patents for [redacted] and now contends that those patents are infringed by every computer in the world, whenever microprocessors and chipsets are combined with generic components such as busses and memory. A year after its purchase, LGE resolved its standoff with Intel Corporation ("Intel") by negotiating a [redacted] license payment from Intel that gave Intel an unrestricted right to "make, use, [and] sell" products incorporating LGE's patents. LGE insisted, however, that Intel send a "notice" to its own customers purporting to inform them that Intel's license did not protect *them* from infringement suits if they actually used microprocessors or chipsets purchased from Intel in a computer. The district court correctly found that Intel had every right under its license to make and sell chips to petitioners—and that the only reasonable use of those products was to incorporate them into computers in the manner that LGE now contends is infringing.

Under the patent exhaustion doctrine that this Court has applied for more than 90 years—since *Henry v. A.B. Dick Co.*, 224 U.S. 1 (1912), was overruled by *Motion Picture Patents Co. v. Universal Film Manufacturing Co.*, 243 U.S. 502 (1917)—an authorized first sale of a patented article exhausts the patent owner's rights in that article, and nullifies any "conditions" that the patent owner has tried to attach to its use or resale. Beginning with its decision in *Mallinckrodt, Inc. v. Medipart, Inc.*, 976 F.2d 700 (Fed. Cir. 1992), however, the Federal Circuit has steadily eroded the exhaustion doctrine. In this decision the Federal Circuit held that exhaustion is entirely optional, and easily nullified by a "notice" announcing that the patent owner would prefer that it not apply. That is an unprecedented and extremely dangerous expansion of the patent monopoly, in direct conflict with numerous decisions of this Court.

This case is important on several levels. First, on these specific facts LGE is now holding the entire computer industry hostage for billions of dollars in duplicative royalties, on patents that under this Court's precedents have clearly been exhausted. Second, on a broader level the Federal Circuit's new jurisprudence of "notice" restrictions threatens to usher in a new era of servitudes and restraints on alienation running with chattels, by which patent owners attempt to suppress competition and control the use of patented goods after an authorized first sale. If LGE's tactics are not rejected now, they are likely to spread through the economy like the common cold—producing decades of litigation over "notice" restrictions stamped on sold goods such as "single use only," "for use only with Microsoft software," "cannot be resold for less than $1000," and anything else that patent owners can dream up.

Statement of Facts

The basic facts are undisputed. On May 3, 1999, LGE purchased a portfolio of more than [redacted] U.S. and foreign patents and patent applications for less than [redacted] in

contemporary U.S. dollars. A4701.028; A4701.070-4701.079.[1] LGE contends that every computer that contains Intel chips infringes up to four of these patents. (LGE also contends that computers containing *non-Intel* chips infringe, but those computers are not at issue in this petition.)

Petitioners are original equipment manufacturers of computers and file servers, who purchase licensed microprocessors and chipsets from Intel and incorporate them into computers in exact accordance with the specifications they receive from Intel. Petitioners in no way modify the chips after purchasing them and, indeed, have no choice but to follow Intel's specifications because they have no way of knowing the specifics of the chips' internal designs, which Intel protects as trade secrets. Once Intel's chips are incorporated into them, the computers petitioners make are then sold in the U.S. and around the world to companies such as Dell, HP, IBM, and Gateway.

Under pressure from LGE's extraordinary infringement claims, on September 7, 2000 Intel agreed to pay LGE [redacted], in exchange for the complete and unrestricted right to make, use, sell, offer to sell, import or otherwise dispose of its own products free from LGE's patent claims. A3605-3632(§3.2); A3578.142-3578.143(¶¶6,7). The "make, use, [and] sell" phrasing is a term of art in patent law, which encompasses the entire scope of the exclusionary rights granted to a patent owner. Nonetheless, in a separate agreement with LGE, Intel agreed to send a "notice" to its own customers, purporting to inform them that they did not receive any "license" from LGE to use products purchased from Intel in any product made "by combining an Intel product with any non-Intel product." A3632. In its own license agreement, however, Intel negotiated a proviso that "[n]otwithstanding anything to the contrary contained in this Agreement, the

---

[1] All citations to record evidence are to material in the Joint Appendix ("A") that was before the Federal Circuit.

parties agree that nothing herein shall in any way limit or alter the effect of patent exhaustion that would otherwise apply when a party hereto sells any of its Licensed Products." A3614(¶3.8). The separate agreement under which Intel agreed to send the "notice" to its customers also provides that "a breach of this Agreement shall have no effect on and shall not be grounds for termination of the Patent License." A3622(¶1).

Pursuant to its side agreement with LGE, and *after* many of the sales at issue here had already occurred, Intel sent the demanded "notice" letter to petitioners. LGE sued petitioners, alleging that they cannot actually use the computer chips they bought from Intel in any computer (even though the chips were made and sold under a valid license, and even though their use is the one called for by Intel's own specifications) without infringing LGE's patents. Petitioners have no way to evaluate that claim because, again, Intel protects the design and operation of its chips as a trade secret. LGE has also targeted more than 70 other major companies whom it insists must pay it a second round of royalties before they may use Intel chips in computers.

Proceedings Below

Between late 2000 and Spring 2001, LGE brought separate suits against petitioners in the United States District Court for the Northern District of California, alleging that petitioners (and another company with whom LGE has since settled) infringe six of LGE's patents on computer technology. The District Court consolidated all of the cases for pretrial purposes. Five of the original patents at issue (U.S. Patent Nos. 4,918,645, 4,939,641, 5,077,733, 5,379,379 and 4,926,419) relate to technology allegedly used in microprocessors and memory controllers made by Intel and its competitors. Following the Court's claim construction decision, LGE dropped its allegations of infringement with respect to U.S. Patent No. 4,926,419, leaving four Intel-related patents at issue. In the District Court, LGE contended that the essential features of these four patents are found in Intel's chips, and that the patents

are infringed by merely combining Intel chips with generic components such as busses and memory.

On August 20, 2002, the District Court issued a carefully reasoned opinion and Order granting petitioners' motion for partial summary judgment of non-infringement on the ground that LGE's unrestricted license to Intel and Intel's subsequent sale of chips to petitioners exhausted LGE's rights to recover royalties with respect to those chips. Pet. App. 32a-45a. The district court found as a fact that, if LGE's broad infringement contentions were correct, there could be no reasonable use of Intel's chips that did not infringe LGE's patents. *Id.* at 45a-49a. Relying on the patent exhaustion doctrine discussed at length in this Court's decision in *United States v. Univis Lens Co.*, 316 U.S. 241 (1942), the District Court held that LGE's patent rights had been exhausted and that LGE's demand for additional royalties from petitioners was an impermissible attempt to extend the patent monopoly and obtain a double royalty on the same patents. *Id.* at 50a, 40a, 32a.

LGE requested reconsideration, and the District Court issued another Order on February 6, 2003, upholding the finding of exhaustion with respect to LGE's apparatus claims but holding that the *method* claims in those same patents were not exhausted even though they essentially covered the mere use of the device claimed in the exhausted apparatus claims. *Id.* at 57a-61a. It concluded that method claims could never be exhausted, relying on language from two Federal Circuit decisions, *Bandag, Inc. v. Al Bolser's Tire Stores, Inc.*, 750 F.2d 903, 924 (Fed. Cir. 1984), and *Glass Equipment Development, Inc. v. Besten, Inc.*, 174 F.3d 1337, 1341 n.1 (Fed. Cir. 1999). *Id.* at 61a.

In Spring 2004, petitioners moved for summary judgment of non-infringement. The District Court granted petitioners' motion in late 2004 and entered a final judgment against LGE in January 2005. LGE appealed each of the District Court's rulings to the Federal Circuit. Petitioners cross-appealed on several grounds, including the holding that LGE's method claims were not exhausted.

On appeal, petitioners argued, *inter alia*, that LGE cannot nullify the patent exhaustion resulting from LGE's unrestricted license to Intel and Intel's subsequent licensed sales to petitioners simply by having Intel notify petitioners, post-sale in some instances, that they do not receive a license from LGE to use the products purchased from Intel for their only reasonable use. Petitioners argued that, because LGE imposed no restrictions on Intel's rights to practice the licensed patents (and, indeed, explicitly recognized the applicability of the patent exhaustion doctrine in the license agreement), LGE cannot ignore the unrestricted license it granted to Intel and attempt to restrict the activities of Intel's *customers*.

The Federal Circuit reversed. It held that the patent exhaustion doctrine applies only to "unconditional" sales, and that the "notice" Intel agreed to send to its customers imposed a "condition" on the sale that the patent exhaustion doctrine would not apply. Pet. App. 5a-6a. The Federal Circuit implied that petitioners had agreed to such a "condition" by failing to object to Intel's "notice" under New York's version of the U.C.C. "battle of the forms" provision, *Id.* at 6a. (The Federal Circuit did not actually discuss New York law, or explain why New York law should govern). It also held that, even if the sales in question were not "conditional," the exhaustion doctrine would not apply to LGE's method claims because "the sale of a device does not exhaust a patentee's rights in its method claims." *Id.*

REASONS FOR GRANTING THE WRIT

This Court has consistently held for more than a century that no patent owner is entitled to more than one royalty on the sale of a patented article, and that an authorized first sale fully exhausts the patent owner's rights with respect to that article during its ordinary useful life. The patent owner's "monopoly remains so long as he retains the ownership of the patented article. But sale of it exhausts the monopoly in that article and the patentee may not thereafter, by virtue of his patent, control the use or disposition of the article." *Univis Lens*, 316 U.S. at 250. An

authorized sale exhausts the patent owner's rights in any device patents infringed by the article itself, and in any method or combination patents that will be infringed by the only reasonable use of the sold article. "An incident to the purchase of any article, whether patented or unpatented, is the right to use and sell it, and upon familiar principles the authorized sale of an article which is capable of use only in practicing the patent is a relinquishment of the patent monopoly with respect to the article sold." *Id.* at 249. Consistent with those principles, this Court has held that purchasers may not be sued for patent infringement for violating a "notice" that purports to restrict the usage or resale of goods after an authorized sale.

By contrast, a patent owner *may* place restrictions on manufacturing licensees. As this Court explained in 1926,

> [i]t is well settled ... that where a patentee makes the patented article and sells it, he can exercise no further control over what the purchaser may wish to do with the article after his purchase. It has passed beyond the scope of the patentee's rights. But the question is a different one ... when we consider what a patentee who grants a license to one to make and vend the patented article may do in limiting the licensee in the exercise of the right to sell.

United States v. Gen. Elec. Co., 272 U.S. 476, 489-90 (1926) (citations omitted). Just as a patent owner who manufactures its own product may decide to whom it will sell, a patent owner may (within limits imposed by antitrust and misuse law) tell its licensees which customers they may sell to—and may enforce knowing violations of such restrictions through infringement suits. *See, e.g., Gen. Talking Pictures Corp. v. W. Elec. Co.*, 304 U.S. 175, 181 (1938). A sale made in violation of a valid license restriction is not an authorized sale, and does not trigger exhaustion.

Unfortunately, this Court's early exhaustion cases are notoriously confusing, and this Court has not spoken to the issues for more than half a century. The distinction between *sales* and *licenses* has also been muddied by the advent of

computer software. Because a new, potentially infringing, "copy" of computer software is created every time that software is loaded into memory, software must always be licensed, not sold. Software makers have taken advantage of the resulting opportunity to impose various use and resale restrictions in their licenses. But physical goods like cars and toasters and books cannot be burdened with "notices" providing that they may be used only in particular ways, or cannot be resold, because the patent exhaustion doctrine, and similar "first sale" doctrines in copyright and other areas of intellectual property law, prohibit restraints on use or alienation after a valid sale.

In a series of decisions beginning 14 years ago with *Mallinckrodt* and culminating here, the Federal Circuit has eviscerated all of these traditional distinctions. In this case it is undisputed that Intel *sold* microprocessors and chipsets to petitioners—*i.e.*, petitioners did not *license* anything. It is undisputed that all of those sales were fully authorized by LGE through the license it gave to Intel. The district court also correctly found that the sold products have no reasonable use that would not infringe the combination and method patents that LGE now seeks to enforce. On traditional principles, there has been an authorized first sale and LGE's patent rights are exhausted. Instead, the Federal Circuit held that the exhaustion doctrine applies only to "unconditional" sales, and that these sales were "conditional" because the circumstances indicated that LGE did not intend to convey an "implied license" to petitioners.

That holding is a nonsensical jumble of mismatched principles. Licenses may be conditional, but there has been no such thing as a conditional *sale* since this Court overruled *A.B. Dick* in 1917. Petitioners do not need a license, implied or otherwise, because LGE's patents have been exhausted. That is not a question of what LGE intended, but of the substantive scope of the patent monopoly. Exhaustion has never (until now) been just a default rule that patentees could opt out of by sending a "notice" to purchasers.

The *Mallinckrodt* decision and its progeny have been

the subject of harsh scholarly criticism. One commentator pointed out that it "overrul[ed] a century of Supreme Court decisional law under the exhaustion doctrine." Richard H. Stern, *The Unobserved Demise of the Exhaustion Doctrine in U.S. Patent Law: Mallinckrodt v. Medipart*, 15 Eur. Intell. Prop. Rev. 460, 461 (1993). He was led to wonder whether "the Federal Circuit panel simply ha[d] its own notion of whether it or the Supreme Court is in charge?" *Id.* at 464. Another wrote that the Federal Circuit has "vitiate[d] a distinction between sale and license which had grown to be well accepted" and "create[d] a confusing *melange* in which exhaustion, misuse, and antitrust principles are all conflated although all have somewhat different origins and purposes." James B. Kobak, Jr., *Contracting Around Exhaustion: Some Thoughts About the CAFC's Mallinckrodt Decision*, 75 J. Pat. & Trademark Ofl. Soc'y 550, 554 (1993). Even Judge Gajarsa worried in print that this line of precedent from his own court could usher in a "conceptual collapse of contract law and property law." Arthur J. Gajarsa et al., *How Much Fuel to Add to the Fire of Genius? Some Questions About the Repair/ Reconstruction Distinction in Patent Law*, 48 Am. U. L. Rev. 1205, 1229-30 (1999) (capitalization altered).

The facts of this case illustrate the pernicious consequences of the Federal Circuit's new, optional version of the exhaustion doctrine. LGE purchased these patents as part of a portfolio of [redacted] different patents and patent applications, for which it paid less than [redacted]. Intel paid LGE approximately [redacted] for a license that gives Intel an unlimited right to practice the patents. LGE now contends that Intel's *customers* need to pay LGE again before incorporating those microprocessors and chipsets into computers—which is, of course, their only reasonable use. LGE contends that every computer in the world infringes these patents, and is attempting to shake down the entire computer industry for several billion dollars in duplicative licensing fees. If computer manufacturers relent and agree to purchase a license from LGE, LGE may next

insist that they too send a "notice" informing consumers that they do not have any "implied license" from LGE, and must obtain a third license before turning any computer on. This is precisely the sort of mischief that the patent exhaustion doctrine has always been designed to prevent.

More broadly, the Federal Circuit's new jurisprudence threatens to kick off a new era of "notices" attached to sold goods. Obvious candidates include "single use only," "no use outside of Massachusetts," "no repair," "no resale," or "no resale for less than the price of purchase." Under the Federal Circuit's rule, patent owners may use such notices to extend territorial division and resale price maintenance schemes from distributors down to end consumers, and to eliminate competition from aftermarket resales of the patented good. Violation of such arbitrary restrictions will subject the consumer to the full range of damages available under the patent laws for infringement. The Federal Circuit has suggested that some notices may not be effective, if they are not "reasonably within the patent grant" or "venture[] beyond the patent grant and into behavior having an anticompetitive effect not justifiable under the rule of reason." *Mallinckrodt*, 976 F.2d at 708. Against the backdrop that traditional patent law would not have permitted *any* of these conditions, such vague caveats are (at best) an invitation to decades of wasteful litigation.

The Federal Circuit's holding in this case is flatly inconsistent with precedents of this Court and other courts of appeals, and expands the patent monopoly beyond all reasonable bounds. It threatens to entangle the free flow of commerce with restraints on the use and alienation of chattels that have not been permitted by this Court for almost 90 years. And the Federal Circuit's exclusive jurisdiction over patent appeals means that further percolation in the lower courts is now impossible. This Court's intervention is urgently needed.

I. UNDER THIS COURT'S PRECEDENTS, AN AUTHORIZED SALE EXHAUSTS THE PATENT OWNER'S RIGHTS IN THE SOLD ARTICLE

It has been clear since at least 1917 that an authorized first sale of a patented article exhausts the patent holder's rights in that article, and that "notices" purporting to reserve such rights are void. As one commentator put it:

> Until the Federal Circuit's *Mallinckrodt* decision, an unbroken line of Supreme Court and lower court precedents held that the patentee's patent right over a product that the patentee sold (or that a licensee authorised to make a sale sold) ended at the point of sale. Accordingly, a customer did not commit patent infringement by disobeying a notice, contract, or other "remote control" limitation that the patentee sought to impose on the use of goods that it had sold to the customer.

Stern, 15 Eur. Intell. Prop. Rev. at 461. The doctrine took several twists and turns during its early development, however, so an overview of this Court's cases is essential to understanding where the Federal Circuit has gone astray.

The tension and confusion in the early cases is illustrated by two decisions of this Court from 1873. In *Adams v. Burke*, 84 U.S. 453 (1873), widely regarded as the leading case on patent exhaustion, the owner of a patent on coffin lids granted exclusive territories to various dealers. When an undertaker purchased coffin lids within one territory and used them in another, the patent owner sued for infringement. This Court rejected that claim, holding that:

> in the essential nature of things, when the patentee, or the person having his rights, sells a machine or instrument whose sole value is in its use, he receives the consideration for its use and he parts with the right to restrict that use. The article, in the language of the court, passes without the limit of the monopoly. That is to say, the patentee or his assignee having in the act of sale received all the royalty or consideration which he claims for the use

> of his invention in that particular machine or instrument, it is open to the use of the purchaser without further restriction on account of the monopoly of the patentees.

Adams, 84 U.S. at 456 (footnote omitted).

On the other hand, in *Mitchell v. Hawley*, 83 U.S. 544 (1873), that same year, the defendants had bought patented machines from the patent owner's licensee. The seller's license agreement provided that he had no authority to "'dispose of, sell, or grant any license to use the said machines beyond the expiration' of the original [patent] term." 83 U.S. at 549. When the patent term was later extended and purchasers continued using the machines during the extension period, the patent owner sued them for infringement. This Court reasoned that patented goods may be sold "with or without conditions," *id.* at 548, and that because the licensee had no title or authority to grant any right to use the patent beyond the original term, purchasers from him could not have acquired such a right, *id.* at 550-51.

After *Adams* and *Mitchell* the exhaustion doctrine remained unsettled for decades. In *Keeler v. Standard Folding Bed Co.*, 157 U.S. 659 (1895), this Court considered an exclusive territories case very similar to *Adams*, with the wrinkle that the licensee *knew* that the purchaser intended to use the goods outside of his territory. This Court held that the seller's knowledge was irrelevant, and that a

> brief history of the cases shows that ... as between the owner of a patent on the one side, and a purchaser of an article made under the patent on the other, the payment of a royalty once, or, what is the same thing, the purchase of the article from one authorized by the patentee to sell it, emancipates such article from any further subjection to the patent throughout the entire life of the patent.

157 U.S. at 666. This Court held that under patent law "one who buys patented articles of manufacture from one authorized to sell them becomes possessed of an absolute property in such articles, unrestricted in time or place." *Id.*

It noted that "[w]hether a patentee may protect himself and his assignees by special contracts brought home to the purchasers is not a question before us, and upon which we express no opinion." *Id.* But this Court emphasized that "[i]t is, however, obvious that such a question would arise as a question of contract, and not as one under the inherent meaning and effect of the patent laws." *Id.* That clarification appears to be inconsistent with *Mitchell*, which suggested that conditions imposed on end-users could be enforced *under the patent laws*, via suits for infringement.

The early cases were much less ambivalent about conditions imposed on *manufacturing licensees*, restricting the terms under which they were authorized to make and sell the product. In *Bement v. National Harrow Co.*, 186 U.S. 70, 91 (1902), for example, this Court stated that "the rule is, with few exceptions, that any conditions which are not in their very nature illegal with regard to this kind of property, imposed by the patentee and agreed to by the licensee for the right to manufacture or use or sell the article, will be upheld by the courts." In *Bement* this Court upheld a resale price restriction imposed on a manufacturing licensee. "The owner of a patented article can, of course, charge such price as he may choose, and the owner of a patent may assign it or sell the right to manufacture and sell the article patented upon the condition that the assignee shall charge a certain amount for such article." *Id.* at 93.

These cross-currents came to a head in *A.B. Dick* in 1912. The patentee sold a mimeograph machine stamped with a notice that said "This machine is sold by the A.B. Dick Co. with the license restriction that it may be used only with the stencil paper, ink, and other supplies made by A.B. Dick Company, Chicago, U.S.A." 224 U.S. at 11. A supplier who sold ink to a purchaser of the machine was sued for contributory infringement, and defended on the ground that the restriction was either invalid on exhaustion grounds or (as suggested in *Keeler*) at most enforceable only in an action for breach of contract. This Court rejected those arguments, and in the process recast the entire exhaustion

doctrine as a waivable *implied license* to use the product. "If sold unreservedly the right to the entire use of the invention passes, because that is the implied intent; but this right to use is nothing more nor less than an unrestricted license presumed from an unconditional sale." *Id.* at 24. But this Court reasoned that "if the right of use be confined by specific restriction, the use not permitted is necessarily reserved to the patentee," and that "[i]f that reserved control of use of the machine be violated, the patent is thereby invaded." *Id.* at 24-25. So long as the purchaser had notice, this Court indicated (citing *Bement*) that virtually any condition imposed on purchasers would be upheld. *Id.* at 47. This Court viewed the restriction in *A.B. Dick* as a legitimate adjunct to the patent owner's strategy for capitalizing on his patent, which was apparently to sell the machines at cost and make money on the ink. *Id.* at 32.

The clear rule of *A.B. Dick* was, however, extremely short-lived. The next year, in *Bauer & Cie v. O'Donnell*, 229 U.S. 1 (1913), this Court held that a "notice" stating that the product "is licensed by us for sale and use at a price not less than one dollar" could not be enforced against retailers selling the product for less. This Court noted that it had refused to enforce similar notices under the copyright statute, on the ground that an authorized first sale of a book exhausts the copyright, *see Bobbs-Merrill Co. v. Straus*, 210 U.S. 339 (1908), and reasoned that "there is a strong similarity between and identity of purpose in the two statutes" in their implementation of the exclusive right to *sell* the patented or copyrighted good. *Bauer*, 229 U.S. at 12-13. This Court distinguished *A.B. Dick* as involving a restriction on the purchaser's right to *use*, which has no equivalent in the copyright statute. *Id.* at 13-15. It also dismissed as a "mere play on words" and "perversion of terms" the patent owner's attempt to cast the restriction as a limitation on *use* as opposed to *resale*. *Id.* at 16; *see also Straus v. Victor Talking Mach. Co.*, 243 U.S. 490, 498 (1917) (use notice was "a disguised attempt to control the prices of its machines after they have been sold and paid for").

The *A.B. Dick* rule was laid completely to rest in 1917 in *Motion Picture Patents*, in which a notice purported to restrict movie projectors to use only with film leased from the patent owner, and subject to "other terms to be fixed by the [patent owner]." 243 U.S. at 506. This Court stated that the issue, "which is arising with increasing frequency in recent years," was "the extent to which a patentee or his assignee is authorized ... to prescribe by notice attached to a patented machine the conditions of its use ..., under pain of infringement of the patent." *Id.* at 509. This Court noted that *A.B. Dick* and its predecessors had "led to an immediate and widespread adoption" of use restrictions, which had evolved in this case into "[t]he perfect instrument of favoritism and oppression." *Id.* at 515. This Court cited with approval the reasoning of *Bauer* that, by analogy to copyright, "the right to vend is exhausted by a single, unconditional sale." *Id.* at 516. But this Court abandoned *Bauer*'s attempt to preserve the holding of *A.B. Dick* by distinguishing "use" rights from "vend" rights. "The statutory authority to grant the exclusive right to 'use' a patented machine is not greater, indeed it is precisely the same, as the authority to grant the exclusive right to 'vend'" the patented article. *Id.* This Court held that the notice was invalid, and that *A.B. Dick* was expressly overruled. *Id.* at 518. It also endorsed the earlier reasoning from *Keeler* that "[t]he extent to which the use of the patented machine may validly be restricted to specific supplies or otherwise by special contract between the owner of a patent and the purchaser or licensee is a question outside the patent law," and that any such right "must be derived from the general [contract law] and not from the patent law." *Id.* at 509 (citing *Keeler*, 157 U.S. at 659); *see also id.* at 513.

Although *Motion Picture Patents* indicated that "notice" restrictions imposed on *purchasers* are (by analogy to copyright) not enforceable through infringement suits, this Court remained receptive to explicit conditions imposed on manufacturing *licensees*. In *General Electric*, this Court explained that it was "well settled" that a patent owner "can

exercise no future control over what the purchaser may wish to do with the article" after an authorized sale, but that "the question is a different one which arises when we consider what a patentee who grants a license to one to make and vend the patented article may do in limiting the licensee in the exercise of the right to sell." 272 U.S. at 489-90. This Court explained that *Motion Picture Patents* had overruled *A.B. Dick* but not *Bement*, and that the cases invalidating restrictions on purchasers did not apply to restrictions in manufacturing licenses. *Id.* at 493. Cases like *Bauer* and *Victor Talking Machine*, this Court wrote, "are only instances of the application of the principle of *Adams v. Burke* ... that a patentee may not attach to the article made by him, or with his consent, a condition running with the article in the hands of purchasers." *Id.* at 493-94.

In *General Talking Pictures* in 1938, this Court held that if a purchaser knowingly buys from a manufacturing licensee in violation of a restriction in the license, both the licensee and the purchaser may be sued for infringement. This Court explained that a sale that is not authorized by the license is not a sale "made under the patents," and that therefore the purchaser was not "a purchaser in the ordinary channels of trade" and exhaustion did not apply. 304 U.S at 180-81. This Court thus declined to consider whether a use restriction stamped on the product could have been enforced against an *authorized* purchaser. *Id.* at 182.

This Court's last significant pronouncement on the exhaustion doctrine is *Univis Lens*. Univis Lens owned several patents for making eyeglass lenses. It produced lens blanks, and sold them to three categories of licensees. Wholesalers ground the lenses and resold them to prescription retailers. Finishing retailers ground their own lenses, mounted them in glasses, and sold directly to consumers. Prescription retailers purchased ground lenses from wholesalers, mounted them into glasses, and sold them to consumers. Univis Lens had license agreements with all three groups that restricted to whom, and for how much, they could sell. It took all its profits from a 50-cent royalty

on each lens blank it sold. 316 U.S. at 243-45. This Court held that the price restrictions in the licenses "derive[d] no support from the patent" and were invalid. *Id.* at 251.

This Court emphasized that "where the sale of the blank is by the patentee or his licensee ... to a finisher, the only use to which it could be put and the only object of the sale is to enable the latter to grind and polish it for use as a lens by the prospective wearer." *Id.* at 249. It explained that "upon familiar principles the authorized sale of an article which is capable of use only in practicing the patent is a relinquishment of the patent monopoly with respect to the article sold," *id.*, and that "sale of it exhausts the monopoly in that article and the patentee may not thereafter, by virtue of his patent, control the use or disposition of the article," *id.* at 250. This Court therefore held that the sale of the lens blanks to wholesalers and finishers exhausted the patent holder's rights. "[W]here one has sold an uncompleted article which, because it embodies essential features of his patented invention, is within the protection of his patent, and has destined the article to be finished by the purchaser in conformity to the patent, he has sold his invention so far as it is or may be embodied in that particular article." *Id.* at 250-51. *Univis Lens* remains the authoritative precedent from this Court on exhaustion.

II. THE FEDERAL CIRCUIT HAS EVISCERATED THE PATENT EXHAUSTION DOCTRINE

A. LGE's Patent Rights Have Been Exhausted

The Federal Circuit held in this case that LGE's patent rights were not exhausted because LGE's license to Intel, and Intel's sale to petitioners, were "conditional." The "condition" in question was LGE's purported reservation of the right to sue petitioners for infringement if they did not obtain a separate license from LGE. In other words, LGE authorized Intel to "make, use, [and] sell" its products subject to the "condition" that such sales would not exhaust LGE's patent rights as against downstream purchasers. That holding is inconsistent with *Univis Lens*. Indeed, the Federal Circuit has embraced the discredited reasoning of

A.B. Dick, which this Court overruled nearly a century ago.

It is undisputed that the products at issue—chipsets and microprocessors—were *sold* by Intel to petitioners under the authority of Intel's license from LGE. Neither LGE nor the Federal Circuit have ever suggested that Intel's sales to petitioners were unauthorized and constituted infringement, as in *General Talking Pictures*. The district court also correctly found that these products have no reasonable use that would not infringe the combination and method patents that LGE now seeks to enforce. The Federal Circuit did not disagree. "[U]pon familiar principles the authorized sale of an article which is capable of use only in practicing the patent is a relinquishment of the patent monopoly with respect to the article sold." *Univis Lens*, 316 U.S. at 249. And the chips sold by Intel clearly embraced the "essential features" of the asserted patents, which LGE contends are infringed merely by combining the chips with generic components such as memory. *Id.* at 250-51. LGE's patent rights have actually been exhausted twice, because (as the Federal Circuit acknowledged) a license granting the complete right to "make, use, [and] sell" also "constitutes a sale for exhaustion purposes." Pet. App. 5a. (citing *United States v. Masonite Corp.*, 316 U.S. 265, 278 (1942)).

The Federal Circuit reasoned that exhaustion applies only after an "unconditional sale," *id.*, and that both of the sales here were "conditional" because Intel separately promised to send its customers a notice informing them that they were not licensed by LGE to use products purchased from Intel in combination with non-Intel components (i.e., for their only reasonable use). But that is flatly inconsistent with *Univis Lens*. The purchasers in *Univis Lens* were bound by explicit license agreements in which they made a variety of promises that restricted their use and resale of the patented goods. In the Federal Circuit's rubric, those sales were clearly "conditional." Nonetheless this Court held that all of those "conditions" were void because the patent owner had sold a component that was "capable of use only in practicing the patent," which "upon familiar

principles ... is a relinquishment of the patent monopoly with respect to the article sold." 316 U.S. at 249. The notice sent by Intel to petitioners therefore purports to reserve rights in LGE that, as a matter of law, simply do not exist.

Even if "conditions" on the use of sold goods were sometimes enforceable, the Federal Circuit's reasoning in this case would be deeply flawed. Indeed, this decision illustrates the extent to which the Federal Circuit will distort legal principles in order to maximize patent rights.

First, a "condition" that purchasers not use a product for its only reasonable use is absurd and unconscionable. Even commentators friendly to permitting servitudes on chattels recognize that such restrictions could be justified only as a way to facilitate price discrimination between higher and lower valued uses. *See* Thomas Arno, *Use Restrictions and the Retention of Property Interests in Chattels Through Intellectual Property Rights*, 31 San Diego L. Rev. 279 (1994). A restriction purporting to bar usage of a product for its *only* reasonable use is a confession of contractual bad faith, and serves no social purpose whatsoever. This Court recognized as much in *Univis Lens*, when it held that a sale of the product necessarily exhausted any patent covering its sole reasonable use—even though the parties' actual agreements and expectations were plainly to the contrary.

Second, the first sale here (LGE's grant of a complete license to "make, use, [and] sell" to Intel) was not conditional at all, and even if it was, the conditions were satisfied. Intel's promise to send a "notice" to purchasers informing them of LGE's legal position was not a condition of Intel's license; it does not even appear in the license but instead in a separate agreement between Intel and LGE, which also specified that "[t]he parties agree that a breach of this Agreement shall have no effect on and shall not be grounds for termination of the Patent License." A3622(¶1). Regardless, it is undisputed that Intel kept its promise.

Third, the second sale (from Intel to petitioners) was also unconditional. Perhaps recognizing that patent holders are no longer permitted to unilaterally restrict the usage of

sold goods as a matter of patent law, the Federal Circuit strains to find a *contractual promise* by petitioners not to use the products without securing a license from LGE. But the district court correctly found that "Defendants' purchase of microprocessors and chipsets from Intel was in no way conditioned on their agreement not to combine the Intel microprocessors and chipsets with other non-Intel parts and then sell the resulting products," and that while the notice letter might negate the implication of an implied license it "is not sufficient to transform what would otherwise be the unconditional sale of the microprocessors and chipsets into a conditional one." Pet. App. 58a, 59a.

In cases like this, the Federal Circuit reflexively invokes the U.C.C. "battle of the forms" provision to find an enforceable contract, without actually examining the relevant state law. *See, e.g., Mallinckrodt*, 976 F.2d at 708 n.7. As commentators have pointed out, the Federal Circuit "can reach that result only by mutilating contract law." Julie E. Cohen & Mark Lemley, *Patent Scope and Innovation in the Software Industry*, 89 Cal. L. Rev. 1, 33-34 (2001).[2] But the more critical point is that even if there were a contractual promise by petitioners not to use these products for their only reasonable use, the enforceability and effect of that promise would—as explained in *Keeler* and *Motion Picture Patents*—be a question for general contract law. Breach of contract might give rise to an action for contract damages, but not for patent infringement. By suing for infringement the patentee is not seeking to enforce

---

[2] The Federal Circuit assumes that the patent holder is the accepting rather than offering party in the "battle of the forms," even though "the opposite conclusion seems more logical." 89 Cal. L. Rev. at n.130. It also ignores the statutory proviso that such terms become part of the contract only if they do not "materially alter" the bargain. *Id.* A promise not to use the product for its only reasonable purpose is clearly material. *See* Kobak, 75 J. Pat. & Trademark Off. Soc'y at 563 n.50. Petitioners buy these chips to incorporate them into computers, which are then sold; the idea that they can be retroactively liable for infringement because of a notice received *later* is outrageous, and clearly a material alteration.

any contract promise, but to rescind the authorized sale and proceed under what the law would have been absent the contract. But rescission requires a "material" breach, which under New York law means a breach "so substantial and fundamental as to strongly tend to defeat the object of the parties in making the contract." *Callanan v. Powers*, 199 N.Y. 268, 284 (1910). Obviously any such promise was not the principal "object" of the contract between Intel and LGE. And under basic principles of restitution and election of remedies, a party seeking rescission must also give up the benefits of the contract and attempt to restore the *status quo ante* so far as is possible. *See, e.g.*, Restatement (Second) of Contracts § 384 (1981). The Federal Circuit allows the patent holder to retain all of the benefits of its bargain while pretending that the license contract does not exist. That is wholly inconsistent with contract principles.

Finally, the Federal Circuit also held in this case that even if these sales *were not* "conditional," exhaustion would not apply to LGE's method patent claims because "the sale of a device does not exhaust a patentee's rights in its method claims." Pet. App. 6a. That too is inconsistent with *Univis Lens*. At least one of the patents held exhausted in *Univis Lens* was a pure method patent. *See United States v. Univis Lens Co.*, 41 F. Supp. 258, 262-63 (S.D.N.Y. 1941) (explaining that asserted U.S. Patent No. 1,869,769 covered "only a method for producing a lens to eliminate prismatic imbalance"), *aff'd in part and rev'd in part*, 316 U.S. 241 (1942). This Court's holding was that "the authorized sale of an article which is capable of use only in practicing the patent is a relinquishment of the patent monopoly with respect to the article sold." 316 U.S. at 249.

The Federal Circuit's decision in this case represents an odd jumble of mismatched and poorly understood principles, the end result of which is to render this Court's decisions in *Univis Lens* and *Motion Picture Patents* dead letters—and to revive the legal regime this Court rejected in *A.B. Dick*.

B. The Federal Circuit's Exhaustion Jurisprudence Is Inconsistent With This Court's Precedents And Decisions Of The Other Courts of Appeals

The Federal Circuit's holding in this case is not a one-time error, but the culmination of a line of decisions that have steadily eroded the exhaustion doctrine and authorized patent owners to impose "notice" restrictions on sold goods.

The Federal Circuit's departure from the principles laid out in this Court's cases began in its 1992 *Mallinckrodt* decision. In *Mallinckrodt*, the patent owner sold a medical device called a "nebulizer" to hospitals, stamped with a "single use only" notice. The devices were in fact capable of multiple uses, and hospitals sent them to Medipart for reconditioning. The patent owner sued Medipart for infringement, and in a thoughtful opinion the district court examined this Court's precedents and correctly held that the "single use only" restriction was void on exhaustion grounds. *Mallinckrodt, Inc. v. Medipart, Inc.*, 15 U.S.P.Q.2d (BNA) 1113 (N.D. Ill. 1990), *rev'd in part, vacated in part, remanded by* 976 F.2d 700 (Fed. Cir. 1992). Mallinckrodt argued that under *General Talking Pictures* a patent owner may impose conditions on the sale of goods and enforce those conditions through infringement suits—and that contrary cases such as *Bauer*, *Motion Picture Patents*, and *Univis Lens* should be understood as antitrust decisions simply rejecting particular conditions as anticompetitive. *See id.* at 1118 ("Mallinckrodt urges that *Motion Picture Patents* is a tying case, plain and simple ...."). The district court rejected that interpretation, "not only because the[] language [of this Court's cases] suggests broader application, but because there is a strong public interest in not stretching the patent laws to authorize restrictions on the use of purchased goods." *Id.* at 1119. It concluded that regardless of "whether Mallinckrodt's 'Single Use Only' restriction might be enforceable on a legal theory other than patent infringement," such as breach of contract, it "is not enforceable under the patent laws." *Id.* at 1119-20.

The Federal Circuit reversed. It agreed with

Mallinckrodt that *Bauer*, *Motion Picture Patents* and *Univis Lens* established only "that price-fixing and tying restrictions accompanying the sale of patented goods were per se illegal. These cases did not hold, and it did not follow, that all restrictions accompanying the sale of patented goods were deemed illegal." *Mallinckrodt*, 976 F.2d at 704. The Federal Circuit stated that this Court's cases did not displace "the rule of contract law that sale may be conditioned," and that "[u]nless the condition violates some other law or policy (in the patent field, notably the misuse or antitrust law ...), private parties retain the freedom to contract concerning conditions of sale." *Id.* at 708. "The appropriate criterion is whether Mallinckrodt's restriction is reasonably within the patent grant, or whether the patentee has ventured beyond the patent grant and into behavior having an anticompetitive effect not justifiable under the rule of reason." *Id.*

As noted above, *supra* p. 9, commentators have been harshly critical of the *Mallinckrodt* decision. The Federal Circuit's reasoning in *Mallinckrodt* and subsequent cases (including this one) suffers from several serious flaws. First, it has essentially collapsed the patent exhaustion doctrine into the separate and distinct doctrine of *implied license*, which governs whether a sale of an article impliedly grants the purchaser a right to use that article in a manner that may infringe a patent. The implied license doctrine is somewhat broader and more factbound than exhaustion:

> Generally, when a seller sells a product without restriction, it in effect promises the purchaser that in exchange for the price paid, it will not interfere with the purchaser's full enjoyment of the product purchased. The buyer has an implied license under any patents of the seller that dominate the product or any uses of the product to which the parties might reasonably contemplate the product will be put.

Hewlett-Packard Co. v. Repeat-O-Type Stencil Mfg. Corp., 123 F.3d 1445, 1451 (Fed. Cir. 1997). Because implied license is an inference about the parties' contractual intent,

it may be disclaimed through contract language. But a purchaser's implied right to practice patents covering any "reasonably contemplate[d]" use is very different from the related exhaustion principle that "the authorized sale of an article which is capable of use only in practicing the patent is a relinquishment of the patent monopoly with respect to the article sold." *Univis Lens*, 316 U.S. at 249.

By permitting patent owners to "opt out" of exhaustion simply by expressing a desire that it not apply, the Federal Circuit has destroyed that distinction. Commentators have rightly warned that this shift "could signal the death of the exhaustion doctrine, at least in any case where the patentee is smart enough to unilaterally (or after the fact) characterize the sale as a limited license instead." Cohen & Lemley, 89 Cal. L. Rev. at 33-34; *see also* Stern, 15 Eur. Intell. Prop. Rev. at 461 (explaining that in *Mallinckrodt* a "century or more of exhaustion doctrine law was suddenly swept away, and the rule permitting limited-scope licenses swallowed up the exhaustion doctrine"). This is precisely the discredited reasoning of *A.B. Dick*, where a majority of this Court briefly embraced the notion that exhaustion was "nothing more nor less than an unrestricted license presumed from an unconditional sale." 224 U.S. at 24. This Court rejected that entirely contractual view of the exhaustion doctrine in *Motion Picture Patents*, and then again in *Univis Lens*. Again, it was perfectly clear from the conditional license agreements in *Univis Lens* that the patent owner in that case *did not* intend to grant its purchasers any right to use the lenses free of conditions. Nonetheless this Court held that the conditions imposed by the licenses were invalid because of the exhaustion doctrine.

Second, the Federal Circuit has essentially eliminated the traditional distinction between licenses and sales generally that this Court described as "well settled" as early as the *General Electric* case in 1926. 272 U.S. at 489-90. Properly understood, *General Talking Pictures* holds that breach of a condition in a manufacturing license permits an infringement suit against both licensee and purchaser,

because exhaustion is triggered only by an *authorized* sale. That rule is necessary to maintain symmetry with the fact that a patent owner who chooses to manufacture its own products can always decide which customers to sell to, and which not to sell to. But under *Motion Picture Patents* and *Univis Lens*, breach of a condition imposed on a *purchaser* has no effect at all—at least not under the patent laws.

"The distinction between sales and manufacturing licenses can be very fine .... Nonetheless US case law has always maintained the distinction as critical." Stern, 15 Eur. Intell. Prop. Rev. at 462. Court of appeals cases pre-dating the Federal Circuit's creation correctly applied that distinction. For example, in *Hensley Equipment Co. v. Esco Corp.*, 383 F.2d 252, 263, *amended*, 386 F.2d 442 (5th Cir. 1967), the Fifth Circuit held that the "[p]atent monopoly is 'exhausted' by the first authorized sale of the patented item, and the patent law does not protect attempts by the patentee or his licensees to control use of the product after such sale." Therefore a manufacturer cannot "restrict persons to whom an article may be traded after the manufacturer has parted with dominion over it." *Id.* By contrast, the courts of appeals followed *General Talking Pictures* to hold that restrictions on the right to sell imposed on manufacturing licensees were enforceable. *See, e.g., In re Yarn Processing Patent Validity Litig.*, 541 F.2d 1127, 1135 (5th Cir. 1976) ("[T]he restrictions on sale were within the scope of the patent grant because they were applied to a manufacturing licensee and not a purchaser of the patented articles ...."), *cert. denied*, 433 U.S. 910 (1977); *Automatic Radio Mfg. Co. v. Hazeltine Research, Inc.*, 176 F.2d 799, 803 (1st Cir. 1949) (enforcing restriction against licensee, and noting that "[t]here may be circumstances under which a notice of restricted use would be inoperative and unenforceable as against subsequent purchasers, but that problem is not presented in the case at bar"), *aff'd*, 339 U.S. 827 (1950), *overruled on other grounds by Lear, Inc. v. Adkins*, 395 U.S. 653 (1969); *Armstrong v. Motorola, Inc.*, 374 F.2d 764, 774 (7th Cir. 1967) (permitting restriction on

manufacturing licensee), *cert. denied*, 389 U.S. 830 (1967).

The Federal Circuit has nullified this long-standing distinction in patent law. *See, e.g.*, Kobak, 75 J. Pat. & Trademark Off. Soc'y at 554 (noting that *Mallinckrodt* "vitiates a distinction between sale and license which had grown to be well accepted"). It reads *General Talking Pictures* for the proposition that "conditions" imposed on *anyone* are enforceable through infringement suits, and distinguishes *Motion Picture Patents* and *Univis Lens* as antitrust cases holding only that particular conditions were anticompetitive. The Federal Circuit reached that result in *Mallinckrodt* by dismissing this Court's actual reasoning in those cases as "dicta." But "[w]hen the *Mallinckrodt* panel says that this is dictum, it is merely saying in a peculiar manner that it does not like the Supreme Court's reasoning and thinks that the Court should have held something else—that it should have reached its end result by a different conceptual route." Stern, 15 Eur. Intell. Prop. Rev. at 465. This Court explained clearly in *General Electric* that the exhaustion cases nullifying resale price restrictions, for example, *are not* antitrust decisions but instead "are only instances of the application of the principle of *Adams v. Burke* ... that a patentee may not attach to the article made by him, or with his consent, a condition running with the article in the hands of purchasers." 272 U.S. at 493-94; *see also* Kobak, 75 J. Pat. & Trademark Off. Soc'y at 555 (noting that the Federal Circuit "ignored completely the gloss given to the price restriction cases by the Supreme Court in *General Electric* and the clear distinction drawn by the Court between sales and licenses cases") (footnote omitted).

The distinction between sales and licenses has of course been blurred in recent decades by the ubiquity of "shrink wrap" or "click wrap" licenses imposing restrictions on the use of computer software. But such restrictions are permissible only because of the technical quirk that software purchasers also need a license to create new instances of the patented product whenever it is loaded into memory. The peculiarities of software should not be permitted to destroy

the license/sale distinction throughout the law.

Finally, the Federal Circuit's new jurisprudence of notice restrictions muddles together important distinctions between patent and contract law—leading Judge Gajarsa to warn of a "conceptual collapse." The license conditions in *General Talking Pictures*, and the sale conditions permitted by *A.B. Dick*, were enforced against purchasers under the property law principle that a purchaser cannot receive greater title than his seller intended to convey. Even after it rejected the enforcement of such conditions under patent/property law, this Court acknowledged that there was still a separate question about whether conditions might be enforced by state contract law. *See, e.g., Motion Picture Patents*, 243 U.S. at 509; *Keeler*, 157 U.S. at 666. The Federal Circuit has now attempted to revive the enforcement of such conditions by invoking contract principles—hence its contorted use of the U.C.C. here and in *Mallinckrodt*, and its occasional statement that exhaustion applies absent "a restriction having contractual significance," *Hewlett-Packard*, 123 F.3d at 1453, or an "express contractual undertaking by the purchaser," *Jazz Photo Corp. v. ITC*, 264 F.3d 1094, 1108 (Fed. Cir. 2001), *cert. denied*, 536 U.S. 950 (2002). But contractual enforcement must proceed under actual contract law—including contract damages and rescission principles, privity limitations, and a genuine analysis of the state law of offer and acceptance rather than the Federal Circuit's absurd pretense that any letter mailed to a consumer becomes an enforceable contract under the U.C.C. "battle of the forms." *See supra* pp. 6, 20 and note 2. No genuine contract analysis could bear the weight the Federal Circuit has tried to put on it: reviving the *A.B. Dick* rule that purchasers violating a use-restricting "notice" may be sued *for patent infringement.*

The Federal Circuit tries to justify its holdings by arguing that "[p]atent owners should not be in a worse position, by virtue of the patent right to exclude, than owners of other property used in trade," and invoking a

supposed "rule of contract law that sale may be conditioned." *Mallinckrodt*, 976 F.2d at 708. But ordinary contract law does not permit a manufacturer to stamp use-restricting "notices" on goods and enforce them against downstream purchasers. That would be a servitude or restraint on alienation running with chattels, and therefore necessarily a creature of *property* not contract law. Such restrictions have been disfavored by the law for centuries. In fact the Federal Circuit has given patent owners vastly greater rights to continue to restrict the subsequent use and disposition of sold goods than are enjoyed by sellers of ordinary goods, or even of other forms of intellectual property. *See, e.g.*, Kobak, 75 J. Pat. & Trademark Off. Soc'y at 562.

III. THIS CASE RAISES QUESTIONS OF NATIONAL IMPORTANCE

The Federal Circuit's decision in this case, and its broader patent exhaustion jurisprudence, raise issues of vital national importance that merit review by this Court.

On its own facts, this case involves an attempt by LGE to hold the entire international computer industry hostage for billions of dollars in royalties for incorporating Intel chips into their products—even though Intel has already paid LGE for an unrestricted license; even though Intel's products have no other reasonable use; and even though this Court has always held that "[p]atentees ... are entitled to but one royalty for a patented machine," and therefore "when a patentee has ... authorized another to construct and sell it ... and the consideration has been paid to him for the right, he has then to that extent parted with his monopoly, and ceased to have any interest whatever in the machine so sold ...." *Bloomer v. Millinger*, 68 U.S. 340, 350 (1864). Other patentees are waiting eagerly to see if this maneuver is permissible. LGE itself could replicate it by negotiating a license settlement with petitioners and other manufacturers that requires them to send a similar "notice" to consumers, and then demanding a *third* round of royalties. The core purpose of the exhaustion rule has always been to prevent

such vexatious demands. In circumstances like these, it reduces transaction costs by forcing one negotiation, up front, with the first purchaser. As this Court explained in *Keeler*, enforcing exhaustion "does not deprive a patentee of his just rights, because no article can be unfettered from the claim of his monopoly without paying its tribute. *The inconvenience and annoyance to the public that an opposite conclusion would occasion are too obvious to require illustration.*" 157 U.S. at 666-67 (emphasis added).

The Federal Circuit's remarkable new holding in this case that method claims can never be exhausted will also wreak havoc with commerce and the inventing community. Most patents include method claims; indeed, almost any device invention can also be described as a method of using that device, and most are. If method claims are now exempt from exhaustion, there will be an explosion of infringement suits seeking a second round of royalties from persons who (like petitioners) purchased goods and paid full price for them expecting that the patentee's claims were satisfied. Indeed, virtually all companies and consumers are likely infringing scores of patents under this reasoning.

More broadly, the Federal Circuit's decision threatens to usher in a new era of patent owners attaching "notices" to sold goods that purport to impose use restrictions that "run with" the sold articles. They will attempt to eliminate aftermarket competition by imposing "no resale" or resale price maintenance restrictions that follow the product throughout its lifetime. They will eliminate the purchaser's traditional right to repair the patented good (and nullify patent law's careful distinctions between permissible repair and impermissible reconstruction, *see, e.g.*, *Aro Mfg. Co. v. Convertible Top Replacement Co.*, 377 U.S. 476 (1964)) with "no repair" or "single use only" restrictions, as in *Mallinckrodt*. They will try "field of use" restrictions facilitating territorial division or price discrimination schemes, enforced by the full weight of patent law.

There will be years and perhaps decades of litigation over whether particular "notices" are enforceable. The

Federal Circuit has said that "[t]he appropriate criterion is whether [the] restriction is reasonably within the patent grant, or whether the patentee has ventured beyond the patent grant and into behavior having an anticompetitive effect not justifiable under the rule of reason." *Mallinckrodt*, 976 F.2d at 708. As applied by the Federal Circuit, that test is meaningless and circular. *No* restrictions on use or resale of the product after an authorized first sale are "within the patent grant" under well-settled traditional law. What the Federal Circuit likely means is that any condition that does not violate the antitrust laws will be permissible—but even that supplies no coherent limiting principle, because under antitrust law patentees are permitted to do things that others are not.

> If one takes the CAFC at its word and abolishes the distinction between a restriction in a license and a restriction in a sales transaction, and if one then applies to sales conditions the never overruled logic of *General Electric*, *General Talking Pictures* and other license restriction cases—that is, that any restriction likely to maximize the patentee's reward should be considered as inherent in the patent right—virtually *any* restriction, including in theory even a resale price restriction, would be immune from challenge under either antitrust or misuse principles.

Kobak, 75 J. Pat. & Trademark Off. Soc'y at 560-61 (footnotes omitted). At a minimum, there will be great confusion and litigation before these rules are settled.

Because Federal Circuit has cast the breach of any such notice or restrictive covenant as an issue of federal patent infringement, it will have exclusive jurisdiction over any appeals and therefore has guaranteed that its extraordinary and unprecedented jurisprudence will govern the enforcement of such conditions everywhere in the country. *See id.* at 560. Only this Court can straighten out this mess.

CONCLUSION

The petition for certiorari should be granted.

Respectfully submitted,

MAUREEN E. MAHONEY
Counsel of Record
J. SCOTT BALLENGER
ANNE W. ROBINSON
LATHAM & WATKINS LLP
555 11TH STREET N.W.
SUITE 1000
WASHINGTON, D.C. 20004
(202) 637-2200
Counsel for Petitioners

TERRENCE D. GARNETT
VINCENT K. YIP
PETER WIED
PAUL, HASTINGS, JANOFSKY
& WALKER LLP
515 SOUTH FLOWER STREET
25TH FLOOR
LOS ANGELES, CA 90071
(213) 683-6000
Counsel for Quanta Computer, Inc., Quanta Computer USA, Inc., Q-Lity Computer, Inc.

MAXWELL A. FOX
PAUL, HASTINGS, JANOFSKY
& WALKER LLP
34 F ARK MORI BUILDING
P.O. BOX 577
12-32 AKASAKA 1-CHOME
MINATO-KU, TOKYO 107-6034
JAPAN
813 6229 6100
Counsel for Quanta Computer, Inc., Quanta Computer USA, Inc., Q-Lity Computer, Inc.

RONALD S. LEMIEUX
PAUL, HASTINGS, JANOFSKY
& WALKER LLP
5 PALO ALTO SQUARE
6TH FLOOR
PALO ALTO, CA 94306
Counsel for First International Computer, Inc. and First International Computer of America, Inc.

WILLIAM J. ANTHONY, JR.
ERIC L. WESENBERG
KAI TSENG
MATTHEW J. HULT
ROWENA Y. YOUNG
ORRICK, HERRINGTON
& SUTCLIFFE LLP
1000 MARSH ROAD
MENLO PARK, CA 94025
(650) 614-7400
Counsel for Compal Electronics, Inc., Bizcom Electronics, Inc., Sceptre Technologies, Inc.

APPENDIX

UNITED STATES COURT OF APPEALS
FOR THE FEDERAL CIRCUIT

LG ELECTRONICS, INC., Plaintiff-Appellant,

v.

BIZCOM ELECTRONICS, INC., Compal Electronics, Inc., and Sceptre Technologies, Inc., Defendants-Cross Appellants,

and

Everex Systems, Inc., Defendant-Appellee,

and

First International Computer Inc. and First International Computer of America, Inc., Defendants-Cross Appellants,

and

Q-Lity Computer, Inc., Quanta Computer, Inc., and Quanta Computer USA, Inc., Defendants-Cross Appellants.

Nos. 05-1261, 05-1262, 05-1263, 05-1264, 05-1302, 05-1303, 05-1304.

July 7, 2006.
Rehearing and Rehearing En Banc Denied Sept. 1, 2006.

Before MICHEL, Chief Judge, NEWMAN, and MAYER, Circuit Judges.

MAYER, Circuit Judge.

LG Electronics, Inc. ("LGE") appeals from the final judgment of the United States District Court for the Northern District of California, which granted summary judgment of noninfringement of U.S. Patent Nos. 4,918,645; 5,077,733; 4,939,641; 5,379,379; and 5,892,509 in favor of Bizcom Electronics, Inc.; Compal Electronics, Inc.; Sceptre

Technologies, Inc.; First International Computer, Inc.; First International Computer of America, Inc.; Q-Lity Computer, Inc.; Quanta Computer, Inc.; Quanta Computer USA, Inc.; and Everex Systems, Inc. (collectively "defendants"). *LG Elecs., Inc. v. Ausustek Computer, Inc.*, Nos. C-01-1375, -1552, -1594, -2187 (N.D.Cal. Jan. 31, 2005); *LG Elecs., Inc. v. Ausustek Computer, Inc.*, Nos. C-01-1375, -1594, -2187, -1552 (N.D.Cal. Nov. 30, 2004); *LG Elecs., Inc. v. Asustek Computer, Inc.*, 248 F.Supp.2d 912 (N.D.Cal.2003); *LG Elecs., Inc. v. Ausustek Computer, Inc.*, Nos. C-01-326, -1375, -1594, -2187, -1552 (N.D.Cal. Aug. 20, 2002) ("*Intel I*"). LGE also appeals and defendants cross appeal various claim construction rulings by the trial court. *LG Elecs., Inc. v. Ausustek Computer, Inc.*, Nos. C-01-00326, -01375, -01594, -02187, -01552 (N.D.Cal. Aug. 20, 2002) ("*Claim Construction Order*"). Defendants First International Computer, Inc.; First International Computer of America, Inc.; Q-Lity Computer, Inc.; Quanta Computer, Inc.; and Quanta Computer USA, Inc. also cross appeal the denial of summary judgment based on their implied license defense. *LG Elecs., Inc.*, 248 F.Supp.2d 912.

Background

LGE is the owner of patents relating to personal computers, including U.S. Patents Nos. 4,918,645 (disclosing systems and methods that increase the bandwidth efficiency of a computer's system bus); 5,077,733 (claiming, in relevant part, a method that controls the access of a device to a bus shared by multiple devices); 4,939,641 (claiming, in relevant part, a system for ensuring that outdated data is not retrieved from memory); 5,379,379 (claiming a system and method for ensuring that outdated data is not retrieved from memory); and 5,892,509 (claiming networked computers capable of sharing certain video images). LGE sued defendants alleging infringement of these patents.

Defendants purchase microprocessors and chipsets from Intel or its authorized distributors and install them in computers. Intel is authorized to sell these products to

defendants under an agreement with LGE. However, pursuant to this agreement, Intel notified defendants that, although it was licensed to sell the products to them, they were not authorized under that agreement to combine the products with non-Intel products. LGE brought suit against defendants, asserting that the *combination* of microprocessors or chipsets with other computer components infringes LGE's patents covering those combinations. LGE did not assert patent rights in the microprocessors or chipsets themselves.

After construing the patent claims, the trial court granted summary judgment of noninfringement of each patent. It determined that there was no implied license to any defendant, but that, with the exception of the '509 patent, LGE's rights in any system claims were exhausted. The court also found that LGE was contractually barred from asserting infringement of the '509 patent against defendants. It found the '645, '733, and '379 patents not infringed after applying its claim construction to the accused methods and devices. We have jurisdiction under 28 U.S.C. § 1295(a)(1).

Discussion

"We review the trial court's grant of summary judgment without deference, reapplying the same standard as the trial court." *Lacavera v. Dudas*, 441 F.3d 1380 (Fed.Cir.2006) (citing *Star Fruits S.N.C. v. United States*, 393 F.3d 1277, 1281 (Fed.Cir.2005)). Summary judgment is appropriate "if the pleadings, depositions, answers to interrogatories, and admissions on file, together with the affidavits, if any, show that there is no genuine issue as to any material fact and that the moving party is entitled to a judgment as a matter of law." Fed.R.Civ.P. 56(c). We review claim construction *de novo*. *Cybor Corp. v. FAS Techs., Inc.*, 138 F.3d 1448, 1456 (Fed.Cir.1998) (en banc).

I. Implied License[1]

"In a suit for patent infringement, the burden of proving the establishment of an implied license falls upon the defendant." *Bandag, Inc. v. Al Bolser's Tire Stores, Inc.*, 750 F.2d 903, 924 (Fed.Cir.1984) (citing *Bassick Mfg. Co. v. Adams Grease Gun Corp.*, 54 F.2d 285, 286 (2d Cir.1931)). To prevail, defendants were required to establish that the products have no noninfringing uses and that "the circumstances of the sale ... 'plainly indicate that the grant of a license should be inferred.' " *Met-Coil Sys. Corp. v. Korners Unlimited, Inc.*, 803 F.2d 684, 686 (Fed.Cir.1986) (quoting *Bandag, Inc.*, 750 F.2d at 925). The trial court found, and we agree, that Intel's sales of its licensed products to defendants do not warrant the inference of a license with respect to the asserted patents. Regardless of any noninfringing uses, Intel expressly informed them that Intel's license agreement with LGE did not extend to any of defendants' products made by combining an Intel product with non-Intel products. In light of this express disclaimer, no license can be implied.

II. Patent Exhaustion

The patents asserted by LGE do not cover the products licensed to or sold by Intel; they cover those products when combined with additional components. The trial court, nevertheless, found that the system claims in all patents except the '509 patent were exhausted, but that the exhaustion doctrine did not apply to the method claims. We reverse the trial court's holding with respect to the system claims and affirm with respect to the method claims.

It is axiomatic that the patent exhaustion doctrine, commonly referred to as the first sale doctrine, is triggered

---

[1] First International Computer, Inc.; First International Computer of America, Inc.; Q-Lity Computer, Inc.; Quanta Computer, Inc.; and Quanta Computer USA, Inc. are the defendants challenging the trial court's implied license ruling.

by an unconditional sale. *See Mitchell v. Hawley*, 16 Wall. 544, 83 U.S. 544, 547, 21 L.Ed. 322 (1873). "[A]n *unconditional* sale of a patented device exhausts the patentee's right to control the purchaser's use of the device thereafter. The theory behind this rule is that in such a transaction, the patentee has bargained for, and received, an amount equal to the full value of the goods. This exhaustion doctrine, however, does not apply to an expressly conditional sale or license. In such a transaction, it is more reasonable to infer that the parties negotiated a price that reflects only the value of the 'use' rights conferred by the patentee." *B. Braun Med. Inc. v. Abbott Labs.*, 124 F.3d 1419, 1426 (Fed.Cir.1997) (discussing *Mallinckrodt, Inc. v. Medipart, Inc.*, 976 F.2d 700, 708 (Fed.Cir.1992)) (emphasis added and citations omitted).

There are two sales at issue here. First, prior to this litigation, LGE granted Intel a license covering its entire portfolio of patents on computer systems and components. This transaction constitutes a sale for exhaustion purposes. *See United States v. Masonite Corp.*, 316 U.S. 265, 278, 62 S.Ct. 1070, 86 L.Ed. 1461 (1942). Second, with LGE's authorization, Intel sold its microprocessors and chipsets to each defendant. Notably, this sale involved a component of the asserted patented invention, not the entire patented system.

The trial court issued two orders on patent exhaustion. The first is unclear about which sale the court relied upon in holding LGE's system patent rights exhausted with respect to defendants, but we understand it to be LGE's license to Intel. *Intel I* at 9-10. However, the second order, which reaffirmed the first, clearly relied on Intel's sale of its microprocessors and chipsets to defendants as the exhausting sale. *LG Elecs., Inc.*, 248 F.Supp.2d at 917. In finding the unconditional sale requirement satisfied, the court concluded that although "LGE is entitled to impose conditions on the sale of the essential components of its patented products does not mean that it actually did so here.

To the contrary, defendants' purchase of the microprocessors and chipsets from Intel was unconditional, in that defendants' purchase of the microprocessors and chipsets from Intel was in no way conditioned on their agreement not to combine the Intel microprocessors and chipsets with other non-Intel parts and then sell the resultant products." *Id.* at 916-17. We disagree.

The LGE-Intel license expressly disclaims granting a license allowing computer system manufacturers to combine Intel's licensed parts with other non-Intel components. Moreover, this conditional agreement required Intel to notify its customers of the limited scope of the license, which it did. Although Intel was free to sell its microprocessors and chipsets, those sales were conditional, and Intel's customers were expressly prohibited from infringing LGE's combination patents. *Cf.* N.Y. U.C.C. Law § 2-202 (allowing contracts to be supplemented by consistent additional terms unless the writing is intended to be complete and exclusive). The "exhaustion doctrine ... does not apply to an expressly conditional sale or license," *B. Braun Med. Inc.*, 124 F.3d at 1426, so LGE's rights in asserting infringement of its system claims were not exhausted.

Conversely, the trial court declined to find LGE's asserted method claims exhausted. Several defendants contest this ruling on cross-appeal, and we reject their challenge. Based on the above reasoning, even if the exhaustion doctrine were applicable to method claims, it would not apply here because there was no unconditional sale. However, the sale of a device does not exhaust a patentee's rights in its method claims. *Glass Equip. Dev., Inc. v. Besten, Inc.*, 174 F.3d 1337, 1341 n. 1 (Fed.Cir.1999) (citing *Bandag, Inc. v. Al Bolser's Tire Stores, Inc.*, 750 F.2d 903, 924 (Fed.Cir. 1984)). The court was correct.

III. '509 Patent

The '509 patent discloses a system of networked computers capable of sharing video images. The trial court's exhaustion ruling did not extend to the '509 patent; instead

it granted summary judgment of noninfringement on the ground that LGE was contractually barred from asserting infringement of the '509 patent claims against defendants. This conclusion was based on a non-assertion provision in a contract between LGE and Microsoft, which barred LGE from suing "[Microsoft], its suppliers, their subsidiaries, or their licensees."[2] The court concluded that defendants were included within this class of parties. Because a genuine issue of material fact exists as to whether defendants fall within the protection of this contract provision, we reverse the trial court's grant of summary judgment of noninfringement.

In determining whether LGE is barred under the LGE-Microsoft agreement from suing defendants for infringement, the dispositive issue is whether each defendant is a Microsoft licensee. Defendants are third-party installers ("TPIs") that assemble computers for original equipment manufacturers ("OEMs"). The OEMs have licenses with Microsoft, and it is undisputed that defendants were authorized to install Microsoft's products on the systems they manufacture. It is unclear, however, whether defendants' authorization was under "have made" rights of the OEMs' agreements with Microsoft, whereby the OEM would be authorized to use a third party for completing work on its behalf, or whether such authorization was as a sublicensee. If the work was authorized solely by an OEM's have made rights, and if that OEM were not authorized to grant sublicenses under its

---

[2] The relevant contract provision provides:

> [As partial consideration for the rights granted to [LGE] under the License Agreement(s), [LGE] agrees not to (A) sue, or (B) bring, prosecute, assist or participate in any judicial, administrative or other proceedings of any kind against [Microsoft], its Suppliers, their subsidiaries, or their licensees (including without limitation [original equipment manufacturer] customers and end users) for infringement of [LGE's] Patents ... which occurs during the Immunity period ... on account of the manufacture, use, sale, or distribution of ... [the product's licensed to LGE by Microsoft].]

agreement with Microsoft, then defendants may not be "licensees" protected by the LGE-Microsoft non-assertion provision. *Cf. Cyrix Corp. v. Intel Corp.*, 77 F.3d 1381, 1388 (Fed.Cir.1996) (distinguishing "have made rights" from sublicenses). A genuine issue of material fact exists as to each defendant's status.

On remand, defendants must establish that LGE is contractually barred from pursuing infringement claims against them. *See McCoy v. Mitsuboshi Cutlery, Inc.*, 67 F.3d 917, 920 (Fed.Cir.1995). Although the parties have relied on the LGE-Microsoft agreement in arguing whether or not defendants are Microsoft licensees, that agreement is not the proper focus. It is the agreements between each OEM and each defendant, and those between Microsoft and the OEM hiring each defendant that matter.

The record indicates that FIC was both a TPI and an OEM. As an OEM, it had a license from Microsoft, and therefore falls squarely within the scope of protected parties under the non-assertion provision. However, the contract provision only bars suit against Microsoft licensees for infringement "on account of" the manufacture, use, sale, or distribution of Microsoft's products. LGE does not dispute that there is no infringement absent the Microsoft software in the accused devices, since the software satisfies some, but not all, limitations of the '509 patent claims. However, LGE argues that any infringement was not "on account of" the use of Microsoft products. The trial court rejected this argument, essentially reading the "on account of language" as a "but for" requirement.

The "on account of" language, however, is not susceptible of only one interpretation. According to the Supreme Court in construing this phrase in an unrelated statute, "the phrase 'on account of' does not unambiguously define itself." *O'Gilvie v. United States*, 519 U.S. 79, 82, 117 S.Ct. 452, 136 L.Ed.2d 454 (1996) (construing 26 U.S.C. § 7405(b)). Here, too, the degree of causation required by this contract term is unclear. Because proper construction

requires factual considerations, we reverse the trial court's grant of summary judgment. *Scott Galvanizing, Inc. v. Nw. EnviroServices, Inc.*, 120 Wash.2d 573, 844 P.2d 428, 433 (1993); *see also BNC Mortgage, Inc. v. Tax Pros, Inc.*, 111 Wash.App. 238, 46 P.3d 812, 819-820 (2002) ("If the contract's written words have two or more reasonable meanings (i.e., are 'ambiguous') when read in context, a court may not grant summary judgment or direct a verdict; instead, it must put the case to a trier of fact.") (citations omitted).

The parties also dispute the trial court's construction of several claim terms in the '509 patent. Claim 35, from which asserted claims 45 and 51 depend, contains the limitation of "a control unit for controlling the communication unit, wherein the control unit comprises a [central processing unit ('CPU')] and a partitioned memory system." LGE contends that the trial court erroneously construed the term "control unit" as a means-plus-function limitation.

" '[A] claim term that does not use 'means' will trigger the rebuttable presumption that § 112 ¶6 does not apply.' " *Lighting World, Inc. v. Birchwood Lighting, Inc.*, 382 F.3d 1354, 1358 (Fed.Cir.2004) (quoting *CCS Fitness, Inc. v. Brunswick Corp.*, 288 F.3d 1359, 1369 (Fed.Cir.2002)). This presumption can be rebutted "by showing that the claim element recite[s] a function without reciting sufficient structure for performing that function." *Watts v. XL Sys.*, 232 F.3d 877, 880 (Fed.Cir.2000) (citing *Rodine PLC v. Seagate Tech., Inc.*, 174 F.3d 1294, 1302 (Fed.Cir.1999)). However, the presumption "is a strong one that is not readily overcome." *Lighting World, Inc.*, 382 F.3d at 1358.

Here, the claim limitation at issue does not use the term "means," and the presumption against means-plus-function treatment is not overcome. The claim itself provides sufficient structure, namely "a CPU and a partitioned memory system," for performing the stated function, "controlling the communication unit." *See id.* at 1359-60. Thus, the proper construction of "control unit" is "a

combination comprising a CPU and a partitioned memory system capable of controlling the communication unit."

Defendants contend on cross appeal that the trial court also misconstrued claim 35 by not requiring multiple displays. In particular, they contend that the preamble term "image processing system" requires multiple displays in light of the prosecution history. However, the claim language does not include this limitation, and the trial court properly refused to read it into the claim. Moreover, the body of the claim provides for "a display." *KCJ Corp. v. Kinetic Concepts, Inc.*, 223 F.3d 1351, 1356 (Fed.Cir.2000) ("This court has repeatedly emphasized that an indefinite article 'a' or 'an' in patent parlance carries the meaning of 'one or more' in open-ended claims containing the transitional phrase 'comprising.' ") (citations omitted). Claim differentiation also supports the trial court's construction because dependent claim 38 adds the limitation of the "image processing system further compris[ing] at least first and second displays coupled to the CPU of the image processing system." *See Phillips v. AWH Corp.*, 415 F.3d 1303, 1314 (Fed.Cir.2005) ("Differences among claims can also be a useful guide in understanding the meaning of particular claim terms." (citing *Laitram Corp. v. Rexnord, Inc.*, 939 F.2d 1533, 1538 (Fed.Cir.1991))).

The prosecution history relied upon by defendants does not compel a different construction. The patentee made arguments during prosecution to distinguish claims in the parent application to the '509 patent, which expressly required multiple displays, over the prior art. These arguments, however, do not compel reading a multiple display limitation into the '509 patent, which does not expressly require multiple displays. *See Elkay Mfg. Co. v. Ebco Mfg. Co.*, 192 F.3d 973, 980 (Fed.Cir.1999) ("When multiple patents derive from the same initial application, the prosecution history regarding a claim limitation in any patent that has issued applies with equal force to

subsequently issued patents *that contain the same claim limitation.*" (emphasis added)).

IV. '645 patent

The '645 patent discloses a digital computer system that has devices called agents that are interconnected by a system bus. The claimed system and corresponding method require one agent, the requesting agent, to request access to a memory stored on another agent, called the replying agent. The requested data is organized as a matrix of memory cells, having column and row coordinates. The "memory controller" of the replying agent processes the request from the requesting agent by asserting a plurality of memory address control signals, including at least one row address strobe ("RAS") signal and one column address strobe ("CAS") signal. This "page mode memory access" operates by the assertion of an entire row of data followed by the assertion and deassertion of multiple column addresses. By the RAS signal accessing an entire row followed by the assertion and deassertion of particular column addresses, this page mode memory access differs from the conventional memory access, which separately accessed each memory cell by asserting its individual row address and column address. In the claimed invention, after the data is accessed, it is then transferred to the requesting agent over the system bus.

LGE alleged infringement of system claims 1-4 and 6 and method claims 12-15 and 17. The trial court granted summary judgment of noninfringement of all asserted claims, concluding that the RAS/CAS signals in defendants' devices did not travel over the system bus. However, the '645 patent claims do not contain a limitation requiring that the strobe signals travel over the system bus. Moreover, the specification does not suggest that the strobe signals must travel over the system bus. To the contrary, Figure 5 shows an embodiment of the invention in which the strobe signals travel only internally within the replying agent, not across the system bus.

In an attempt to impose this limitation on the claims, defendants rely on the prosecution history. While the prosecution history is relevant to claim construction, "it often lacks the clarity of the specification and thus is less useful for claim construction purposes." *Phillips*, 415 F.3d at 1317 (citations omitted). Here, defendants point to statements in the prosecution history that the prior art does not teach "a page mode type of access over a system bus from a requesting agent to a replying agent." While we agree that this and other statements in the prosecution history lack ideal clarity, we do not find that they rise to the level of disclaiming or limiting the scope of the express claim language. Therefore, the trial court erred in construing the '645 claims to require the RAS and CAS signals to travel over the system bus. In addition, there is a genuine issue of material fact as to whether the accused devices and methods utilize strobe signals. LGE's expert submitted an affidavit that the accused devices employ strobe signals, which precludes summary judgment.

In the alternative, defendants contend that LGE failed to present evidence of an "end of access signal." This signal, which is required by the claims, is generated by the requesting agent and received by a detecting means coupled to the memory address control signal asserting means. When the detection means receives this end of access signal, the operation is halted. Defendants contend that LGE failed to establish the existence of a genuine issue of material fact as to whether the accused devices contain this limitation. However, the trial court did not consider this argument, and we will not address this factual issue in the first instance.

LGE also argues that the trial court's construction of the "requesting agent" claim limitation was in error. The court construed this term as "a device coupled to the system bus that requests access to a memory located on a replying agent." *Claim Construction Order* at 6-9. LGE contends that an industry standard, which was incorporated into the specification by reference, provides the proper claim

construction of this term. '645 patent col. 3 ll. 51-56.[3] The incorporated standard explicitly defines the term "requesting agent" as "an agent that has entered into the arbitration function for bus access." Defendants contend, however, that the patentee did not act as its own lexicographer by incorporating this industry standard by reference. The trial court did not accept LGE's proposed construction, concluding that it was a preferred embodiment and did not limit the claimed invention. The difference in the two constructions is temporal: LGE's proposed construction defines an agent as a requesting agent only when it is engaged in arbitration for bus access, whereas the trial court's construction defines a requesting agent regardless of whether it is actively engaged in arbitration.

We have recognized that the "[i]nterpretation of descriptive statements in a patent's written description is a difficult task, as an inherent tension exists as to whether a statement is a clear lexicographic definition or a description of a preferred embodiment." *E-Pass Techs., Inc. v. 3Com Corp.*, 343 F.3d 1364, 1369 (Fed.Cir.2003). "Thus in determining whether a statement by a patentee was intended to be lexicographic, it is important to determine whether the statement was designed to define the claim term or to describe a preferred embodiment." *Id.* We agree with the trial court and defendants that the patentee did not act as its own lexicographer here. Instead, the industry

---

[3] The specification provides:

> Although the method and apparatus of the invention will be described herein in the context of a Multibus II environment, it should be appreciated that the invention may be practiced in many digital computer systems having a bus for transferring data between at least two agents interconnected upon the bus.
>
> The operating characteristics of the Multibus II are described in a document entitled "High Performance 32-Bit Bus Standard P1296" which was produced by the IEEE microprocessor standards committee P1296 working group, Jun. 20, 1986, draft 2.0, the disclosure of which is incorporated herein in its entirety.

'645 patent col. 3 ll. 45-56.

standard was incorporated as a preferred embodiment. The specification makes this clear by explaining that "[a]lthough the method and apparatus of the invention will be described herein in the context of a Multibus II environment, it should be appreciated that the invention may be practiced in many digital computer systems having a bus for transferring data between at least two agents interconnected upon the bus." '645 patent col. 3 ll. 45-49.

Chimie v. PPG Industries, Inc., 402 F.3d 1371 (Fed.Cir.2005), does not compel a different result. In *Chimie*, we were confronted with the claim terms "dust-free and non-dusting." After concluding that these terms were relative and could only be understood by comparison with the prior art, we concluded that only one standard was disclosed in the specification for making such a comparison. We limited these claim terms to the disclosed standard. Here, however, there is no relative term that cannot be understood without reference to an industry standard.

But, this does not end our inquiry. The proper claim construction is "the ordinary and customary meaning ... that the term would have to a person of ordinary skill in the art in question at the time of the invention, i.e., as of the effective filing date of the patent application." *Phillips*, 415 F.3d at 1313 (citations omitted). "When prior art that sheds light on the meaning of a term is cited by the patentee, it can have particular value as a guide to the proper construction of the term, because it may indicate not only the meaning of the term to persons skilled in the art, but also that the patentee intended to adopt that meaning." *Arthur A. Collins, Inc. v. N. Telecom Ltd.*, 216 F.3d 1042, 1045 (Fed.Cir.2000). Although we have concluded that the patentee did not expressly adopt the definition of "requesting agent" in the incorporated industry standard, that standard remains relevant in determining the meaning of the claim term to one of ordinary skill in the art at the time the patent application was filed, and it is treated as intrinsic evidence for claim construction purposes, *see V-*

Formation, Inc. v. Benetton Group SpA, 401 F.3d 1307, 1311 (Fed.Cir.2005) ("This court has established that 'prior art cited in a patent or cited in the prosecution history of the patent constitutes intrinsic evidence.' ") (citations omitted).

Here, the trial court erred by failing to give proper weight to the incorporated industry standard; it failed to consider the standard as intrinsic evidence of the meaning to one of ordinary skill in the art as of the filing date. After considering the standard, in addition to the patent claims and specification, we conclude that LGE's proffered definition based on the standard is correct. Thus, we construe "requesting agent" as "an agent that has entered into the arbitration function for bus access." This construction is entirely consistent with the specification, which provides that "at one time in the operation of the system ... the requesting agent 12 may be a replying agent, and that the replying agent 16 may at that time be a requesting agent." '645 patent col.4 ll. 8-11. This language makes clear that the classification of an agent depends upon the function the agent is performing at any given time, i.e., whether it is engaged in arbitration at a given moment.

V. '733 patent

The '733 patent discloses a rotating priority system that provides multiple computer devices alternating access to a system bus, which is the pathway over which the various components of a computer system transmit data. This system addresses the problem of "hogging," in which one component of a computer system monopolizes access to the system bus. The asserted claims of the '733 patent, method claims 15-19,[4] establish a rotating priority system that limits

---

[4] Claim 15, the only independent claim at issue, provides:

A method for determining priority of access to a bus among a set of devices coupled to the bus, each device being represented for priority purposes by a node in a group of nodes and each node having a priority relative to a single node currently having the highest priority, the method comprising the steps of:

each device's access to the bus. In particular, claim 15 sets forth two steps of the method as "counting a number of accesses by the device to the bus" and then "in response to a predetermined number of accesses to the bus, giving another [device] the highest priority." The trial court granted summary judgment of noninfringement of the '733 patent, holding that the claim limitation of "counting a number of accesses by the device to the bus" was not practiced in the accused method.

The court construed the claim limitation "counting a number of accesses" as "counting the number of times a device gains use of the bus." *Claim Construction Order* at 38-41. The parties do not directly challenge this construction, but LGE argues that a genuine issue of material fact exists as to whether the accused method performed this step. LGE argues that the master latency timer ("MLT") in defendants' accused devices performs this step. MLTs count clock signals when an anchor node has possession of the bus. Defendants contend that although an MLT limits the time duration of bus access by a device, it does not count the number of accesses by the device. Defendants also contend that, in some instances, the MLTs continue counting when clock signals pass even if no access to the bus is taking place, such as during WAIT periods when no data is being placed on the bus.

LGE responds that the bus is accessed even during WAIT periods, regardless of whether any data is placed on the bus, because the device has access to the bus. LGE

---

receiving an access request in a node from a represented device;

determining whether any node with a higher priority has received an access request;

if no such node has received an access request, permitting the device to access the bus;

counting a number of accesses by the device to the bus; and

in response to predetermined number of accesses to the bus, giving another node the highest priority.

points out that the purpose of the invention is to eliminate "hogging" the bus, and that the bus is "being hogged" even during WAIT periods. Further, LGE argues that, under the trial court's construction, a device still has "use of the bus" during a wait period. LGE points to the discussion in the '733 patent relating to Figure 8. '733 patent col. 21. In this preferred embodiment, the description includes a programmable node grant counter NGCNT 720. The description explains that when certain conditions are met, an enable count input is asserted and during a bus access cycle a transition of a clock signal causes NGCNT 720(1) to increment by one count. Therefore, when certain criteria are met, a clock signal can create an access count.

There is a genuine issue of material fact as to whether the accused devices count the number of accesses. *See Ranbaxy Pharms., Inc. v. Apotex, Inc.*, 350 F.3d 1235, 1240 (Fed.Cir.2003) ("Infringement, both literal and under the doctrine of equivalents, is a question of fact." (citing *Insituform Techs., Inc. v. Cat Contracting, Inc.*, 161 F.3d 688, 692 (Fed.Cir.1998))). The central issue is whether the bus is accessed on each clock signal so that the clock signals, in effect, count the number of accesses to the bus. The trial court agreed that LGE's argument is consistent with its claim construction, but found that it failed to present evidence supporting its position. To the contrary LGE presented sufficient expert testimony on this issue to avoid summary judgment. LGE's expert testified that some type of signal is asserted with each clock signal, and, if proven, this would in effect make the MLTs count accesses. The summary judgment is vacated.

VI. '641 patent

The '641 patent discusses a system for ensuring that the most current data is retrieved from the main memory. Because individual devices can update data in their own local cache memory without immediately writing the new data back to the main memory, data in the main memory can be "stale." Therefore, the system claimed in the '641 patent

monitors the data being transferred over the bus, and if data stored in the cache matches the address of the data being transferred, a hold signal is asserted. Then, the data being transferred is compared with the data on the cache. If there is a difference, the data stored on the cache, which is the most recent data, is also transferred.

The trial court concluded the '641 patent claims asserted were not infringed based on its patent exhaustion holding, which we reverse above. However, LGE contends that the trial court also improperly construed claims 1, 5, and 14. In particular, LGE disputes the trial court's construction of "cache memory means" (in claims 1 and 5) and "cache memory" (in claim 14), which were construed as "one of at least two high speed memories located close to the CPU of a computer to give the CPU faster access to blocks of data than could be taken directly from the larger, slower main memory and never using valid/invalid bits." *Claim Construction Order* at 18-22. LGE contends that the trial court improperly read claims 1 and 14 as requiring at least two caches. It also contends that the trial court improperly read in the limitation that neither cache uses valid/invalid bits.

We agree with LGE that the trial court erred in reading the limitation of at least two high speed memories into claims 1 and 14. Unlike claim 5, which expressly requires at least two cache memory means, claims 1 and 14 have no such express limitation. *Cf. Phillips*, 415 F.3d at 1314 ("Differences among claims can also be a useful guide in understanding the meaning of particular claim terms." (citing *Laitram Corp. v. Rexnord, Inc.*, 939 F.2d 1533, 1538 (Fed.Cir.1991))). To the contrary, claims 1 and 14 only require one or more CPUs and a cache memory coupled between the CPU and the bus. Because the claims expressly cover one central processing unit, they logically also cover systems with only one cache coupled between that single central processing unit and the bus. Defendants rely on the fact that the written description describes a

system with multiple caches. However, as we explain in more detail below, the patent application initially described two inventions, and these statements relate to the other invention that is not claimed in the '641 patent.

We also agree with LGE that the trial court improperly read the limitation of never using valid/invalid bits into the claims. The patent's background section suggests that valid/invalid bits were used to manage data in systems with more than one cache. In particular, it explains that the purpose of the invalid bit is to redirect a processor attempting to access an address in its cache to another cache with a more updated memory associated with that address. '641 patent col. 1 ll. 44-52. The claims at issue do not themselves expressly include or exclude the use of valid/invalid bits. Defendants, however, contend that the trial court's construction is supported by the specification and prosecution history. The specification states that "a further object of this invention [is] to provide a cache memory system wherein the use of valid/invalid data indicators are avoided." '641 patent col. 1 ll. 65-67. It further states that "[i]t should be kept in mind during the following description, that the invention maintains data integrity by assuring that cache data is always the most up-to-date in the system. Thus, there never is a 'valid' or 'invalid' indication with respect to any cache data as it is always assured that if data is provided by a cache, that it invariably is valid (i.e. most up-to-date)." *Id.* col. 3 ll. 27-33.

Defendants are correct that reviewing the specification in construing claims is appropriate, *Phillips*, 415 F.3d at 1315-17, but such review need not be done in the abstract. Here, as noted above, the original patent application disclosed two inventions. As the examiner observed, one invention was "drawn to a cache system for updating each copy of the data stored in a plurality of caches when the data is modified," and the other was drawn to "a cache system for sending the most current data to a requestor by monitoring the address of a data on a data bus for detecting whether

the [data] is stored and modified in the cache." The patent examiner concluded that these two inventions were distinct and required the applicant to elect one invention. The applicant ultimately limited the original application to the latter group of claims, which issued as the '641 patent, and the other claim group was separated into a different application, which ultimately issued as U.S. Patent No. 5,097,409.

Here, the discussion of valid/invalid bits in the specification was relevant to multi-cache systems, because the patent's background provides that "[s]o long as a write back cache is utilized with only one processor, data management is straight forward. However, when more than one central processor uses the same main memory, data management problems multiply." '641 patent col. 1 ll. 39-43. The patent explains that the data management problems in multiple CPU systems are a result, at least in part, of their containing more than one cache memory. Managing data in multiple cache systems was the subject of the invention not elected during prosecution and, therefore, the statements in the specification referring to valid/invalid bits are not relevant to the invention ultimately claimed in the '641 patent. *Cf. Pitney Bowes, Inc. v. Hewlett-Packard Co.*, 182 F.3d 1298, 1311 (Fed.Cir.1999) (observing that a written description describing multiple inventions may not be relevant "in toto" to each of those inventions). Indeed, the unelected claims expressly contained the limitation that the "cache memory means hav[e] no provisions for indicating the invalidity of said data units," whereas the elected claims contained no such limitation.

For the same reasons, we do not find that the patentee disavowed the use of valid/invalid bits under the doctrine of specification disclaimer. "[T]he specification may reveal an intentional disclaimer, or disavowal, of claim scope by an inventor. In that instance, ... the inventor has dictated the correct claim scope, and the inventor's intention, as expressed in the specification, is regarded as dispositive."

Phillips, at 1316; *see also SciMed Life Sys. v. Advanced Cardiovascular Sys.*, 242 F.3d 1337, 1341 (Fed.Cir.2001). However, because the statements relied upon by defendants relate to the invention not elected during prosecution, there is no clear disavowal with respect to the invention actually claimed in the '641 patent.

VII. '379 patent

Like the '641 patent, the '379 patent claims a system and method for ensuring that the most current data, as opposed to "stale" data, is retrieved from memory. The claimed invention relates to how a memory controller coordinates requests to read data from the memory and requests to write data to the memory. Generally, when a read request is asserted that corresponds to a buffered write request, the write request must go first to ensure that what is read from memory is the most current data. The invention disclosed in the '379 patent does this by comparing the address of each read request to the buffered write requests, noting any matches, halting read execution when there is a match, and executing the buffered write requests.

LGE contends that the trial court erred in construing system claims 1 and 23 as requiring all write requests to be executed after a match is detected, as opposed to executing any number of write requests until the write request corresponding to the matching read request is executed. We agree. The claim language does not require all write requests to be executed after a match is detected. Moreover, claim 2, which depends from claim 1, expressly requires the execution of all write requests, as does independent method claim 7. *See Phillips*, 415 F.3d at 1314 (recognizing the utility of claim differentiation). In addition, the claim limitation at issue is written in means-plus function-claim language ("means for ... causing an execution of buffered write requests"). Because the recited function is clear on its face, it was improper to incorporate the additional functional limitation of executing "all" buffered write requests. *Smiths Indus. Med. Sys., Inc. v. Vital*

Signs, Inc., 183 F.3d 1347, 1357 (Fed.Cir.1999); *see also Wenger Mfg., Inc. v. Coating Mach. Sys., Inc.*, 239 F.3d 1225, 1233 (Fed.Cir.2001) ("[A] court may not import functional limitations that are not recited in the claim ....").

LGE also disputes the trial court's grant of summary judgment of noninfringment of method claim 7.[5] This claim explicitly requires the step of buffering "each" read request and then comparing that read request to the buffered write

---

[5] Claim 7 provides:

In an information processing system having a system bus for coupling together a plurality of bus connections, one of the bus connections being a memory control unit coupled to one or more memory units, the memory control unit being responsive to address and data signal lines of the system bus for writing information units to and for reading information units from the memory units, a method of reading and writing the information units comprising the steps of:

buffering write requests, including write addresses, as they are received from the system bus;

buffering read requests, including read addresses, as they are received from the system bus; comparing when received each read address against buffered write addresses, if any, to determine if a received read address has an address value within a predetermined range of address values of a buffered write address;

if a received address is determined not to be within the predetermined range of addresses of any buffered write addresses then:

first executing in sequence all buffered read requests; and then executing in sequence all buffered write requests;

else if a received address is determined to have an address value within the predetermined range of address values of any buffered write address;

first executing in sequence all buffered read requests up to but not including the received read request which was determined to be within the predetermined range;

then executing all buffered write requests; and then executing the buffered read request which

was determined to be within the predetermined range.

addresses. If the read request matches a write request, then the claim provides for the following steps: executing all buffered read requests up to the matching request; then executing "all buffered write requests;" and then executing the matching read request. If, however, the comparison of the read request does not yield a match to a buffered write request, then all read requests are executed. Defendants contend, and LGE does not appear to dispute, that the accused devices do not operate in this manner. Instead, they contend that when a buffered read request matches a buffered write request, their devices do not execute "all" write requests before executing the matching read request, but instead only execute the write requests up to the one matching the read request, and then execute the matching read request.

The trial court concluded, and we agree, that there was no literal infringement of this claim. The claimed method requires handling each read address in one of two ways depending on whether the read request matches a write request. The second way, which applies when the pending read request matches a pending write request, is to execute all write requests before executing the read request. LGE contends that when the matching write request happens to be the last in the buffer, all write requests are in fact executed before the matching read request. Although LGE correctly asserts that any practice of the claimed method would be infringement, *Bell Commc'ns Research, Inc. v. Vitalink Commc'ns Corp.*, 55 F.3d 615, 622 (Fed.Cir.1995), the claim must be considered in its entirety. Here, the claim requires *each* read request to be compared with the buffered write requests, and then one of two alternatives be followed. Because the claim was drafted with this limitation, the fact that the accused device occasionally operates in such a manner does not amount to literal infringement of claim 7. For infringement to be found, the claim requires the accused device to operate in this manner in response to "each" read request.

The trial court also found, as a matter of law, that there was no infringement under the doctrine of equivalents. In doing so, it rejected LGE's argument that performing all of the write requests up to (and including) the one matching the read request is an insubstantial difference from the claim limitation of performing all write requests before executing the incoming read request. The trial court reasoned that LGE's equivalence theory would vitiate the claim limitation of performing "all" write requests before an incoming read request matching a write request.

The doctrine of equivalents operates under the "all limitations rule," whereby "equivalence [is] assessed on a limitation-by-limitation basis, as opposed to from the perspective of the invention as a whole." *Freedman Seating Co. v. Am. Seating Co.*, 420 F.3d 1350, 1358 (Fed.Cir.2005) (citing *Warner-Jenkinson Co. v. Hilton Davis Chem. Co.*, 520 U.S. 17, 29, 117 S.Ct. 1040, 137 L.Ed.2d 146 (1997)). This doctrine, by its very nature, extends beyond the patent's literal claim scope, because otherwise a finding of no literal infringement would be a foreordained conclusion of no infringement at all. *Ethicon Endo-Surgery v. U.S. Surgical Corp.*, 149 F.3d 1309, 1317 (Fed.Cir.1998). At the same time, however, "[i]f our case law on the doctrine of equivalents makes anything clear, it is that all claim limitations are not entitled to an equal scope of equivalents." *Moore U.S.A., Inc. v. Standard Register Co.*, 229 F.3d 1091, 1106 (Fed.Cir.2000).

"There is no set formula for determining whether a finding of equivalence would vitiate a claim limitation, and thereby violate the all limitations rule. Rather, courts must consider the totality of the circumstances of each case and determine whether the alleged equivalent can be fairly characterized as an insubstantial change from the claimed subject matter without rendering the pertinent limitation meaningless." *Freedman Seating Co.*, 420 F.3d at 1359 (citations omitted). LGE contends that performing some of the write requests is a permissible equivalent to performing

all write requests, and that while performing no write requests may vitiate the claim language, performing some does not. As discussed above, there is inevitably a range of equivalents for performing all write requests, even if that range is narrow. *See Ethicon Endo-Surgery*, 149 F.3d at 1317. If substantially all or nearly all write requests are performed by the accused devices before each matching read request, then the doctrine of equivalents would be fully applicable without vitiating the claim language. Although such scope would be outside of the claim's literal scope, which is true in any doctrine of equivalents analysis, it would not be inconsistent with the language of the claim. Therefore, a genuine issue of material fact exists as to whether the accused device can function within the narrow range of equivalents that we have described above, and we vacate the trial court's grant of summary judgment of noninfringement on this ground.

Conclusion

Accordingly, the judgment of the United States District Court for the Northern District of California is affirmed in-part, reversed in-part, and vacated in-part. The case is remanded for further proceedings in accordance with this opinion.

COSTS

LGE shall have its costs.

AFFIRMED-IN-PART, REVERSED-IN-PART, VACATED-IN-PART, AND REMANDED

UNITED STATES DISTRICT COURT
FOR THE NORTHERN DISTRICT OF CALIFORNIA

LG ELECTRONICS, INC.,
Plaintiff and Counterclaim Defendant,

v.

ASUSTEK COMPUTER, INC., and USUS COMPUTER INTERNATIONAL, INC., BIZCOM ELECTRONICS, INC., COMPAL ELECTRONICS, INC., and SCEPTRE TECHNOLOGIES, INC., FIRST INTERNATIONAL COMPUTER OF AMERICA, INC., and FIRST INTERNATIONAL COMPUTER OF AMERICA, INC., Q-LITY COMPUTER, INC., QUANTA COMPUTER, INC., and QUANTA COMPUTER USA, INC., EVEREX SYSTEMS, INC.,
Defendants and Counter claimants.

No. C 01-00326 CW, No. C 01-01375 CW, No. C 01-01594 CW, No. C 01-02187 CW, No. C 01-01552 CW

2002 U.S. Dist. LEXIS 25956; 65 U.S.P.Q.2D (BNA) 1589

August 20, 2002, Decided
August 20, 2002, Filed

JUDGES: CLAUDIA WILKEN, United States District Judge.

OPINION BY: CLAUDIA WILKEN

ORDER ON CROSS MOTIONS FOR SUMMARY JUDGMENT

Defendants Asustek Computer, Inc. and ASUS Computer International, Inc. (Asustek) and Defendants Q-Lity Computer. Inc., Quanta Computer Inc., and Quanta Computer USA, Inc. (Quanta) move for summary judgment that a cross license agreement between Plaintiff LG Electronics (LGE) and Intel precludes LGE from seeking damages for infringement from Defendants with respect to five of the six patents at issue here.[1] LGE opposes the motion and cross-moves for summary judgment that the LGE-Intel Cross License Agreement (LGE-Intel License) did not exhaust LGE's rights in the five patents and did not create an implied license between LGE and Intel's downstream customers. The matter was heard on June 14, 2002. Having considered all of the papers filed by the parties and oral argument on the motion, the Court grants Defendants' motion for summary judgment and denies LGE's cross motion for summary judgment. (Docket 01-00326 # # 170, 178; Docket 01-02187 # # 144, 156).

LEGAL STANDARD

Summary judgment is properly granted when no genuine and disputed issues of material fact remain, and when, viewing the evidence most favorably to the non-moving party, the movant is clearly entitled to prevail as a matter of law. Fed. R. Civ. P. 56; *Celotex Corp. v. Catrett*, 477 U.S. 317, 322-23, 91 L. Ed. 2d 265, 106 S. Ct. 2548 (1986); *Eisenberg v. Ins. Co. of N. Am.*, 815 F.2d 1285, 1288-89 (9th Cir. 1987).

The moving party bears the burden of showing that there is no material factual dispute. Therefore, the Court must regard as true the opposing party's evidence, if supported by affidavits or other evidentiary material. *Celotex*, 477 U.S. at 324; *Eisenberg*, 815 F.2d at 1289. The Court must draw all reasonable inferences in favor of the

---

[1] Defendant Everex Systems, Inc. joins in the motions of Asustek and Quanta.

party against whom summary judgment is sought. *Matsushita Elec. Co. v. Zenith Radio Corp.*, 475 U.S. 574, 587, 89 L. Ed. 2d 538, 106 S. Ct. 1348 (1986); *Intel Corp. v. Hartford Accident & Indem. Co.*, 952 F.2d 1551, 1558 (9th Cir. 1991).

Material facts which would preclude entry of summary judgment are those which, under applicable substantive law, may affect the outcome of the case. The substantive law will identify which facts are material. *Anderson v. Liberty Lobby, Inc.*, 477 U.S. 242, 248, 91 L. Ed. 2d 202, 106 S. Ct. 2505 (1986).

Where the moving party does not bear the burden of proof on an issue at trial, the moving party may discharge its burden of showing that no genuine issue of material fact remains by demonstrating that "there is an absence of evidence to support the nonmoving party's case." *Celotex*, 477 U.S. at 325. The moving party is not required to produce evidence showing the absence of a material fact on such issues, nor must the moving party support its motion with evidence negating the non-moving party's claim. *Id.*; *see also Lujan v. Nat'l Wildlife Fed'n*, 497 U.S. 871, 885, 111 L. Ed. 2d 695, 110 S. Ct. 3177 (1990); *'Bhan v. NME Hosps., Inc.*, 929 F.2d 1404, 1409 (9th Cir. 1991), *cert. denied*, 502 U.S. 994, 116 L. Ed. 2d 639, 112 S. Ct. 617 (1991). If the moving party shows an absence of evidence to support the non-moving party's case, the burden then shifts to the opposing party to produce "specific evidence, through affidavits or admissible discovery material, to show that the dispute exists." *Bhan*, 929 F.2d at 1409. A complete failure of proof concerning an essential element of the non-moving party's case necessarily renders all other facts immaterial. *Celotex*, 477 U.S. at 323.

Where the moving party bears the burden of proof on an issue at trial, it must, in order to discharge its burden of showing that no genuine issue of material fact remains, make a prima facie showing in support of its position on that issue. *See UA Local 343 v. Nor-Cal Plumbing, Inc.*, 48 F.3d

1465, 1471 (9th Cir. 1994). That is, the moving party must present evidence that, if uncontroverted at trial, would entitle it to prevail on that issue. *See id.*; *see also Int'l Shortstop, Inc. v. Rally's. Inc.*, 939 F.2d 1257, 1264-65 (5th Cir. 1991). Once it has done so, the non-moving party must set forth specific facts controverting the moving party's prima facie case. *See UA Local 343, 48 F.3d at 1471.* The non-moving party's "burden of contradicting [the moving party's] evidence is not negligible." *Id.* This standard does not change merely because resolution of the relevant issue is "highly fact specific." *See id.*

BACKGROUND

LGE owns U.S. Patent Nos. 4,918,645 ('645 patent), 4,939,641 ('641 patent), 4,926,419 ('419 patent), 5,077,733 ('733 patent), and 5,379,379 ('379 patent).

On September 7, 2000, LGE entered into the LGE-Intel License. Pursuant to this agreement, Intel paid to LGE a certain sum of money and agreed to provide an additional amount in discounts on future purchases. The LGE-Intel License gives Intel the right to manufacture products that would otherwise infringe any of the patents owned by LGE, including the patents at issue here. The LGE-Intel License expressly disclaims any implied license to Intel customers who combine products covered by the LGE-Intel License with non-Intel products. Several days prior to entering into the LGE-Intel License, Intel sent a letter to all its customers, including Defendants, informing them that its license with LGE "does not extend, expressly or by implication to any product that you may make by combining an Intel product with any non-Intel product."

Intel produces microprocessors and chipsets that are covered by the LGE-Intel License. Defendants purchase these microprocessors and chipsets from Intel or its authorized distributors and install the licensed Intel microprocessors and chipsets into computers that they

manufacture.[2] LGE contends that many of these computers infringe its patents. A number of the micro processors and chipsets disclosed in LGE's infringement contentions are manufactured by Intel. LGE does not contend that the Intel microprocessors and chipsets, alone, infringe any of the patents at issue here. Rather, LGE's claim charts reveal that the licensed Intel products meet many of the limitations of the patents and, when combined with other components in the accused devices, infringe five of its patents.

For purposes of this motion, Defendants accept LGE's claim construction and argue that under this claim construction, LGE's infringement claims are barred to the extent the alleged infringement depends upon the authorized use of a licensed Intel component for its intended and sole purpose.

DISCUSSION

LGE has brought suit against Asustek, Quanta, and other defendants, alleging infringement of six of its patents. Defendants here move for partial summary judgment of non-infringement with respect to five of the six patents. Defendants argue that one or both of the related doctrines of patent exhaustion and implied license apply to the five patents. Both doctrines may apply when a patentee has licensed its patent or sold a device embodying the patent. Both doctrines limit the patentee's right to claim infringement against downstream users of its patent or sellers of devices that embody the patent. Although the patent exhaustion doctrine and the doctrine of implied license operate in similar fashion, with often indistinguishable results, different legal theories underlie the two doctrines.

The patent exhaustion doctrine (also known as the "first sale rule") is derived from the statutory grant of exclusivity

---

[2] To the extent that Defendants manufacture products using non-Intel microprocessors and chipsets, those products are not at issue in this motion.

to the patentee. Once a patentee abandons its statutory right to exclusivity through the sale of a patented product or the license of the patent itself, there is no statutory basis for the patentee to impose restrictions or secure royalties on the subsequent use of the invention. *Bloomer v. McQuewan*, 55 U.S. 539, 549, 14 L. Ed. 532 (1852) ("The franchise which the patent grants, consists altogether in the right to exclude every one from making, using, or vending the thing patented, without the permission of the patentee. This is all that he obtains by the patent. And when he sells the exclusive privilege of making or vending it for use in a particular place, the purchaser buys a portion of confers."). When a patentee has sold "the thing patented," he has exhausted his right to exclusivity in the invention. *Wilson v. Rousseau*, 45 U.S. 646, 683, 11 L. Ed. 1141 (1846). "When the patentee, or the person having his rights, sells a machine or instrument whose sole value is in its use, he receives the consideration for its use and he parts with the right to restrict that use." *Adams v. Burke*, 84 U.S. 453, 456, 21 L. Ed. 700, 1885 Dec. Comm'r Pat. 438 (1873).

The implied license doctrine, on the other hand, derives not from statute, but from principles of equity.

> The relatively few instances where implied licenses hive been found rely on the doctrine of equitable estoppel. One common thread in cases in which equitable estoppel applies is that the actor committed himself to act, and indeed acted, as a direct consequence of another's conduct. Thus, an implied license cannot arise out of the unilateral expectations or even reasonable hopes of one party. One must have been led to take action by the conduct of the other party.

Bandag, Inc. v. Al Bolser's Tire Stores, Inc., 750 F.2d 903, 925 (Fed. Cir. 1984) *(quoting Stickle v. Heublein, Inc.*, 716 F.2d 1550, 1559 (Fed. Cir. 1983)). In some circumstances, therefore, although a patent may not be exhausted such that the patentee has abandoned its statutory right to exclude,

the patentee may, through its own conduct, grant an implied license to practice the patent to certain downstream purchasers. Principles of equity determine whether the patentee's conduct has created such a license. "A mere sale does not import a license except where the circumstances plainly indicate that the grant of a license should be inferred." *Id.* (quoting *Hunt v. Armour & Co.*, 185 F.2d 722, 729 (7th Cir. 1950)).

In sum, the patent exhaustion doctrine applies when a patentee has, in essence, sold its statutory right to exclusivity through the unrestricted sale or license of the patent. A patentee who has not abandoned its statutory right to exclude others from the use of its patent may nevertheless, through conduct that induces reliance, grant to particular parties an implied license to practice the patent. Although similar in effect, the doctrines require distinct analysis. To determine if a patent was exhausted, the court must assess whether the terms of the patentee's sale remove the invention from the protection of the patent law. The determination of whether an implied license exists, however, is necessarily more fact specific. The court must determine whether the patentee's acts led the accused infringer to believe it had acquired the right to practice the patented invention.

A. Patent Exhaustion

The patent exhaustion doctrine was articulated by the Supreme Court over a century ago. *Adams*, 84 U.S. at 456. The doctrine is designed to prevent a patentee from receiving a double royalty on a single patented invention. To this end, "an unconditional sale of a patented device exhausts the patentee's right to control the purchaser's use of the device thereafter." *B. Braun Medical. Inc. v. Abbott Lab.*, 124 F.3d 1419, 1426 (Fed. Cir. 1997).

Defendants argue that this standard is met in the present circumstance. Intel's microprocessor and chipsets are specifically covered by the LGE-Intel License. Declaration of Quoc Huy Do (Do Dec.), Ex. A (LGE-Intel

License) §§ 1.13, 1.6, 1.24 (chipsets and microprocessors are Intel Licensed Products within the meaning of the agreement). The License authorizes Intel to "make, use, sell (directly or indirectly), offer to sell, import and otherwise dispose of all Intel Licensed Products" without infringing LGE's patents. The unrestricted license granted by LGE to Intel is equivalent to a "sale" for purposes of the patent exhaustion doctrine. *United States v. Masonite Corp.*, 316 U.S. 265, 278, 86 L. Ed. 1461, 62 S. Ct. 1070, 1942 Dec. Comm'r Pat. 777 (1942) ("This Court has quite consistently refused to allow the form into which the parties chose to cast the transaction to govern. The test has been whether or not there has been such a disposition of the article that it may fairly be said that the patentee has received his reward for the use of the article.") Therefore, because LGE licensed to Intel the right to practice LGE's patents and sell products embodying its patents—and Intel's production and sale of its microprocessors and chipsets are covered by this agreement—LGE forfeited its potential infringement claims against those who legitimately purchase and use the Intel microprocessor and chipset.

LGE, however, points out that the Intel microprocessor and chipset do not read on any of the five patents at issue in this motion. The Intel-produced components include some elements of the patents, but those components must be combined with other technology to infringe the patents. LGE argues that it did not exhaust its rights in the patents in suit by licensing Intel to make a product that does not infringe those patents.

Defendants reject LGE's narrow reading of the patent exhaustion doctrine. They contend that the licensing of the microprocessor and chipset exhausted the patents in suit because the microprocessor must be combined with other computer components in an a manner that allegedly infringes LGE's patents in order to function. Declaration of Raymond Chen (Chen Dec.) PP 11-14; Declaration of Danny Tang (Tang Dec.) PPP 4-5. Defendants point out that

simply by installing the microprocessor in a computer in accord with its intended and sole purpose, Defendants allegedly infringed LGE's five patents. *See* LGE 3-1 Supp. Discl., Tabs 1-5 (identifying Intel chipsets as integral to its infringement claims). In other words, the Intel microprocessor has no non-infringing use. Consequently, the LGE-Intel License not only exhausted LGE's rights in the Licensed Products, but also exhausted LGE's right to claim infringement against any device that uses the licensed microprocessor and chipset for its intended purpose in the manner recommended by Intel.

In support of their contention that the License exhausted LGE's patent rights with respect to necessary and contemplated combinations of Intel microprocessors with other technology, Defendants rely on *United States v. Univis Lens Co.*, 316 U.S. 241, 86 L. Ed. 1408, 62 S. Ct. 1088, 1942 Dec. Comm'r Pat. 789 (1942).

1. United States v. Univis Lens Co.

In Univis Lens, the United States alleged that a resale price maintenance scheme implemented by the defendant Univis Lens Corporation (Univis Corporation) violated the Sherman Antitrust Act. Univis Corporation owned several patents relating to the manufacture of multi-focal lenses. 316 U.S. at 246-247. It maintained downstream prices on finished lenses through a detailed licensing structure. First, Univis Corporation licensed to Univis Lens Company (Lens Company) the right to manufacture "lens blanks." Lens blanks "are rough opaque pieces of glass of suitable size, design and composition for use when ground and polished, as multifocal lenses in eyeglasses." *Id.* at 244. The manufacture of lens blanks was a necessary first step in producing multi-focal lenses.

In addition, Univis Corporation issued licenses to three classes of downstream distributors of the lens blanks. Wholesalers were "authorized to purchase the blanks from the Lens Company, to finish them by grinding and polishing, and to sell them to prescription licensees at prices fixed by

[Univis] Corporation." *Id.* at 244. Licenses granted to "finishing retailers" had similar provisions: the finishing retailers were authorized to purchase lens blanks from the Lens Company, grind and polish and adjust them, and sell them to consumers at Prescribed prices. *Id.* at 244 "Prescription retailers," unlike wholesalers and "finishing retailers," did not have the ability to grind and finish lenses. They were authorized to purchase finished lenses from a licensed wholesaler, adjust them to the needs of a specific consumer, and sell them at prices determined by the corporation. *Id.* at 245.

It was undisputed that "the invention of only a single lens patent is utilized in making each blank and finishing it as a lens." *Id.* at 248. The Court "assumed without deciding" that the wholesalers and finishing retailers practiced this patent when they ground and polished the lens blanks. *Id.* at 248-49. For purposes of its decision, therefore, the Court held that the manufacture of lens blanks did not practice the patent at issue. Rather, the patent was not practiced until the multi-focal lens was produced by the wholesalers or finishing retailers. Univis Corporation argued that it could lawfully condition a license to practice its patent on the maintenance by its licensees of prescribed prices.

The Court rejected this argument. The Court noted that "each blank ... embodies essential features of the patented device and is without utility until it is ground and polished as the finished lens of the patent.... The only use to which [the lens blank] could be put and the only object of the sale is to enable the (wholesaler and finishing retailers] to grind and polish it for use as a lens by the prospective wearer." *Id.* at 249. In this circumstance, the Court found that the corporation had relinquished its patent monopoly when its licensee sold lens blanks to wholesalers and finishing retailers.

> An incident to the purchase of any article, whether patented or unpatented, is the right to

> use and sell it, and upon familiar principles the authorized sale of an article which is capable of use only in practicing the patent is a relinquishment of the patent monopoly with respect to the article Bold. Sale of a lens blank by the patentee or by his licensee is thus in itself both a complete transfer of ownership of the blank, which is within the protection of the patent law, and a license to practice the final stage of the patent procedure. In the present case the entire consideration and compensation for both is the purchase price paid by the finishing licensee to the Lens Company.

Id.

The Court referred to several cases applying the doctrine of patent exhaustion as additional support for its holding. "The patentee may surrender his monopoly in whole by the sale of his patent .... His monopoly remains so long as he retains the ownership of the patented article. But the sale of it exhausts the monopoly in that article and the patentee may not thereafter, by virtue of his patent, control the use or disposition of the article." *Id.* at 250 (citing *Bloomer v. McQuewan*, 55 U.S. 539, 14 L. Ed. 532 (1852); *Adams v. Burke*, 84 U.S. 453, 21 L. Ed. 700, 1885 Dec. Comm'r Pat. 438 (1873); *Hobbie v. Jennison*, 149 U.S. 355, 37 L. Ed. 766, 13 S. Ct. 879, 1893 Dec. Comm'r Pat. 352 (1893)).

Thus, the Court concluded:

> We think that all the considerations which support these results lead to the conclusion that where one has sold an uncompleted article which, because it embodies essential features of his patented invention, is within the protection of his patent, and has destined the article to be finished by the purchaser in conformity to the patent, he has sold his invention so far as it is or may be embodied in that particular article.

Id. at 250-51.

The United States District Court for the Eastern District of Texas applied Univis Lens to facts similar to those at issue here. In *Cyrix Corp. v. Intel Corp.*, 846 F. Supp. 522 (E.D. Tex. 1994), Cyrix, a manufacturer of personal computers, sought declaratory relief that it did not infringe the defendant Intel's patent. In a separate suit, Intel sought a judgment that Cyrix infringed the '338 patent owned by Intel. The actions were consolidated.

Claim 1, the only independent claim of the '338 patent, was "directed to a memory management circuit for a microprocessor device." 846 F. Supp. at 527. Claims 2 and 6 of the patent covered the use of the claim 1 device in combination with external memory. *Id.* at 528. Cyrix had purchased microprocessors from a licensee of Intel and installed them in its computers in combination with external memory. *Id.* at 525. The parties stipulated that the Intel microprocessors purchased by Cyrix embodied claim 1 of the patent. *Id.* The parties further 'stipulated that Intel had exhausted its patent rights with respect to the microprocessor because Cyrix's purchase of the device had been an authorized sale from a licensed manufacturer. *Id.* at 525. Intel, however, contended that Cyrix infringed claims 2 and 6 of the patent by combining its licensed microprocessor with external memory.

The court found that the authorized license and sale of the claim 1 device also exhausted Intel's rights pursuant to claims, 2 and 6 of the patent. Critical to this holding was the court's finding that the

> microprocessors have no uses unless they are combined with external memory ... as described by claims 2 and 6. Thus to the extent that Intel has asserted that claim 1 of the '338 patent covers Cyrix's microprocessors—both as made and sold to Cyrix by ST and TI (the licensees], and as used and re-sold by Cyrix and/or its customers—those microprocessors cannot be used for any purpose without necessarily

> forming the combination of, and infringing, claims 2 and 6.

Id. at 537. Because the patented device had no utility other than in an infringing combination, the court held that Univis Lens controlled. "Cyrix's microprocessors thus are like the lens blanks in Univis Lens which, although completed lens blanks, had no use other than to be ground into finished lenses in accordance with patents owned by the Lens Company." *Id.* at 540.

Citing *Univis Lens*, the Cyrix court held, "The patent exhaustion doctrine is so strong that it applies even to an incomplete product that has no substantial use other than to be further manufactured into a completed patented and allegedly infringing article." *Id.*; *see also Minebea Co. Ltd. v. Papst*, 13 F. Supp. 2d 35, 44 (D.D.C. 1998) ("One aspect of the patent exhaustion doctrine provides that when a patent holder sells 'an incomplete product that has no substantial use other than to be further manufactured into a completed patented and allegedly infringing article,' the patent holder cannot claim that the final product infringes his patent.") (citing Cyrix and Univis Lens).[3]

---

[3] LGE contends that *Cyrix* is distinguishable from the case at bar because, in *Cyrix*, the product purchased by the defendant embodied one claim of the patent-in-suit while the Intel microprocessors and chipsets at issue here do not, on their own, read on any claims of the allegedly infringed patents. Consequently, LGE argues that *Cyrix* supports its contention that a patent is exhausted only by the sale of a product that fully embodies at least one claim in the patent.

LGE's interpretation of *Cyrix* is not consistent with the language or the rationale of that order. In describing the patented product at issue in that case, the *Cyrix* court emphasized that the microprocessors were, like the lens blanks in *Univis Lens*, "unfinished" and "need[ed] to be combined with external memory to be used." 846 F. Supp. at 540. Thus, the *Cyrix* court discussed in detail the lack of any non-infringing use for the device at issue and held, "because the intended use of Cyrix's microprocessors is with external memory ... neither Cyrix nor its customers can infringe claims 2 or 6 of the '338 patent." *Id.*

This reasoning is not consistent with LGE's contention that the fact that the microprocessor embodied claim 1 of the patent rendered the

Defendants contend that under *Univis Lens*, as properly applied in *Cyrix*, the patent exhaustion doctrine precludes LGE from seeking damages from Defendants. Intel's use of LGE's patents in its microprocessors was pursuant to a valid licensing agreement. Defendants, in turn, purchased the licensed products and installed them in computers in accordance with the specifications provided by Intel. Defendants contend that, like the lens blanks in Univis and the microprocessors in Cyrix, the Intel microprocessors have no utility except as components in computer systems like those manufactured by Defendants. Consequently, LGE's rights under the five patents at issue here were exhausted by the LGE-Intel Cross License Agreement.[4]

As noted above, LGE argues that the patent exhaustion doctrine applies only to the sale of a patented device and, because the Intel microprocessor does not, on its own, embody any of the claims in the five patents at issue here, LGE's rights under those patents are not exhausted. LGE contends that *Univis Lens* does not stand for a contrary position because *Univis Lens* did not deal with the patent exhaustion doctrine at all. Rather, *Univis Lens* applied the related but distinct doctrine of implied license.

As the above quoted portions of the decision make clear, however, the *Univis* Court relied heavily on precedent articulating the patent exhaustion doctrine. The Court

---

entire patent exhausted. Had the *Cyrix* court adopted this reasoning, it would not have needed to discuss non-infringing' uses. Nor would the fact that the microprocessor only functioned in combination with other components have been relevant. Rather, the parties' stipulation that the device embodied claim 1 of the would, patent alone, have been sufficient to determine that the patent was exhausted.

Consequently, the holding and reasoning of *Cyrix* is persuasive authority for the proposition that the sale or license of an essential element of a patented device may exhaust the patentee's statutory right to exclude others from making, selling or using that device.

[4] To the extent that the allegedly infringing products do not use Intel microprocessors and chipsets that are covered by the LGE-Intel License, the patent exhaustion doctrine is not applicable.

emphasized that Univis Corporation, by licensing the lens blanks, had "received [its] reward for the use of [its] invention." Consequently, "the patent law affords no basis for restraining the use or enjoyment of the thing sold." *Univis Lens*, 316 U.S. at 251. This holding is based on an interpretation of the patent statute and is derived from the principles underlying the patent exhaustion doctrine.

Significantly, the Court did not, as an implied license analysis would require, apply equitable principles to determine if Univis Corporation had acted in a manner that induced wholesalers and retailers to believe they had an unconditional right to make and sell the patented invention. In fact, the circumstances in *Univis* suggest that an implied license would not have been appropriate because Univis Corporation clearly indicated to both F wholesalers and retailers—through separate licensing agreements—that their purchase of lens blanks did not, on its own, include a license to practice the patent. *Id.* at 245 ("All the licenses to wholesalers and retailers recite the Corporation's ownership of the lens patents and purport to confer on the licensee the privilege of selling the patented invention in the manner and to the extent stated.")

The Court found that by licensing the right to manufacture and sell lens blanks (the first step in practicing the patent in suit) and separately licensing the right to grind and finish lenses (the final step in the patent), Univis Corporation had impermissibly extended its patent rights. Therefore, the Court held that the authorized sale of the lens blanks "relinquished" the patent monopoly. *Id.* at 249. In so finding, the Court built on earlier cases articulating the doctrine of patent exhaustion.

2. Federal Circuit Cases after Univis Lens

LGE also argues that although the *Univis Lens* Court may have relied on patent exhaustion cases to reach its conclusion, subsequent developments have refined the distinctions between the patent exhaustion doctrine and the grant of an implied license. According to LGE, these cases

reveal that, in retrospect, *Univis* was an implied license case because it did not deal with a "patented product" as required for the patent exhaustion doctrine to apply.

According to LGE, this critical limitation on the patent exhaustion doctrine was articulated in two more recent federal circuit cases, *Bandag* and *Glass Equip. Dev., Inc. v. Besten, Inc.*, 174 F.3d 1337 (Fed. Cir. 1999). In both *Bandag* and *Glass Equipment*, the court found the patent exhaustion doctrine inapplicable in the circumstances presented. In *Bandag*, the plaintiff had sold a non-patented device, a retreading machine, which was subsequently re-sold to the defendant. The defendant used the device to infringe a patent owned by plaintiff which covered a particular method of retreading tires. The defendant argued that the sale of the retreading machine precluded the plaintiff from claiming infringement of the method patent because the machine was designed to carry out its function in accord with the patented method. The court held that the patent exhaustion doctrine was "inapplicable here because the claims of the Carver patent are directed to a 'method of retreading' and cannot read on the equipment [the defendant) used in its cold processing recapping." 750 F.2d at 923-924. The court then analyzed the facts to determine if the sale of the device included an implied license to practice the method patent.

Similarly, in *Glass Equipment*, the plaintiff owned patents covering both a device—"a spacer frame assembly"—and a method for using that device. The plaintiff licensed a manufacturer to make corner keys, one of the components of the patented frame assembly. The manufacturer, in turn, sold the corner keys to an unlicensed customer who attempted to produce the patented frame assembly. 174 F.3d at 1340. The district court held that the purchase of the corner keys from a licensed manufacturer created an implied license to practice the method patents. *Id.* The Federal Circuit reversed.

In a footnote, the court discussed why the case was properly analyzed under the implied license doctrine rather than the patent exhaustion doctrine.

> This case involves the question of whether the sale of an unpatented article grants an implied license to practice one or more methods claimed in a separate patent. This case does not involve the so-called 'first sale' doctrine .... Here, where the articles sold were corner keys, which are not themselves patented (they are merely embodiments of an unpatented element of the '195 patent claims) and the license issue concerns [the plaintiffs] right to exclude concerning the method patent, not the apparatus patent, the first sale doctrine is inapplicable to the analysis of the facts.

Id. at 1342 n. 1 (emphasis in original).

LGE contends that pursuant to this footnote in *Glass Equipment*, the patent exhaustion doctrine does not apply to "unpatented elements" of a patent in suit. The Intel microprocessors and chipsets, moreover, merely embody some elements of the broader patents in suit. Consequently, the patent exhaustion doctrine is inapplicable here.

However, the key fact in both *Bandag* and *Glass Equipment* was not whether the device utilized by the defendant was patented or not. More important was the fact that the plaintiffs in both cases alleged infringement of a method patent, and not infringement of an apparatus patent. The court, in both cases, held that the sale of a device, whether patented or unpatented, could not exhaust the patentee's rights under a separate patent teaching a method of accomplishing a specific function. *Bandag*, 780 F.2d at 924 (method patent cannot read on specific equipment); *Glass Equip.*, 174 F.3d at 1342 n.1 (patent exhaustion doctrine inapplicable because infringement claim concerned method patent, not apparatus patent).

Consequently, neither Bandag nor Glass Equipment provide a basis for adopting the limited interpretation of the patent exhaustion doctrine proffered by LGE.

LGE also relies on *Met-Coil Sys. Corp. v. Korners Unlimited, Inc.*, 803 F.2d 684 (Fed. Cir. 1986) for the proposition that *Univis* must be analyzed as an implied license case. LGE argues that the Federal Circuit held in *Met-Coil* that *Univis* was an implied license case and that this holding is binding here. In *Bandag*, moreover, the Federal Circuit held that a license will be inferred only if two conditions are met: the device at issue has no non-infringing use and equitable considerations counsel in favor of an implied license. 750 F.2d at 924, 925. LGE argues that neither of these two conditions are met here. Consequently, LGE argues that the Court is obliged to apply the two-step implied license analysis and application of that doctrine requires the Court to grant summary judgment to LGE.

In *Met-Coil*, the plaintiff owned a patent which claimed both an apparatus and a method for connecting sections of metal ducts of the kind used in heating and air conditioning systems. 803 F.2d at 685. Met-Coil made and sold "roll-forming" machines that were used to practice the claimed invention. The defendant, Korners, made corner pieces, which were sold to Met-Coil's customers for use in practicing the patent. Met-Coil sued Korners for contributory infringement. The district court held that the roll-forming machine was an "essential element" of the patent that had "no use other than in the practice of the duct connecting system." *Met-Coil Systems Corp. v. Korners Unlimited, Inc.*, 628 F. Supp. 130, 132 (W.D. Pa. 1986). The district court concluded that, under *Univis Lens*, the purchasers of the roll-forming machines could not infringe the patents because that case "limits a patent owner's efforts to control his invention after the sale of an essential element." *Id.*

The district court in *Met-Coil* referred to *Univis Lens* as an "implied license" case. *Id.* at 133 ("*Univis* ... dealt with

the implied license to complete an uncompleted article and ... must control the disposition of the present case."). However, what matters is not the label used to describe the doctrine, but the underlying rationale. The district court in *Met-Coil* did not assess the equities between the parties to determine whether "the circumstances plainly indicate that the grant of a license should be inferred." *Bandag*, 720 F.2d at 925. It is clear, therefore, that the district court *in Met-Coil*, like the *Cyrix* court, properly interpreted *Univis Lens* to hold that the sale of an essential element of a patent that has no use other than in the practice of the patent, exhausts the patentee's rights in that patent.

In fact, Met-Coil appealed the district court's order on the grounds that the court should have applied the implied license standard *Bandag*,from rather than the *Univis Lens* standard. *Met-Coil*, 803 F.2d at 686 ("On appeal, Met-Coil urges that the district court erred in relying on *Univis*. To support this proposition, Met-Coil cites *Bandag*."). The Federal Circuit affirmed the district court. In doing so, the appellate court applied the two-prong test from *Bandag* and held that even under this standard, judgment for the defendant was appropriate.

LGE argues that in affirming the district court judgment, the Federal Circuit also overruled the district court's reasoning, specifically its reliance on *Univis Lens*. However, there is no language in the opinion supporting this contention. Rather, the district court and Federal Circuit opinions, read together, suggest that the Federal Circuit held that summary judgment for Korners was appropriate under either the *Univis Lens* or the *Bandag* standard and refused to reach the question of which precedent was more on point.[5] In *Met-Coil*, the Federal Circuit did not

---

[5] Alternatively the fact that Met-Coil alleged infringement of both a method patent and an apparatus patent may have informed the Federal Circuit decision. As noted above, the patent exhaustion doctrine does not apply when the patent-in-suit is a method patent. Consequently, the appellate court may have thought it necessary to apply *Bandag* to the

distinguish *Univis Lens*, nor did it criticize the district court's reliance on *Univis Lens*, nor did it indicate that *Univis Lens* had been refined or modified by subsequent cases. Therefore, there is no binding authority requiring this Court to treat *Univis Lens* as an implied license case. As noted above, the case does not lend itself to such a reading. Rather, consistent with the Supreme Court's holding in *Univis Lens*, the patent exhaustion doctrine applies to the sale of unpatented items that have no other function but as components in a finished, patented device.[6]

B. Non-Infringing Uses

To succeed on their motion for summary judgment, Defendants have the burden of presenting undisputed facts sufficient to show that the Intel microprocessor and chipset have no reasonable non-infringing use.[7] As noted above, it is undisputed that the microprocessors and chipsets

---

method patent at issue, while affirming the district court's judgment with respect to the apparatus patent.

[6] After the hearing on this motion, LGE filed a motion for leave to bring supplemental authority to the Court's attention. That motion was granted on July 25, 2002 (Docket # 238). The authority identified by LGE is *Anton/Bauer v. PAG, Ltd.*, 2002 U.S. Dist. LEXIS 11583, 2002 WL 1359673 (D. Conn. June 13, 2002). LGE contends that Anton/Bauer supports its contention that *Met-Coil* refined the Supreme Court's holding in *Univis Lens*. However, *Anton/Bauer* does not discuss the distinction between the patent exhaustion doctrine and the granting of an implied license, it is factually dissimilar from the case at bar, and it is not binding on this Court. Therefore, the Court does not find *Anton/Bauer* persuasive authority for LGE's interpretation of *Univis Lens*.

[7] Consistent with its argument that the patent exhaustion doctrine applies only to the sale of patented products, LGE also argues that "reasonable non-infringing use" is not an element of this defense. Rather, LGE argues that the sale of a patented device exhausts the patent regardless of whether the device may be used in a non-infringing manner. However, as already noted, the patent exhaustion doctrine also applies to the sale of non-patented devices which have no use other than as components in a device that practices the patent. When such a circumstance is presented, the party raising the defense must also show that the device has no reasonable non-infringing use. *Cyrix*, 846 F. Supp. at 535.

purchased by Defendants are Licensed Products within the meaning of the LGE-Intel License. It is also undisputed that Intel or its authorized agent sells microprocessors and chipsets to Defendants. Declaration of Le-Chin Chang (Chang Dec.) PP 3-4; Chen Dec. P 8. Incident to the sale of the Licensed Products, Intel provides to Defendants technical specifications necessary to incorporate the microprocessors and chipsets into Defendants' products. Declaration of Danny Tang (Tang Dec.) PP 11-12; Chen Dec. PP 11-12. The failure to follow Intel's design specification would render Defendants' computers inoperable. Chen Dec. P 13; Tang Dec. P 5. LGE claims that by incorporating the Intel microprocessors and chipsets into their computers in accordance with Intel's design specifications, Defendants infringe five of LGE's patents. *See* LGE 3-1 Supp. Discl., Tabs 1-5 (identifying Intel chipsets as integral to its infringement claims).

This evidence, taken together, establishes that the Intel microprocessors and chipsets are designed and intended by Intel to be used in computers in accordance with Intel's technical specification and that such use is the sole contemplated use for the devices. This is sufficient to satisfy Defendants' prima facie case that there are no reasonable non-infringing uses and the burden, therefore, shifts to LGE to refute this showing. *Met-Coil*, 803 F.2d at 687.

LGE proffers two non-infringing uses for the Intel microprocessors and chipsets. First, LGE argues that Defendants' use of the Licensed Products in their computers would not infringe LGE's patents if Defendants only sold their computers outside the United States. See *Ortho Pharmaceutical Corp. v. Genetics Institute, Inc.*, 52 F.3d 1026, 1033 (Fed. Cir. 1995) ("a United States patent grants rights to exclude others from making, using and selling the patented invention only in the United States"). LGE contends that the use and sale of computers incorporating the Intel microprocessors and chipsets outside the

geographic scope of the patent laws would constitute a reasonable, non-infringing.[8]

Including foreign use as an example of a reasonable, non-infringing use in this context would eviscerate the defenses of patent exhaustion and implied license. As a general rule, an alleged infringer could always limit its infringing activities to foreign jurisdictions, yet no court has as yet found this fact to constitute a reasonable non-infringing use. Rather, courts have uniformly emphasized that a non-infringing use must be a use that does not practice the patent. *See e.g. Met-Coil*, 803 F.2d at 685 (parts had no use other than "in the practice" of the patented system); *Bandag*, 750 F.2d at 925 (reasonable non-infringing uses include resale of equipment or use of equipment as replacement parts).

In the context of contributory infringement, courts have rejected the argument that one could establish a "substantial non-infringing use" by focusing on activity outside the United States. *Lucas Aerospace, Ltd. v. Unison Indus., L.P.*, 899 F. Supp. 1268, 1287 (D. Del. 1995). In that context, the Lucas Aerospace court looked to whether the component has a "use other than to be combined with other items that together fall within the metes and bounds of the claims of the patent." *Id.* Precedent and policy dictate that

---

[8] At the hearing on this motion, LGE refined this argument, contending that foreign use is not, per se, a reasonable non-infringing use, but that such use is reasonable for these Defendants. LGE argued that because Defendants Quanta and Asustek are foreign corporations with manufacturing facilities outside the United States, it is reasonable for these Defendants to restrict their sales to purchasers outside the United States. Defendants' domicile and the location of their production facilities are not relevant to determining whether there are reasonable, non-infringing uses for Intel chipsets and microprocessors. Such a distinction would be unworkable in practice as many corporations, both foreign and domestic, maintain multiple manufacturing facilities both within and outside the United States. LGE offers no principled manner to determine when a corporation has sufficient contacts outside the United States such that it is reasonable for it to abandon sales within these borders.

a similar rule be adopted with respect to the defenses of patent exhaustion and implied license.[9]

LGE also argues that the Intel microprocessors and chipsets can be used as replacement parts. It is undisputed that the Intel microprocessors and chipsets that are the subject of the License Agreement cannot be used as replacement parts for an earlier generation of Intel products because the new generation of Intel microprocessors and chipsets have different socket configurations than previous products. Do Dec. PP 11-12; Chen Dec. P 19. LGE nevertheless contends that the Intel microprocessors and chipsets can be used as replacements parts for new generation processors that no longer function properly.

In support of its contention that the Intel microprocessors and chipsets have a reasonable, non-infringing use as replacement parts for LGE licensed products, LGE again cites Bandag. In that case, the court found the authorized purchase of certain equipment did not create an implied license to practice a method patent owned by the plaintiff. The court identified several potential non-infringing uses for the equipment, including reselling the equipment either as a package or piecemeal, using the equipment in a manner that did not infringe the method patent at issue, refraining from using the equipment until expiration of the patent in eighteen months, and using the equipment as replacement parts. 750 F.2d at 923-925.

---

[9] In *Bandag*, 750 F.2d at 925, the court noted, in addition to several non-infringing uses, that "it may even have been reasonable to refrain from operating the equipment until expiration of the patent [in eighteen months] rather than to risk infringement." LGE argues that there is no principled distinction between an otherwise infringing use outside the temporal scope of the patent and one outside the geographic scope. However, the 'Bandag court's statement that a temporal limitation on use of the patented device "may" be reasonable was dependant on the facts of that case where the patent had almost expired. The geographic limitation urged by LGE would have no such limits and would apply to every case where the defenses of patent exhaustion (with respect to a non-patented component) or implied license was raised.

Given the multiple potential non-infringing uses, the Bandag court held that the defendant had not satisfied its burden of showing that "any of these options would have been unwise from a business standpoint." *Id.* at 925.

The microprocessors and chipsets at issue here cannot be disassembled and they cannot be used to carry out a non-patented function. Nor would it be reasonable for Defendants to refrain from manufacturing computers for the life of LGE's patents. The limited utility off the microprocessors and chipsets as replacement parts is not, alone, a sufficient non-infringing use. Defendants are manufacturers of computers. It would not be wise from a business standpoint for them to purchase computer components solely for resale to LGE or Intel, the licensor and manufacturer of the products to be sold. Consequently, unlike Bandag, Defendants have satisfied their burden of showing that potential non-infringing uses would be "unwise from a business standpoint." *Id.*

C. Implied License

The parties also cross move for summary judgment on whether the LGE-Intel License governing the Intel microprocessors and chipsets provided an implied license to purchasers of the licensed products to use those products for their intended purpose without infringing any LGE patents. To prevail on an implied license defense, the alleged infringer must show both that the device sold by the patentee has no reasonable, non-infringing use, and that "the circumstances plainly indicate that the grant of a license should be inferred." *Id.*; *Mel-Coil*, 803 P.2d at 686. This second requirement will be met when the elements of equitable estoppel are satisfied. *Bandag*, 750 F.2d at 925. In other words, if the patentee's actions lead the alleged infringer to believe that it has a license to use the invention and, in reliance on those actions, the alleged infringer practices the patent, the court may determine that the patentee's actions created an implied license.

Defendants contend that simply by entering into the LGE-Intel License LGE acted to induce reliance by Defendants. However, the License itself expressly disclaims the creation of an implied license. LGE-Intel License § 3.8. Moreover, before the LGE-Intel License became effective, Intel sent letters to Defendants advising them of the existence of the license, but expressly notifying them that "while this patent license that LGE granted to Intel covers Intel's products, it does not extend, expressly or by implication, to any product that you may make by combining an Intel product with any non-Intel product." Declaration of David M. Morris (Morris Dec.) Ex. 14, 15.

LGE contends that because Intel expressly informed Defendants that the LGE-Intel License provided no corresponding license to Defendants, Defendants cannot credibly argue that they "acted as a direct consequence of another's conduct" or that they were "led to take action by the conduct of the other party." *Bandag*, 750 F.2d at 925.

The question presented is whether the express disclaimer of the grant of an implied license was effective. However, under the patent exhaustion doctrine as articulated in *Univis Lens*, LGE may not enforce its patents against purchasers of Intel microprocessors and chipsets who use those devices for their intended and sole purpose. Therefore, the Court need not determine whether the implied license doctrine also applies to the sale of Intel microprocessors and chipsets. The cross motions for summary judgment on the defense of implied license are therefore denied as moot.[10]

---

[10] LGE also argues that Defendants' motion should be denied pursuant to *Federal Rule of Civil Procedure 56(f)*. however, the discovery LGE seeks relates to the circumstances of Defendants' purchase of the Intel components. This discovery would be relevant to the question of whether circumstances show that the grant of a license should be implied. LGE's motion pursuant to *Rule 56(f)* is also moot.

CONCLUSION

For the foregoing reasons, Defendants' motion for summary judgment is granted (Docket 01-00326 # 170; Docket 01-02187 # 144). LGE's cross motion is correspondingly denied (Docket 01-00326 # 178; Docket 01-02187 # 156).

Dated: AUG 20 2002

CLAUDIA WILKEN
United States District Judge

UNITED STATES DISTRICT COURT FOR THE NORTHERN DISTRICT OF CALIFORNIA.

LG ELECTRONICS, INC.,
Plaintiff and Counterclaim Defendant

v.

ASUSTEK COMPUTER, INC., and USUS Computer International, Inc.,

Bizcom Electronics, Inc., Compal Electronics, Inc., and Sceptre Technologies, Inc.,

First International Computer, Inc. and First International Computer of America, Inc.,

Q-Lity Computer, Inc., Quanta Computer, Inc., and Quanta Computer USA, Inc.,

Everex Systems, Inc., Defendants and Counterclaimants.

Nos. C 01-00326 CW, C 01-01375 CW, C 01-01594 CW, C 01-02187 CW, C 01-01552 CW.

Feb. 6, 2003.

ORDER GRANTING IN PART DEFENDANTS' MOTION FOR SUMMARY ADJUDICATION AND GRANTING IN PART PLAINTIFF'S MOTION FOR SUMMARY ADJUDICATION

WILKEN, District Judge.

In these five lawsuits, Plaintiff LG Electronics, Inc. (LGE) raises claims of patent infringement against

Defendant companies. In May, 2002, Defendants Asustek Computer, Inc. and Asus Computer International, Inc. (Asustek) and Defendants Q-Lity Computer, Inc., Quanta Computer Inc., and Quanta Computer USA, Inc. (Quanta) moved for summary adjudication. The Court granted Defendants Asustek and Quanta's motions on August 20, 2002. In September, 2002, Defendants First International Computer, Inc. and First International Computer of America, Inc. (FIC) and Defendants Compal Electronics, Inc., Bizcom Electronics, Inc., and Sceptre Technologies (Compal) moved for summary adjudication, arguing that this Court's August 20 Order also entitled them to summary adjudication. LGE opposed the motion, citing reasons other than those raised in its opposition to Asustek and Quanta's motions why summary adjudication would not be proper. LGE also cross-moved for summary adjudication of the same issues. After considering the papers and oral argument on the motions, the Court concluded that LGE's opposition and cross-motion should be deemed a request for reconsideration of the Court's August 20, 2002 Order. The Court provided the parties with the opportunity to submit additional briefing. After considering all of the papers filed by all parties and oral argument on all motions, the Court now clarifies its prior grant of summary adjudication in favor of Defendants Asustek and Quanta, grants summary adjudication in favor of all Defendants on Defendants' claim that the patent exhaustion doctrine precludes them from being liable for infringement of LGE's device patents, and grants summary adjudication in favor of LGE on LGE's claim that Defendants do not have an implied license to practice LGE's method patents.

BACKGROUND

LGE owns U.S. Patent Nos. 4,918,645, 4,939,641, 4,962,419, 5,077,733, 5,379,379, and 5,892,509. LGE alleges that Defendants infringe these patents. The motions now pending before the Court all involve one issue: whether, and to what extent, Defendants' purchase of

microprocessors and chipsets from Intel, a licensee of LGE, is a defense to LGE's charges of patent infringement.

All Defendants purchase microprocessors and chipsets from Intel or its authorized distributors and install these microprocessors and chipsets into computers that they manufacture.[1] LGE alleges that the computers that incorporate these microprocessors and chipsets infringe its patents. The microprocessors and chipsets are covered by the terms of a licensing agreement that LGE entered into with Intel on September 7, 2000. The LGE-Intel License gives Intel the right to manufacture products that would otherwise infringe any of the patents owned by LGE, including the patents at issue here. The LGE-Intel License expressly disclaims any implied license to Intel customers who combine products covered by the LGE-Intel License with non-Intel products. Defendants were informed of this limitation on the LGE-Intel License when, several days prior to entering into the LGE-Intel License, Intel sent a letter to all its customers, including Defendants, informing them that its license with LGE "does not extend, expressly or by implication to any product that you may make by combining an Intel product with any non-Intel product."

In May, 2002, Asustek and Quanta moved for summary adjudication, contending *inter alia* that under these circumstances LGE's patent rights were exhausted by its licensee Intel's sale of microprocessors and chipsets to Defendants. LGE responded that the sale of the microprocessors and chipsets to Defendants did not exhaust its patent rights because the sale of such unpatented components is not sufficient to exhaust the patentee's patent rights. In its August 20, 2002 Order, the Court rejected LGE's contention that the sale of unpatented components cannot exhaust the patentee's patent rights.

---

[1] To the extent that Defendants manufacture products using non-Intel microprocessors and chipsets, those products are not at issue in this motion.

The Court relied on *United States v. Univis Lens Co.*, 316 U.S. 241, 250-51, 62 S.Ct. 1088, 86 L.Ed. 1408 (1942), in which the United States Supreme Court held that:

> where one has sold an uncompleted article which, because it embodies essential features of his patented invention, is within the protection of his patent, and has destined the article to be finished by the purchaser in conformity to the patent, he has sold his invention so far as it is or may be embodied in that particular article.

The Court concluded that LGE's licensee's sale of the unpatented microprocessors and chipsets did in fact exhaust LGE's patent rights because those microprocessors and chipsets were "destined ... to be finished by the purchaser in conformity with the patent" because they have no reasonable non-infringing use. Therefore, the Court granted Asustek and Quanta's motions for summary adjudication on the basis that the patent exhaustion doctrine precluded LGE from recovering damages from Asustek and Quanta for the allegedly infringing devices that incorporate microprocessors and chipsets purchased from Intel.

FIC and Compal now move for summary adjudication of their claim that the patent exhaustion doctrine also precludes LGE from recovering damages from them. LGE opposes the motion. In doing so, LGE now contends for the first time that, even if the sale of unpatented components can exhaust the patentee's patent rights, Intel's sale of microprocessors and chipsets to Defendants did not do so here because that sale was not unconditional as required by the patent exhaustion doctrine. LGE also contends for the first time that the patent exhaustion doctrine cannot provide a defense for purchases made prior to the effective date of the LGE-Intel license and that the patent exhaustion doctrine does not prevent Defendants from being liable for infringement of its method patents. Because these issues are relevant to the patent exhaustion defense raised by all

of the Defendants, the Court deemed LGE's submissions to be a request for reconsideration. The Court now resolves these issues with respect to all Defendants.

LEGAL STANDARD

Summary judgment is properly granted when no genuine and disputed issues of material fact remain, and when, viewing the evidence most favorably to the non-moving party, the movant is clearly entitled to prevail as a matter of law. Fed. R. Civ. Proc. 56; *Celotex Corp. v. Catrett*, 477 U.S. 317, 322-23, 106 S.Ct. 2548, 91 L.Ed.2d 265 (1986); *Eisenberg v. Ins. Co. of N. Am.*, 815 F.2d 1285, 1288-89 (9th Cir.1987).

Material facts which would preclude entry of summary judgment are those which, under applicable substantive law, may affect the outcome of the case. The substantive law will identify which facts are material. *Anderson v. Liberty Lobby, Inc.*, 477 U.S. 242, 248, 106 S.Ct. 2505, 91 L.Ed.2d 202 (1986).

The moving party bears the burden of showing that there is no material factual dispute. Therefore, the Court must regard as true the opposing party's evidence, if supported by affidavits or other evidentiary material. *Celotex*, 477 U.S. at 324, 106 S.Ct. 2548; *Eisenberg*, 815 F.2d at 1289. The Court must draw all reasonable inferences in favor of the party against whom summary judgment is sought. *Matsushita Elec. Indus. Co. v. Zenith Radio Corp.*, 475 U.S. 574, 587, 106 S.Ct. 1348, 89 L.Ed.2d 538 (1986); *Intel Corp. v. Hartford Accident & Indem. Co.*, 952 F.2d 1551, 1558 (9th Cir.1991).

Where the moving party does not bear the burden of proof on an issue at trial, the moving party may discharge its burden of showing that no genuine issue of material fact remains by demonstrating that "there is an absence of evidence to support the nonmoving party's case." *Celotex*, 477 U.S. at 325, 106 S.Ct. 2548. The moving party is not required to produce evidence showing the absence of a

material fact on such issues, nor must the moving party support its motion with evidence negating the non-moving party's claim. *Id.; see also Lujan v. Nat'l Wildlife Fed'n*, 497 U.S. 871, 885, 110 S.Ct. 3177, 111 L.Ed.2d 695 (1990); *Bhan v. NME Hosps., Inc.*, 929 F.2d 1404, 1409 (9th Cir.1991), *cert. denied*, 502 U.S. 994, 112 S.Ct. 617, 116 L.Ed.2d 639 (1991). If the moving party shows an absence of evidence to support the non-moving party's case, the burden then shifts to the opposing party to produce "specific evidence, through affidavits or admissible discovery material, to show that the dispute exists." *Bhan*, 929 F.2d at 1409. A complete failure of proof concerning an essential element of the non-moving party's case necessarily renders all other facts immaterial. *Celotex*, 477 U.S. at 323, 106 S.Ct. 2548.

Where the moving party bears the burden of proof on an issue at trial, it must, in order to discharge its burden of showing that no genuine issue of material fact remains, make a *prima facie* showing in support of its position on that issue. *See UA Local 343 v. Nor-Cal Plumbing, Inc.*, 48 F.3d 1465, 1471 (9th Cir.1994). That is, the moving party must present evidence that, if uncontroverted at trial, would entitle it to prevail on that issue. *See id.; see also Int'l Shortstop, Inc. v. Rally's, Inc.*, 939 F.2d 1257, 1264-65 (5th Cir.1991). Once it has done so, the non-moving party must set forth specific facts controverting the moving party's *prima facie* case. *See UA Local 343*, 48 F.3d at 1471. The non-moving party's "burden of contradicting [the moving party's] evidence is not negligible." *Id.* This standard does not change merely because resolution of the relevant issue is "highly fact specific." *See id.*

DISCUSSION

I. LGE's Patent Rights Were Exhausted by its Licensee's Unconditional Sale of Essential Components to Defendants

LGE argues that the patent exhaustion doctrine does not protect Defendants from liability for patent

infringement because the predicate requirement of an unconditional sale is not met here. According to LGE, Intel's sale of microprocessors and chipsets to Defendants was not unconditional, in that Defendants were expressly informed that their purchase of components from Intel did not grant them a license to infringe LGE's patents by combining those components with other non-Intel parts. LGE is correct that the patent exhaustion doctrine requires an unconditional sale. *B. Braun Medical, Inc. v. Abbott Lab.*, 124 F.3d 1419, 1426 (Fed.Cir.1997) ("[It is] an unconditional sale of a patented device [or its essential components that] exhausts the patentee's right to control the purchaser's use of the device thereafter."). Further, LGE is correct that it is entitled to impose conditions on the sale of its patented products or the essential components of its patented products, if it chooses. *Mallinckrodt, Inc. v. Medipart, Inc.*, 976 F.2d 700, 706-08 (Fed.Cir.1992) (holding that the patent exhaustion doctrine is only applicable if there is an unconditional sale and that "private parties retain the freedom to contract concerning conditions of sale"). Nor is there any support in the case law for Defendants' contention that a patentee may not impose more onerous conditions on someone who purchases the patented device from a licensee than on the licensee.

However, the mere fact that LGE is entitled to impose conditions on the sale of the essential components of its patented products does not mean that it actually did so here. To the contrary, Defendants' purchase of the microprocessors and chipsets from Intel was unconditional, in that Defendants' purchase of microprocessors and chipsets from Intel was in no way conditioned on their agreement not to combine the Intel microprocessors and chipsets with other non-Intel parts and then sell the resultant products. *Cf. Mallinckrodt, Inc.*, 976 F.2d at 709 (holding that conditional sales of patented devices are not per se illegal but remanding to the district court to determine if the sales at issue were actually conditional). Nor does the fact that Intel informed its customers that its

license with LGE "does not extend, expressly or by implication to any product that [they] may make by combining an Intel product with any non-Intel product" render conditional the sales from Intel to Defendants. As will be discussed in greater detail below, this letter is sufficient to negate the implication of a license to practice the LGE patent that might otherwise arise because Defendants purchased essential components of LGE's patented devices from a licensed source of those components. However, this letter is not sufficient to transform what would otherwise be the unconditional sale of the microprocessors and chipsets into a conditional one. This letter from Intel to its customers does not demonstrate that Defendants agreed as a condition of sale not to combine the microprocessors and chipsets purchased from Intel with non-Intel parts and not to sell the resultant products. Therefore, LGE's licensee's unconditional sale of the essential components of the patented devices to Defendants exhausted LGE's patent rights.

II. LGE's Claims Against Defendants Based on Purchases Made Prior to the Effective Date of the LGE-Intel License Are Barred by the Terms of the License

LGE argues that the patent exhaustion doctrine does not preclude it from pursuing claims with respect to products that incorporate microprocessors and chipsets purchased from Intel prior to the effective date of the LGE-Intel License. LGE reaches this conclusion by reasoning that the patent exhaustion doctrine only applies to sales made by the patentee or its authorized licensees and that Intel was not such an authorized licensee until the effective date of the LGE-Intel License.[2] However, in making this

---

[2] LGE also claims support for this position in the Court's August 20, 2002 Order. However, while LGE is correct that the Court stated that its holding was limited to microprocessors and chipsets covered by the LGE-Intel License, the Court did not address the issue of whether

argument, LGE ignores the terms of the LGE-Intel License. According to the terms of the License, LGE released Intel and its customers from liability for any claim of patent infringement that arose prior to the effective date of the agreement to the extent that such claims would be precluded by the terms of the agreement after its effective date. After the effective date of the agreement, Intel is released from liability for infringement because it is a licensee and its customers, including Defendants here, are released from liability for infringement because they are purchasers from a licensee. Therefore, by the very terms of the agreement, Defendants cannot be liable for patent infringement for purchases made prior to the effective date of the agreement.

III. Neither the Patent Exhaustion Doctrine nor the Implied License Doctrine Precludes LGE from Pursuing its Method Claims

LGE argues that the patent exhaustion doctrine does not preclude it from alleging infringement of its method claims. In this, LGE is correct, as the Court stated in its August 20 Order. August 20 Order at 18-20 (noting that *Bandag, Inc. v. Al Bolser's Tire Stores, Inc.*, 750 F.2d 903 (Fed.Cir.1984) and *Glass Equip. Dev., Inc. v. Besten, Inc.*, 174 F.3d 1337 (Fed.Cir.1999) hold that the sale of a device cannot exhaust the patentee's rights under a separate patent teaching a method of accomplishing a specific function).

Therefore, the Court must address the issue reserved in the August 20 Order, namely whether Defendants acquired an implied license to practice the claimed invention. To prevail on an implied license defense, the alleged infringer must show both that the device sold by the patentee has no reasonable, non-infringing use, and that "the circumstances plainly indicate that the grant of a license should be

---

microprocessors and chipsets purchased before the effective date of the License are so covered because that issue was not before the Court.

inferred." *Bandag*, 750 F.2d at 925; *Met-Coil Sys. Corp. v. Korners Unlimited*, 803 F.2d 684, 686 (Fed.Cir.1986). This second requirement will be met if the patentee's actions lead the alleged infringer to believe that it has a license to use the invention and, in reliance on those actions, the alleged infringer practices the patent.

Here, the circumstances do not plainly indicate that a license was implied, because Intel expressly disclaimed the existence of such a license. Specifically, the record shows that Intel sent letters to Defendants in September, 2000 notifying them of the LGE-Intel License and informing them that "while this patent license that LGE granted to Intel covers Intel's products, it does not extend, expressly or by implication, to any product that you may make by combining an Intel product with any non-Intel product." Therefore, after they received this notice, Defendants cannot claim an implied license to practice any of LGE's method claims and patents.

CONCLUSION

With these clarifications, the Court reaffirms its Order of August 20, 2002, granting Defendants Asustek and Quanta's motion for summary adjudication of their claim that the patent exhaustion doctrine precludes them from being liable for infringement of LGE's device patents. With that Order and this Order, the Court also grants Defendants FIC and Compal's motion for summary adjudication of the same defense. Finally, the Court grants LGE's motion for summary adjudication of its claim that neither the patent exhaustion doctrine nor the implied license doctrine provides Defendants with a defense to LGE's claim that they infringed LGE's method patents.

IT IS SO ORDERED.

UNITED STATES DISTRICT COURT FOR THE NORTHERN DISTRICT OF CALIFORNIA

LG ELECTRONICS, INC., Plaintiff and Counterclaim Defendant

v.

BIZCOM ELECTRONICS, INC., COMPAL ELECTRONICS, INC., and SCEPTRE TECHNOLOGIES, INC., EVEREX SYSTEMS, INC., FIRST INTERNATIONAL COMPUTER, and FIRST INTERNATIONAL COMPUTER OF AMERICA, INC., Q-LITY COMPUTER, INC., QUANTA COMPUTER, INC., and QUANTA COMPUTER USA, INC., Defendants and Counterclaimants.

No. C 01-1375 CW, C 01-1594 CW, C 01-2187 CW, C 01-1552 CW

2004 U.S. Dist. LEXIS 29906

November 30, 2004, Decided
November 30, 2004, Filed

JUDGES: CLAUDIA WILKEN, United States District Judge.

OPINION BY: CLAUDIA WILKEN

ORDER ADDRESSING CROSS MOTIONS FOR SUMMARY JUDGMENT AND GRANTING DEFENDANTS' MOTION TO AMEND

Plaintiff and Counter-Defendant LG Electronics, Inc., (LGE) moves for summary judgment based on judicial estoppel that Defendants' Intel-based products infringe the

asserted method claims of U.S. Patent Nos. 5,077,733 ('733 patent), 4,918,645 ('645 patent), and 5,379,379 ('379 patent). Defendants Asustek Computer, Inc., and Asus Computer International, Inc. (Asustek);[1] Bizcom Electronics, Inc., Compal Electronics, Inc. and Sceptre Technologies, Inc. (Compal); First International Computer, Inc. and First International Computer of America, Inc. (FIC); Q-Lity Computer, Inc., Quanta Computer, Inc. and Quanta Computer USA, Inc. (Quanta); and Everex Systems, Inc. (Everex) oppose the motion, and cross-move for summary adjudication of non-infringement of the '733, '645 and '379 patents and non-infringement, invalidity and unenforceability of U.S. Patent No. 5,892,509 ('509 patent). Defendants further move for summary adjudication that LGE's claims for relief related to the '509 patent should be dismissed because Defendants are licensed or protected by license under the '509 patent.[2] LGE opposes these motions.

Defendants also move for summary adjudication that their sales to Hewlett Packard (HP) and its subsidiaries are licensed or protected by license under the '733, '379, and '645

---

[1] The Court has since dismissed Plaintiff's claims against the Asustek Defendants on a stipulation by the parties.

[2] Defendants move to exclude the Expert Report of Dr. William R. Huber and the Supplemental Expert Report of Mr. Richard Goodin. The Court denies Defendants' motion with respect to the Huber Expert Report, but grants the motion with respect to the Goodin Supplemental Report, in light of LGE's previous representation to the Court, in opposing Defendants' request to adjust the deadline schedule, that it would timely file all expert reports.

Defendants also object to certain evidence submitted by LGE in support of its opposition to Defendants' motions for summary judgment. To the extent that the Court relies upon evidence to which there is an evidentiary objection, Defendants' objections are overruled. To the extent that the Court does not rely on such evidence, Defendants' objections are overruled as moot. LGE moves to strike Defendants' objections to evidence as impermissible extensions of the page limit for briefs. The Court denies LGE's motion to strike.

patents. LGE does not oppose this motion, and the Court accordingly grants it.

Defendants also move for reconsideration of the Court's April 21, 2003 Order Denying Motion to Amend Defendants' Final Invalidity Contentions and its October 22, 2003 Order Denying Motion to Amend Defendants' Answers and Counterclaims. Defendants seek to amend their answers, counterclaims, and final invalidity contentions to include additional evidence regarding allegedly invalidating prior art and unenforceability.[3] LGE opposes this motion.

The motions were heard on September 3, 2004. Having considered all of the papers filed by the parties and oral argument on the motions, the Court denies LGE's motion for summary adjudication of infringement of the '645, '733, and '379 patents. The Court grants Defendants' motions for summary adjudication of non-infringement of the '733, '645, and '379 patents, and grants Defendants' motion for summary adjudication that LGE's infringement claims under the '509 patent are barred by the non-assertion provisions of the LGE-Microsoft Agreement. However, the Court denies Defendants' motion for summary adjudication of invalidity and unenforceability of the '509 patent. In light of its finding of non-infringement, the Court denies as moot Defendants' motion for reconsideration.

BACKGROUND

Defendants in this case purchase microprocessors and chipsets from Intel or its authorized distributors and install them into computers that they manufacture.[4] Intel's production of the microprocessors and chipsets are covered by a License Agreement between LGE and Intel. LGE

---

[3] Defendants represented at the hearing that they would move to dismiss their invalidity counterclaims if they were found not to infringe LGE's patents.

[4] To the extent that Defendants manufacture products using non-Intel microprocessors and chipsets, those products are not at issue in this Order.

contends that Defendants' incorporation of these microprocessors and chipsets into their computers infringes LGE's patents.

The patents-in-suit are diverse.[5] Both the '645 and the '379 patents relate to computer memory access and management. The '733 patent discloses a system that permits multiple computer devices alternating access to a system bus, and the '509 patent discloses a system that allows remote access to shared memory in a computer system.

The Court has addressed the LGE-Intel License in two previous orders. In its August 20, 2002 Order, the Court ruled that LGE's infringement claims were barred by the patent exhaustion doctrine to the extent the alleged infringement is based upon the authorized use of a licensed Intel component for its intended and sole purpose. In its February 6, 2003 Order, the Court reaffirmed and clarified its previous ruling, finding that the patent exhaustion doctrine protects Defendants from liability for infringement of LGE's apparatus and device claims, but that neither the patent exhaustion doctrine nor the implied license doctrine provide Defendants with a defense to LGE's claim that they infringe LGE's method patents. All of the asserted claims remaining in the case are method claims.

LEGAL STANDARD

Summary judgment is properly granted when no genuine and disputed issues of material fact remain, and when, viewing the evidence most favorably to the non-moving party, the movant is clearly entitled to prevail as a matter of law. Fed. R. Civ. Proc. 56; *Celotex Corp. v. Catrett*, 477 U.S. 317, 322-23, 106 S. Ct. 2548, 91 L. Ed. 2d 265 (1986); *Eisenberg v. Ins. Co. of N. Am.*, 815 F.2d 1285, 1288-89 (9th Cir. 1987).

---

[5] The Court discussed LGE's patents in more detail in its August 20, 2002 Claim Construction Order.

Material facts which would preclude entry of summary judgment are those which, under applicable substantive law, may affect the outcome of the case. The substantive law will identify which facts are material. *Anderson v. Liberty Lobby, Inc.*, 477 U.S. 242, 248, 106 S. Ct. 2505, 91 L. Ed. 2d 202 (1986).

The moving party bears the burden of showing that there is no material factual dispute. Therefore, the Court must regard as true the opposing party's evidence, if supported by affidavits or other evidentiary material. *Celotex*, 477 U.S. at 324; *Eisenberg*, 815 F.2d at 1289. The Court must draw all reasonable inferences in favor of the party against whom summary judgment is sought. *Matsushita Elec. Indus. Co. v. Zenith Radio Corp.*, 475 U.S. 574, 587, 106 S. Ct. 1348, 89 L. Ed. 2d 538 (1986); *Intel Corp. v. Hartford Accident & Indem. Co.*, 952 F.2d 1551, 1558 (9th Cir. 1991).

Where the moving party does not bear the burden of proof on an issue at trial, the moving party may discharge its burden of showing that no genuine issue of material fact remains by demonstrating that "there is an absence of evidence to support the nonmoving party's case." *Celotex*, 477 U.S. at 325. The moving party is not required to produce evidence showing the absence of a material fact on such issues, nor must the moving party support its motion with evidence negating the non-moving party's claim. *Id.*; *see also Lujan v. Nat'l Wildlife Fed'n*, 497 U.S. 871, 885, 110 S. Ct. 3177, 111 L. Ed. 2d 695 (1990); *Bhan v. NME Hosp., Inc.*, 929 F.2d 1404, 1409 (9th Cir. 1991), *cert. denied*, 502 U.S. 994, 112 S. Ct. 617, 116 L. Ed. 2d 639 (1991). If the moving party shows an absence of evidence to support the non-moving party's case, the burden then shifts to the opposing party to produce "specific evidence, through affidavits or admissible discovery material, to show that the dispute exists." *Bhan*, 929 F.2d at 1409. A complete failure of proof concerning an essential element of the non-moving

party's case necessarily renders all other facts immaterial. *Celotex*, 477 U.S. at 323.

Where the moving party bears the burden of proof on an issue at trial, it must, in order to discharge its burden of showing that no genuine issue of material fact remains, make a prima facie showing in support of its position on that issue. *See UA Local 343 v. Nor-Cal Plumbing, Inc.*, 48 F.3d 1465, 1471 (9th Cir. 1994). That is, the moving party must present evidence that, if uncontroverted at trial, would entitle it to prevail on that issue. *See id.*; *see also Int'l Shortstop, Inc. v. Rally's, Inc.*, 939 F.2d 1257, 1264-65 (5th Cir. 1991). Once it has done so, the non-moving party must set forth specific facts controverting the moving party's prima facie case. *See UA Local 343*, 48 F.3d at 1471. The non-moving party's "burden of contradicting [the moving party's] evidence is not negligible." *Id.* This standard does not change merely because resolution of the relevant issue is "highly fact specific." *See id.*

DISCUSSION

I. Judicial Estoppel

LGE argues that it is entitled to summary judgment on all of its remaining infringement claims because Defendants are judicially estopped from asserting non-infringement. More specifically, LGE asserts that, in arguing that the patent exhaustion doctrine bars LGE's infringement claims, Defendants necessarily had to, and did, argue that there were no non-infringing uses of the accused devices. LGE argues that it would be inconsistent for Defendants to now argue that their use of Intel chipsets and microprocessors does not infringe. LGE's argument misconstrues the past proceedings in this case.

In its Patent Local Rule 3-1 Supplemental Disclosure, LGE alleged inter alia that Defendants' incorporation and use of certain Intel chipsets in Defendants' accused products necessarily caused these products to infringe LGE's asserted patents. In response to this allegation, Defendants

filed a motion for summary judgment, contending that to the extent that LGE was correct that Defendants' incorporation and use of certain Intel chipsets in Defendants' accused products caused Defendants' products to infringe, LGE's claims were barred by the patent exhaustion doctrine. In so moving, Defendants never conceded, and expressly reserved their right to contest, that use of the Intel chipsets caused Defendants to infringe. Instead, Defendants argued that even if the accused devices infringe the asserted claims, the patent exhaustion doctrine precludes them from being held liable for such infringement. The Court accepted Defendants' argument with respect to the asserted apparatus claims, but rejected it with respect to the asserted method claims.

However, nothing in either the Court's August 20, 2002 or February 6, 2003 Orders can be read as holding that Defendants did indeed infringe either the asserted apparatus or method claims. The Court merely held that if Defendants' incorporation and use of certain Intel chipsets caused their accused devices to infringe the patents-in-suit, the patent exhaustion doctrine protects Defendants from liability for any such infringement of the apparatus claims of the asserted patents. Defendants are free to argue that, contrary to LG's assertion, their incorporation and use of the Intel chipsets does not cause the accused devices to infringe the remaining method claims of the patents-in-suit.

For these reasons, the Court denies LGE's motion for summary adjudication of infringement of the '645, '733, and '379 patents.

II. '733 Patent

Defendants seek summary judgment of non-infringement of the asserted claims of the '733 patent. LGE opposes this motion.

The '733 patent discloses a rotating priority system that permits multiple computer devices alternating access to a system bus, i.e. the pathway over which the various

components of a computer system transmit data. *See, e.g.*, '733 patent claim 15 (claiming a "method for determining priority of access to a bus among a set of devices coupled to the bus"). Such a rotating priority scheme addresses the problem of "hogging," in which one frequently used component of a computer system monopolizes the system bus. *See* '733 patent, col. 1 ln. 49-58 (asserting that many prior art devices failed to prevent bus hogging). So long as the frequently used component is transmitting data, it can prevent other system components from carrying out necessary functions that require the transmission of data. The asserted claims of the '733 patent accomplish this by "counting a number of accesses by the device to the bus" and then "in response to predetermined number of accesses to the bus, giving another [device] the highest priority." '733 patent, claim 15.[6] A component remains the "anchor node" (i.e. the highest priority) until a counter reaches a preset number.

Defendants argue inter alia that none of the accused devices "count ... a number of accesses by the device to the bus" as required by the asserted claims. According to Defendants, the accused devices contain master latency timers, which count clock cycles, or time, not accesses, in order to control a device's tenure over the bus. Defendants assert that counting clock cycles is not the same as counting accesses. The Court already recognized as much in construing the claim limitation "counting a number of accesses by the device to the bus" to mean "counting the number of times a device gains use of the bus." Claim Construction Order at 41.

LGE does not dispute Defendants' factual assertion that the master latency timers in the accused devices count clock signals, but contends that the accused devices nevertheless practice the claim limitation at issue. See LGE's Opp. to

---

[6] Claim 15 is the only asserted independent claim. Asserted claims 16-19 are dependent claims of claim 15.

Defs.' Summ. J. Mot at 8:18-22 (arguing that because the master latency timer increments by passage of clock signals and does so after a device gains ownership of the bus, the timer therefore counts the number of accesses). In support of this contention, LGE appears to continue to argue that counting clock signals is the same as counting accesses. However, in its Claim Construction Order, the Court considered and rejected this argument. More specifically, the Court noted that LGE proposed to construe the claim limitation of "counting a number of accesses by the device to the bus" to mean "counting a number of clock signals, each clock signal indicating that an access by the device to the bus has occurred." Claim Construction Order at 39. The Court rejected this proposed construction in favor of that advanced by Defendants, namely "counting the number of times a device gains use of the bus." *Id.* at 41. This is so even if the counter increments in a manner responsive to clock signals, as in the preferred embodiment, programmable node grant counter (NGCNT) 720(1). *Id.* at 40. Thus, LGE cannot establish that the accused devices infringe without establishing that the accused devices count the number of accesses to the bus.

LGE also makes the narrower assertion that the accused devices practice the claim limitation at issue, in that the master latency timers only increment when there has been an access to the bus, despite their reliance upon clock signals to determine the number of times that the bus has been accessed. This contention is consistent with the Court's claim construction, which held that the claim limitation required the counting of accesses to the bus, but did not address how the number of accesses must be counted. However, LGE has offered no evidentiary support for the position that the master latency devices increment when and only when there has been an access to the bus, and Defendants have offered evidence that the master latency timers will continue to increment even when there has not been a new access to the bus. *See* Horst Expert Rep. at 11-16. Because LGE has offered no evidence that the

accused devices count the number of accesses to the bus, the Court grants Defendants' motion for summary judgment of non-infringement of the '733 patent.

III. '645 Patent

The '645 patent discloses a technique for high-speed retrieval and transfer of large amounts of data over a system bus through a process called "page mode memory access." Page mode memory access teaches assertion of an entire row of data followed by the assertion and deassertion of multiple column addresses. According to the patent's method, a requesting agent and a replying agent communicate over the system bus. '645 patent at 10:17-23. A "plurality of memory address control signals" are used to respond over the bus to requests for accessing the memory. *Id.* at 10:29-33. The patent specifies that these control signals are comprised of row address strobe signals and column address strobe signals. *Id.* at 10:33-36. A strobe signal is a signal set by an agent on the bus at the time that the data is ready to be read. Thus, a strobe signal is set in response to particular conditions, rather than at regular intervals. A strobe signal differs from a clock signal, which can also be used to time access to memory, because a clock signal is a signal set at regular intervals by the system clock.

Defendants argue that the accused SDRAM devices do not infringe asserted claims 1 and 12 because the accused devices do not use the claimed strobe signals. LGE disputes this position, contending that (1) the accused SDRAMs use strobe signals for communications inside the chip and (2) the clock signals used by the accused SDRAMs for communications between the system bus and the SDRAM chip function as strobe signals under certain conditions. LGE's first contention is insufficient as a basis for an infringement claim because both of the asserted claims require that a system bus be involved in the communication at issue, and there is no system bus inside the SDRAM chip. Therefore, whether the accused SDRAM chips use strobe signals to access memory internally is irrelevant, because

they are not doing so over a system bus. LGE's second contention fails because a clock signal is simply not a strobe signal. A clock signal is set at regular intervals by the system clock; a strobe signal is set by another device on the bus in response to certain conditions. That a clock signal may happen to be set at the same time that a strobe signal would have been set is not sufficient to make a clock signal into the strobe signal required by the asserted claims. For these reasons, the Court grants Defendants' motion for summary judgment of non-infringement of the '645 patent.

IV. '379 Patent

Defendants seek summary judgment of non-infringement of the asserted claims of the '379 patent. LGE opposes Defendants' motion.[7]

The '379 patent presents a technique for transmitting simultaneous read and write requests in a manner that prevents the "reading" of data from main memory when that data is the subject of a pending write request. This ensures that a data read reflects the current state of the data. *See* '379 patent, col. 1 ln. 16-60. As the Court explained in its Claim Construction Order,

> A read request is a request from a device connected to a bus to read data from main memory. A write request is a request from a device connected to a bus to write data to main memory. The '379 patent teaches a way of controlling the order in which read and write requests to memory are executed. It discloses allowing read requests to proceed ahead of write requests unless doing so would result in "stale" data being returned from memory.

---

[7] LGE has narrowed its infringement allegations to accuse only those devices that incorporate the Solano ("815"), Whitney ("810"), Almador ("830"), or Montara ("855") Intel chipsets.

> In the '379 patent, read and write requests pass through a memory controller on their way to main memory. The memory controller includes read and write "buffers" which store read and write requests before transmitting them to main memory. The memory controller compares the targeted memory address of each incoming read request to the target addresses of all buffered write requests. A read address that does not have a match in the write buffer will not be performed. However, if the memory controller finds a match, it will perform the buffered write request first, then the corresponding read request to assure that the device does not read "stale" data from main memory.

Claim Construction Order 42-43. The asserted claim of the '379 patent discloses a method for accomplishing this goal that includes the steps of "buffering write requests" and "buffering read requests" as they are received from the system bus; "comparing when received each read address against buffered write addresses, if any, to determine if a received read address has an address value within a predetermined range of address values of a buffered write address;" and then, "if a received address is determined not to be within the predetermined range of addresses of any buffered write addresses," "first executing in sequence all buffered read requests; and then executing in sequence all buffered write requests;" or "else if a received address is determined to have an address value within the predetermined range of address values of any buffered write address," then "first executing in sequence all buffered read requests up to but not including the received read request which was determined to be within the predetermined range; then executing all buffered write requests; and then executing the buffered read request which was determined to be within the predetermined range." '379 patent claim 7.

Defendants argue inter alia that they do not literally infringe asserted claim 7 of the '379 patent. Defendants point to the testimony of LGE's expert, Dr. William K. Hoffman, in which he admitted that in certain circumstances the accused devices do not execute all buffered write requests prior to executing the pending read request as required by claim 7. Fox Decl. Exh. 20 (Hoffman Depo. 723:15-724:10, 726:15-727:1, 734:20-735:18, 738:21-739:21). LGE does not deny that Hoffman so testified, but asserts that Hoffman also testified that in other circumstances the accused devices do execute all buffered write requests prior to executing the pending read request as required by claim 7; and thus infringe.[8] *See* Hoffman Decl. PP 4-24.

LGE is correct that, as a general matter, an accused device that "sometimes, but not always, embodies a claimed method nonetheless infringes." *Bell Communications Research, Inc. v. Vitalink Communications Corp.*, 55 F.3d 615, 622 (Fed. Cir. 1995). Here, however, the accused devices, as described by LGE, cannot literally infringe because they never practice the claimed method. More specifically, the asserted claim describes a method for handling "each read address" received by the memory control unit in which the memory controller is required to respond to each received read address in one of two defined ways. '379 patent claim 7. Thus, the asserted claim delimits the universe of possible responses to "each" read address received, in the form of an "if a, then b but if x, then y" instruction. However, the accused devices, as described by LGE, respond to some of the read addresses received by the memory control unit by performing an action other than that which the asserted claim specifies must be performed. For this reason, the accused devices do not literally infringe.

---

[8] Because the Court finds that Defendants do not infringe the *'379 patent*, the Court need not address Defendants' objection that Hoffman's Declaration contradicted his earlier deposition testimony.

LGE contends, however, that even if the accused devices do not literally infringe, a jury could find that they infringe under the doctrine of equivalents, in that there is evidence from which a reasonable jury could find that the accused devices perform "substantially the same function in substantially the same way to achieve substantially the same result." *Graver Tank & Mfg. Co. v. Linde Air Prods Co.*, 339 U.S. 605, 608, 70 S. Ct. 854, 94 L. Ed. 1097, 1950 Dec. Comm'r Pat. 597 (1950). More specifically, LGE asserts that the asserted claim's requirement that all buffered write requests be executed prior to the execution of the pending read request is substantially met when the accused devices execute buffered write requests up to the one that matches an incoming read request. Hoffman Decl. PP 25-28. In other words, to continue the analogy, LGE is claiming that the accused devices infringe under the doctrine of equivalents because when x is met, the accused devices perform y', which is equivalent to y.

Defendants respond that the accused devices' behavior cannot be considered equivalent, because the accused devices' execution of "some" buffered write requests simply cannot be the equivalent of the asserted claim's requirement for how "all" buffered write requests should be executed. Courts have determined non-equivalence as a matter of law where a finding of equivalence would vitiate the terms of the claim. *See Ericsson, Inc. v. Harris Corp.*, 352 F.3d 1369, 1373-74 (Fed. Cir. 2003) (noting vitiation of claim requirement if device supplying "some" power when on-hook was equivalent to supplying power "only" when off-hook); *Moore U.S.A., Inc. v. Standard Register Co.*, 229 F.3d 1091, 1105-06 (Fed. Cir. 2000) (holding that a "majority" cannot be equivalent to "minority"). Here, the asserted claim discloses a method in which "each" read address is treated according to one of two alternative procedures that specify treatment of "all" buffered requests. Even accepting arguendo LGE's expert's opinion, the Court finds as a matter of law that there is no equivalence.

V. '509 Patent

A. Microsoft License Agreement Non-Assertion Provision

Defendants move for summary judgment with respect to the '509 patent inter alia on the basis that LGE is barred from asserting its claims under the '509 patent by a License Agreement between it and Microsoft. The '509 patent discloses a system that allows remote access to shared memory in a computer system. The '509 patent purports to allow multiple computer users in multiple locations to work simultaneously on the same computer document. LGE accuses computers that are shipped with Microsoft NetMeeting's Whiteboard application in conjunction with basic computer components such as a CPU and either a "power supply unit" (claim 45) or a "facsimile unit" (claim 51).

Defendants contend that LGE's claims are barred by the non-assertion provision of the Agreement, which provides that, "as partial consideration for the rights" granted to LGE under the Agreement, LGE "agrees not to (A) sue or (B) bring, prosecute, assist or participate in any judicial, administrative or other proceedings of any kind against MS [Microsoft], its Suppliers, their subsidiaries, or their licensees (including without limitation OEM customers and end users) for infringement of [LGE's] Patents." Fox Decl. Ex. 53, License Agreement at P 12(d)(i).

LGE responds that the non-assertion provision is inapplicable under the facts presented here because it applies only to infringement that occurs "on account of the manufacture, use, sale or distribution" of "any releases of the product(s) licensed to [LGE] under the License Agreement," *id.*, and Defendants' infringement is not "on account of" the Whiteboard software. More specifically, LGE contends that the alleged infringement cannot be "on account of" the Whiteboard software because the Whiteboard software does not practice all of the elements of the asserted claims, which also disclose use of either a

"power supply unit" (claim 45) or a "facsimile unit" (claim 51) and other basic components of personal computers (e.g., "a CPU"). However, as Defendants point out, it is undisputed that LGE only claims that Defendants' products infringe when they are running the Whiteboard software. Because there is no alleged infringement without the Whiteboard software, Whiteboard does not merely "play [a] role" in infringement. LGE's Opp. at 21. Infringement is clearly alleged "on account of" the Whiteboard software. This conclusion is further supported by the fact that, as LGE admits, all the other limitations at issue are common components of every personal computer.

LGE further responds by asserting that if the Agreement is as broad as this interpretation would have it, the Agreement is unenforceable on public policy grounds. Essentially, LGE claims that it would only have entered into such a broad agreement under the compulsion of Microsoft's monopoly power. However, LGE has not proffered sufficient evidence of this contention to support a finding that the Agreement is unenforceable on public policy grounds.

Finally, LGE contends that the Agreement does not bar its claims against the Quanta, Compel, and FIC Defendants, because they are not Microsoft "licensees (including without limitation OEM [original equipment manufacturer] customers and end users)." Agreement P 12(d)(i). These Defendants are undisputedly third party installers, who put together computers pursuant to agreements with OEM customers such as HP or Toshiba. However, LGE provides no rationale for finding the third-party installer Defendants, who are licensed to install Microsoft products for Microsoft consumers under valid agreements with OEM customers, not covered by the Agreement's non-assertion provision that protects all other producers and users of Whiteboard "without limitation." The Court therefore finds that LGE's infringement claims under the '509 patent are barred for the reasons above.

B. Validity

Defendants move for summary adjudication that the '509 *patent* is invalid because it violates 35 U.S.C. § 112's written description requirement, based on the alleged addition of new matter during prosecution and a failure of the specification to support newly added claims.

A patent and each of its claims are presumed to be valid, and the party asserting invalidity bears the burden of proving otherwise. 35 U.S.C. § 282. The Federal Circuit has held that patent invalidity must be demonstrated by clear and convincing evidence. *National Presto Indus. v. The West Bend Co.*, 76 F.3d 1185, 1189 (Fed. Cir. 1996); *American Hoist & Derrick Co. v. Sowa & Sons*, 725 F.2d 1350, 1360 (Fed. Cir. 1984). Defendants, therefore, have the burden to establish by clear and convincing evidence that the '509 patent is invalid.

First, Defendants argue that the '509 patent is invalid because the inventors added "new matter" during the patent's prosecution, in violation of 35 U.S.C. §§ 132 and 112. The written description requirement is satisfied if persons of ordinary skill in the art at the time the application was filed would recognize from the application that the inventor actually invented the full scope of the invention as finally claimed in the patent. *Chiron Corp. v. Genentech, Inc.*, 363 F.3d 1247, 1259 (Fed. Cir. 2004).

During the prosecution of the '509 patent, the inventors made a series of changes that resulted in the addition of Figure 5, including adding a "Communication Control Unit" structure (58A and 58B) preferably comprised of a CPU (62A and 62B) and a partitioned memory system (60A and 60B). *See* '509 patent Fig. 5 and 13:67-14:2. In contrast, the Original Application did not include Figure 5, and included only general references to a "Main CPU Unit" with "memory" divided using "partitioning" techniques. Klein Decl. P 8 and Ex. 4, Original Application. Defendants provide no evidence to dispute LGE's expert's assertion that one of ordinary skill in the art at the time would have

recognized that the Original Application already disclosed the "Communication Control Unit" as claimed in Figure 5. Klein Decl. P 10. Therefore, Defendants have not meet their burden to prove that the addition of Fig. 5 and the phrase "Communication Control Unit" constituted new matter in violation of 35 U.S.C. §§ 132 and 112.

LGE's expert's opinion is not incompatible with the Court's construction of the term "control unit for controlling the communication unit" to mean specifically "control unit 58A/58B ..." *See* August 20, 2002 Order at 58-59. Though the Court's construction requires that the control units must control communications and preferably be comprised of CPU and partitioned memory, according to LGE's expert all of these basic elements were contained in the Original Application as understood by one of ordinary skill in the art at the time.

Second, Defendants argue that the '509 patent is invalid because the addition of claims disclosing a workstation configuration with only one display impermissibly broadened the patent beyond the specification. It is true that the use of multiple displays on each image processing workstation is a significant purpose of the invention. *See, e.g.*, '509 patent at 3:34-36 (one objective of the invention "is to provide an overlay mode that enables overlays of any combination of images, graphics, or text"). Defendants point to Claim 4 as an example of such an unsupported claim. *See* '509 patent at 15:13-17 (disclosing an image processing system "wherein the first display displays a graphic image, and wherein the second display displays textual information"). However, Claim 4's disclosure of two displays with only one image of text is supported by other aspects of the invention, e.g., allowing users to communicate about or edit an image or text. Defendants provide no evidence to suggest that one skilled in the art would not recognize Claim 4 as supported by this and other alternative aspects of the specification. For these reasons, Defendants'

motion for summary judgment of invalidity of the '509 patent is denied.

CONCLUSION

For the foregoing reasons, the Court DENIES LGE's motion for summary adjudication of infringement of the '733, '645, and '379 patents (Docket No. 662 in Case 01-1375, No. 652 in 01-1594, No. 616 in 01-2187, and No. 572 in 01-01552). The Court GRANTS Defendants' motion for summary adjudication of non-infringement of the '733, '645, and '379 patents; GRANTS Defendants' motion for summary adjudication that the infringement claims under the '509 patent are barred; DENIES as moot Defendants' motion for summary adjudication of non-infringement of the '509 patent; DENIES Defendants' motion for summary adjudication of invalidity and unenforceability of the '509 patent; and GRANTS Defendants' unopposed motion for summary adjudication that Defendants' sales to HP and its subsidiaries are licensed or protected by license under the '733, '379, and '645 patents (Docket No. 694 in Case 01-1375, No. 684 in 01-1594, No. 649 in 01-2187, and No. 604 in 01-1552).

The Court DENIES Defendants' motion to exclude the Huber Expert Report but GRANTS Defendants' motion to exclude the Goodin Supplemental Expert Report (Docket No. 683 in Case 01-1375, No. 673 in 01-1594, No. 638 in 01-2187, and No. 593 in 1-1552). The Court DENIES LGE's motion to strike Defendants' objections to evidence (Docket No. 742-in Case 01-1375, No. 735 in 01-1594, No. 700 in 01-2187, and No. 655 in 1-1552).

The Court DENIES as moot Defendants' motion for reconsideration (Docket No. 769 in Case 01-1375, No. 760 in 01-1594, No. 724 in 01-2187, and No. 679 in 01-1552) and VACATES as moot Defendants' motion for summary judgment of invalidity of the '645 patent (Docket No. 818 in Case 01-1375, No. 807 in Case 01-1594, No. 772 in Case 01-2187, and No. 725 in Case 01-1552) and the hearing scheduled for December 3, 2004.

The Court instructs the parties to meet and confer in an attempt to reach an agreement on the terms of a stipulated dismissal of the remaining counterclaims. If the parties are unable to agree, Defendants shall file a motion to dismiss their remaining counterclaims within two weeks of the date of this Order. The parties shall also meet and confer in an attempt to identify the remaining issues in the case, if any, and a proposed schedule for resolving those issues. The parties shall file a joint report within two weeks of the date of this Order.

IT IS SO ORDERED.

Dated: November 30, 2004

CLAUDIA WILKEN
United States District Judge

UNITED STATES COURT OF APPEALS
FOR THE FEDERAL CIRCUIT

LG ELECTRONICS, INC.,
Plaintiff-Appellant,

v.

BIZCOM ELECTRONICS, INC., COMPAL ELECTRONICS, INC., and SCEPTRE TECHNOLOGIES, INC., Defendants-Cross Appellants, and EVEREX SYSTEMS, INC., Defendant-Appellee, and FIRST INTERNATIONAL COMPUTER INC. and FIRST INTERNATIONAL COMPUTER OF AMERICA, INC., Defendants-Cross Appellants, and Q-LITY COMPUTER, INC., QUANTA COMPUTER, INC., and QUANTA COMPUTER USA, INC.,
Defendants-Cross Appellants.

05-1261, 05-1262, 05-1263, 05-1264, 05-1302, 05-1303, 05-1304

2006 U.S. App. LEXIS 23211

September 1, 2006, Decided
September 1, 2006, Filed

ORDER

A combined petition for panel rehearing and for rehearing en banc having been filed by the Cross-Appellant,* and the petition for rehearing, having been referred to the panel that heard the appeal, and thereafter the petition for rehearing en banc having been referred to the circuit judges who are in regular active service,

---

* The petition was filed by all the Cross-Appellants.

UPON CONSIDERATION THEREOF, it is

ORDERED that the petition for panel rehearing be, and the same hereby is, DENIED and it is further

ORDERED that the petition for rehearing en banc be, and the same hereby is, DENIED.

The mandate of the court will issue on September 8, 2006.

FILED
MAR 9 - 2007
OFFICE OF THE CLERK
SUPREME COURT, U.S.

No. 06-937

IN THE

Supreme Court of the United States

QUANTA COMPUTER, INC., *et al.*,
Petitioners,

v.

LG ELECTRONICS, INC.,
Respondent.

On Petition for a Writ of Certiorari to the United States Court of Appeals for the Federal Circuit

BRIEF FOR RESPONDENT IN OPPOSITION

RICHARD G. TARANTO
Counsel of Record
FARR AND TARANTO
1220 19th Street, NW
Suite 800
Washington, DC 20036
(202) 775-0184

WILSON-EPES PRINTING CO., INC. – (202) 789-0096 – WASHINGTON, D. C. 20002

BEST AVAILABLE COPY

PARTIES TO THE PROCEEDING AND RULE 29.6 STATEMENT

The parties to the proceeding are listed at Pet. ii. Pursuant to this Court's Rule 29.6, petitioner LG Electronics, Inc., states that more that ten percent of its shares are owned by LG Corp.

TABLE OF CONTENTS

	Page
PARTIES TO THE PROCEEDING AND RULE 29.6 STATEMENT	i
TABLE OF AUTHORITIES	iv
STATEMENT	1
A. Background	2
B. Trial Court Proceedings	8
C. The Court of Appeals Decision	9
ARGUMENT	11
A. The Decision Below Is Interlocutory	12
B. The Decision Presents Neither Inter- Nor Intra-Circuit Conflicts Nor An Issue That Arises Frequently	12
C. The Decision Involves A Narrow Case-Specific Application, Having No Broad Importance, of a Legal Principle That Petitioners Have Accepted and That Is Settled Under This Court's Precedents	14
D. The Decision Is Correct	22
CONCLUSION	28

TABLE OF AUTHORITIES

CASES	Pages
Adams v. Burke, 84 U.S. 453 (1873)	22
Aro Mfg. Co. v. Convertible Top Replacement Co., 377 U.S. 476 (1964)	22, 24
B. Braun Med. Inc. v. Abbott Labs., 124 F.3d 1419 (Fed. Cir. 1997)	25
Birdsell v. Shaliol, 112 U.S. 485 (1884)	24
eBay Inc. v. MercExchange, LLC, 126 S. Ct. 1837 (2006)	14
Festo Corp. v. Shoketsu Kinzoku Kogyo Kabushiki Co., Ltd., 535 U.S. 722 (2002)	13
General Talking Pictures Corp. v. W. Elec. Co., 304 U.S. 175 (1938)	*passim*
Illinois Tool Works Inc. v. Independent Ink, Inc., 126 S. Ct. 1281 (2006)	20
KSR Int'l Co. v. Teleflex, Inc., No. 04-1350 (Sup. Ct.)	13
Keeler v. Standard Folding- Bed. Co., 157 U.S. 659 (1895)	20
Mallinckrodt, Inc. v. Medipart, Inc., 976 F.2d 700 (Fed. Cir. 1992)	15
Mastrobuono v. Shearson Lehman Hutton, Inc., 514 U.S. 52 (1995)	23
Mitchell v. Hawley, 83 U.S. 544 (1873)	*passim*
Motion Picture Patents Co. v. Universal Film Mfg. Co., 243 U.S. 502 (1917)	20, 21
Pfaff v. Wells Elecs., 525 U.S. 55 (1998)	13
SmithKline Beecham Corp. v. Apotex Corp., 439 F.3d 1312 (Fed. Cir. 2006)	27
United States v. Gen. Elec. Co., 272 U.S. 476 (1926)	18, 19, 20, 21
United States v. Masonite Corp., 316 U.S. 265 (1942)	10

TABLE OF AUTHORITIES—Continued

Pages

United States v. Univis Lens Co., 316 U.S. 241 (1942) 21, 22, 24, 27
Warner-Jenkinson Co. v. Hilton Davis Chem. Co., 520 U.S. 17 (1997) 13
Waterman v. McKenzie, 138 U.S. 252 (1891) 20

STATUTES AND OTHER AUTHORITIES

17 U.S.C. § 109 21
28 U.S.C. § 1295(a)(1), (3), (6) 13
35 U.S.C. § 154 ..... 3, 21, 24
35 U.S.C. § 271(a) 3, 23, 24
Kobak, *Contracting Around Exhaustion: Some Thoughts About the CAFC's* Mallinckrodt *Decision*, 75 J. Pat. & Trademark Off. Soc'y 550 (1993) 18
R. Stern, E. Gressman, S. Shapiro, & K. Geller, *Supreme Court Practice* (8th ed. 2002) 12
Stern, *The Unobserved Demise of the Exhaustion Doctrine in U.S. Patent Law*, 15 Eur. Intell. Prop. Rev. 460 (1993) 18
Symposium, 16 Fordham Intell. Prop. Media & Ent. L.J. 1025 (2006) 25

IN THE

Supreme Court of the United States

No. 06-937

QUANTA COMPUTER, INC., *et al.*,
Petitioners,

v.

LG ELECTRONICS, INC.,
Respondent.

On Petition for a Writ of Certiorari to the United States Court of Appeals for the Federal Circuit

BRIEF FOR RESPONDENT IN OPPOSITION

STATEMENT

Petitioners strain to make a broad doctrinal issue out of a narrow case-specific ruling. The district court, like petitioners themselves, accepted the governing legal principle—that a patentee *may* condition its manufacturer-licensee's sales and thereby preserve its patent rights against purchasers from the licensee-manufacturer. It concluded, however, that there was no sufficiently conditional sale in this case. The Federal Circuit, following the same legal principle, disagreed with the trial court's case-specific assessment of the terms of dealing in this case, and returned the case to the district court for trial (on five patents, including one not at issue in the Petition). That interlocutory ruling presents no issue warranting review.

The Federal Circuit's ruling presents no issue as to the governing legal principle—which has been settled in plain terms since *Mitchell v. Hawley*, 83 U.S. 544 (1873), as reaffirmed in *General Talking Pictures Corp. v. W. Elec. Co.*, 304 U.S. 175 (1938), and never undercut by any other authority. Petitioners, in the courts below and even in the Petition, have accepted the legal principle governing this case: that a patentee *may* restrict the patent-practicing authority to be conveyed through its manufacturer-licensee's sales to downstream customers. Despite its effort to obscure the issue by discussing situations indisputably not presented in this case (such as patentees' sales of their own products), the Petition positively stresses the distinction of the situation actually presented here, for which the governing legal principle is established and accepted. What remains, therefore, is a fact-specific disagreement about whether the particular transactions here were sufficiently conditional. That issue is not certworthy—among other reasons, it raises at most a mere drafting issue for private parties about how to exercise the license-restricting freedom the accepted legal principle recognizes. Moreover, the Federal Circuit ruling is correct. The petition therefore should be denied.

A. Background

This is a patent infringement case between large competitive businesses. LGE, which is part of the Korea-based LG family of companies that invent, make, and sell computers, mobile phones, and many other products, is asserting five patents on inventions that improved computers. The defendants, petitioners here, are substantial Taiwan-based companies that have collectively made and sold hundreds of millions of dollars worth of computers, some of which they supply to American sellers such as Dell or Hewlett-Packard. The suit alleges that those computers have been using LGE's patented technology—which is among the broad package of technologies that nonparty Intel licensed from LGE in a

cross-licensing arrangement. The "exhaustion" issue that petitioners present, based on purchases from Intel, applies to four of the five patents now in the case.

At the present stage of this case, the assumption—not yet tested at trial—is that the patents at issue define novel and non-obvious inventions. The assumption, too, is that petitioners have benefitted and are benefitting by building the patented features into the computer systems they build and sell. On those assumptions, LGE has the exclusivity rights (*e.g.*, to make, sell, import, or use those inventions) expressly granted by Congress, 35 U.S.C. § 154(a)(1), and petitioners are infringing, under 35 U.S.C. § 271(a), when they make, sell, import, or use those inventions "without authority."

Petitioners' "exhaustion" argument is, as it must be under § 271(a), that they have "authority." They say that they got it from Intel when they bought certain (nonpatented) Intel microprocessors and chipsets and used those parts in making their (patented) computer systems. Pet. App. 3a; *see* Petrs' Response to Questions, Dec. 4, 2002, at 2 ("The patent exhaustion doctrine is triggered by Intel's authorized sale of licensed products to Defendants pursuant to LGE's license to Intel.") This is, therefore, a case involving a sale of a product not by the patentee (LGE), but by the patentee's licensee-manufacturer (Intel). By virtue of its agreements with LGE, however, Intel did not have and could not give the patent-practicing authority to petitioners, who indeed were expressly told that they were not getting any such authority.

The arrangement between LGE and Intel consists of two simultaneously entered-into agreements—a Patent Cross License Agreement and a Master Agreement. Under those Agreements, LGE granted *Intel* (but pointedly not Intel's customers) authority to practice a large number of LGE patents (not limited to those at issue here), and Intel granted reciprocal authority to LGE. Although some Intel-made articles *are* covered by *some* LGE patents embraced by the Intel-

LGE Agreements, it is undisputed that the Intel articles at issue here (microprocessors and chipsets) are *not* covered by any of the asserted patents. Pet. App. 3a.

The Agreements with Intel take pains to address the very situation at issue: petitioners' combination of the Intel components with non-Intel components to practice LGE's patents. In express terms, and by requiring that Intel send notices to this effect to its customers (petitioners got such notices), the Agreements make clear that LGE and Intel were settling their relations between themselves, while denying to customers of Intel any grant of needed authority to practice these patents by combining Intel parts with non-Intel components—thus leaving Intel's customers separately to negotiate any authority they needed from LGE to practice the combination-claiming patents. The Master Agreement, and the (incorporated) Cross License Agreement and Notice to petitioners, unmistakably deny Intel any right to convey, and Intel customers any receipt of, authority to practice LGE's patents.[1]

In the Cross License Agreement, Intel and LGE granted each other licenses subject to various terms and conditions, one of which disclaimed the grant of authority to Intel's customers to combine Intel and non-Intel parts to infringe LGE's patents:

> § 3.8. *No Implied Licenses or Other Rights.* No other rights are granted hereunder, by implication, estoppel, statute or otherwise, except as expressly provided herein.

---

[1] Although the Agreements are generally under a Protective Order, Intel has recently authorized disclosure of limited portions of the Agreements: the specific quotations in the public version of the Petition, plus certain other sections. The Agreements in their entirety were confidential at the time of the Federal Circuit's ruling—which therefore contains only a brief account of their provisions. Even now, much of the Agreements, including portions concerning the "payments" involved, which are blacked out in the public version of the Petition (at 2, 3, 9), remain under the Protective Order.

> Specifically, . . . (b) no waiver, license or immunity is granted by either party hereto directly or by implication, estoppel or otherwise to any third party for the combination by a third party of Licensed Products of either party with items, components, or the like acquired (directly or indirectly) from sources other than a party hereto, or for the use, import, offer for sale or sale of such combination. Notwithstanding anything to the contrary contained *in this Agreement*, the parties agree that nothing *herein* shall in any way limit or alter the effect of patent exhaustion that would otherwise apply when a party hereto sells any of its Licensed Products.

CAFC JA3614 (emphases added).[2]

The Master Agreement addressed the denial of patent-practicing authority by LGE to Intel's customers, with express reference to petitioners and other computer manufacturers. CAFC JA3621-32. It laid out what LGE and Intel were trying to do in a series of recitals, and it declared the willingness to license to be subject to the terms and conditions of both the Master Agreement and Cross License Agreement.[3]

---

[2] Other now-public provisions of the Cross License Agreement, as well as of the Master Agreement, make both federal *and* New York law applicable to construction and performance of the Agreements and require the Agreements generally to be kept confidential, with defined exceptions. Cross-License §§ 6.7, 6.9 (CAFC JA3617, 3618); Master Agreement §§ 5, 23-25 (CAFC JA3622, 3627).

[3] "Whereas LGE is the owner of certain patents directed to computer systems, such as desktop, notebook, and server computers and to processors for computers;

"Whereas LGE has asserted patent infringement claims based on the computer systems patents it owns against computer system manufacturers;

"Whereas certain of the computer system manufacturers, which are purchasers and users of Intel processors and chipsets, have asserted that Intel is obligated as an indemnitor for the patent infringement claims by LGE;

The Cross License Agreement and the Notice that Intel was required to send to various named manufacturers, including petitioners, were deemed part of the Master Agreement (not vice versa), though the Cross License Agreement would survive a breach of the Master Agreement. § 1, CAFC JA3622. The Master Agreement, the Cross License Agreement, and Notice and other attachments were declared to embody the entire understanding of the parties. § 21, CAFC JA3627.

The Master Agreement states that "LGE and Intel intend and acknowledge that LGE's grant of a license to Intel for Integrated Circuits . . . shall not create any express or implied license under LGE's patents to computer system makers that combine Intel Integrated Circuits with other non-Intel components to manufacture motherboards, computer subsystems, and desktop, notebook and server computers." § 2, CAFC

"Whereas Intel desires to acquire a license and a release with respect to only Intel products made for or by Intel and not for the products that computer system manufacturers make by combining Intel processors and chipsets with non-Intel components and materials;

"Whereas LGE and Intel do not intend this Agreement or the Patent License . . . to give rise to implied license rights in computer system manufacturers under LGE's patents in the instance where the computer system manufacturers combine Intel processors and/or chipsets with non-Intel components to produce mother boards, computer subsystems, and computer systems, such as desktop, notebook, and server computers;

"Whereas LGE is willing to grant a license and a release under the Patent License . . . only for Intel branded products;

"Whereas Intel has patents and LGE desires to acquire a license and a release under such patents and Intel is willing to grant LGE a license and a release under Intel's patents subject to the terms and conditions of this Agreement and the Patent License . . . ; and

"Whereas LGE and Intel desire to enter into this Agreement and the Patent License . . . on the terms and conditions hereinafter set forth and to conclude a strategic relationship in business cooperation; . . . ." CAFC JA3621.

JA3622. And the Notice that Intel was required to send to identified customers said, in full:

> It has recently come to Intel's attention that LG Electronics (LGE) has contacted you and claimed that certain of your products infringe certain of LGE's patents. I am writing to notify you that Intel recently obtained a broad patent license from LGE. This patent license ensures that any Intel product that you purchase is licensed by LGE and thus does not infringe any patent held by LGE or any of LGE's subsidiaries.
>
> This patent license is consistent with Intel's policy of standing behind its products. *Please note however that while the patent license that LGE granted to Intel covers Intel's products, it does not extend, expressly or by implication, to any product that you may make by combining an Intel product with any non-Intel product.*
>
> If you have any questions or if you would like further clarification of the status of any particular Intel Product under the LGE patent license, please do not hesitate to contact me.

Attachment C, CAFC JA3632 (emphasis added). It is undisputed that petitioners received this Notice from Intel.

Nevertheless, petitioners contended in the district court that LGE had failed in its unmistakable effort to deny petitioners the authority they need to escape infringement—which includes the making or selling of patented inventions "without authority." 35 U.S.C. § 271(a). They argued that LGE had, by law, simply lost (exhausted) its patent rights in the combinations petitioners made by using the (non-infringing) parts they bought from Intel, even though petitioners were warned in clear terms that they were not getting authority to

practice LGE's patents and even though the parts they were buying were not patented by LGE.[4]

B. District Court Rulings

When certain petitioners first sought partial summary judgment, the district court found exhaustion for a subset of the patent claims. Pet. App. 26a-49a; *see id.* at 60a (district court later noting its initial reservation of issue of exhaustion as to method claims). When petitioners as a whole then sought to extend the exhaustion ruling, the district court recognized that "LGE is correct that it is entitled to impose conditions on the sale of its patented products or the essential components of its patented products, if it chooses." *Id.* at 58a. But the court concluded that, on the facts here, LGE had not adequately conditioned Intel's sale to petitioners. *Id.* at 58a-59a. On that basis, and finding no exhaustion of patent claims to *methods* (as opposed to apparatuses), *id.* at 60a-61a, the district court found exhaustion as to some of the asserted patent claims. *Id.* at 61a. The court so held even though it also ruled, twice, that the terms of the dealings between LGE, Intel, and Intel's customers—which included the express Notices to petitioners—negated any implication of authority

---

[4] Petitioners state in passing that some of them bought some Intel components before the LGE-Intel Agreements and Notice. Pet. 6. But any contention based on such pre-Notice purchases has been waived. Presumably recognizing the relative insignificance of any such early sales, petitioners below presented their exhaustion argument as an all-or-nothing proposition; they never contended that the Federal Circuit could or should find exhaustion as to pre-Notice sales even if it rejected exhaustion for the post-notice sales. Petitioners thus cannot make the argument here. In any event, the Federal Circuit ruling, reflecting petitioners' argument, expressly takes as its premise that the purchases at issue were made after the Notices. Pet. App. 2a, 4a-6a. It is not precedent for any other situation.

(license) for petitioners to practice these patents. *Id.* at 49a-50a, 60a-61a.[5]

C. Court of Appeals Ruling

On LGE's appeal, most petitioners did not dispute the district court's decision rejecting any implied license—which, in any event, the Federal Circuit affirmed in a ruling (*id.* at 4a) that the Petition does not challenge. On the only issue presented in the Petition, the Federal Circuit reversed the district court's holding that exhaustion precluded infringment despite the denial of any license. *Id.* at 4a-6a. Like the district court, the court of appeals accepted (what petitioners themselves accepted) that a restriction on the terms of sale may defeat exhaustion; but, unlike the district court, it concluded that the particular dealings between LGE, Intel, and petitioners in this case were sufficient to effect such a restriction.

The court's analysis was brief, reflecting the lack of dispute over the governing legal principle and the confidentiality of the Agreements in the Federal Circuit. The court noted that "[t]he patents asserted by LGE do not cover the products licensed to or sold by Intel; they cover those products when combined with additional components." *Id.* at 4a; *see also id.* at 5a ("Notably, [the Intel] sale involved a component of the asserted patented invention, not the entire patented system."). Relying on *Mitchell v. Hawley*, 83 U.S. at 547—which, with

---

[5] The district court went on to grant summary judgment of non-infringement of all the patents on other grounds. It rested that ruling on interpretations of the complicated computer-related terms of the patents, its view of what certain evidence at the summary-judgment stage showed, and its reading of a "non-assertion provision" in agreements between LGE and Microsoft (applicable to the patent for which exhaustion is not even asserted). *Id.* at 62a-81a; *see* CAFC JA1-63 (claim construction opinion). The Federal Circuit overturned many of those rulings, Pet. App. 6a-25a, which are not at issue here.

striking similarity to this case, enforced a patentee's restrictions on its manufacturer-licensee's ability to authorize the latter's customers to practice the patent at issue—the court of appeals explained that "[i]t is axiomatic that the patent exhaustion doctrine, commonly referred to as the first sale doctrine, is triggered by an unconditional sale." Pet. App. 4a-5a. The court noted that the district court, analyzing Intel's sale, had recognized the legal principle that LGE *could* impose conditions, but had concluded (on summary judgment) that LGE had not done so. *Id.* at 5a-6a. The court of appeals then "disagree[d]" with that case-specific ruling. *Id.* at 6a.[6]

The court pointed to the fact that "[t]he LGE-Intel license expressly disclaims granting a license allowing computer system manufacturers to combine Intel's licensed parts with other non-Intel components." *Id.* at 6a. "Moreover, this conditional agreement required Intel to notify its customers of the limited scope of the license, which it did." *Id.* Accordingly, "[a]lthough Intel was free to sell its microprocessors and chipsets, those sales were conditional, and Intel's customers were expressly prohibited from infringing LGE's combination patents," and "LGE's rights in asserting infringement of its system claims were not exhausted." *Id.* The court then concluded that exhaustion did not apply to LGE's *method* claims for the very same reason: "even if the exhaustion doctrine were applicable to method claims, it would not apply here because there was no unconditional sale." *Id.*

---

[6] The court of appeals stated the LGE-Intel license "constitutes a sale for exhaustion purposes," citing *United States v. Masonite Corp.*, 316 U.S. 265, 278 (1942). Pet. App. 5a. That statement, consistent with the cited passage from *Masonite*, means only that the license was the first part of the two-part process that characterizes *every* situation where, as here, the patentee licenses someone else to make and sell the actual article that (*if* the "first sale" or "exhaustion" doctrine applies) becomes free of patent claims. The sentence thus identifies this as a case of licensee sale, as distinguished from patentee sale, of the required sold article—a distinction the Petition features as critical.

The court added that, in any event, "the sale of a device does not exhaust a patentee's rights in its method claims." *Id.*[7]

Petitioners sought rehearing. They accepted the legal principle that a patentee could condition its manufacturer-licensee's sales (here not even of a patented article) and thus preserve its exclusivity rights, avoiding "exhaustion" of those rights. They merely argued that the LGE-Intel-petitioners dealings in this particular case did not involve "a conditional sale" (and challenged the court's one sentence about method claims). Reh'g Pet. 2.[8] No judge even called for a response, let alone voted for rehearing by the panel or by the full court.

The case was remanded for further discovery and trial, and pre-trial proceedings are now under way.

ARGUMENT

None of the grounds for certiorari is present in this case. The decision below is interlocutory. It creates no conflict with decisions by other circuits or within the Federal Circuit. It raises nothing like the kind of pervasively arising fundamental patent-law issue that has been involved in other patent

---

[7] With the sale held properly conditional, what petitioners paid Intel for was, at the least, the right to use the parts they purchased *once they got their own licenses*—and the price petitioners paid presumably reflected the limitation on what they were buying. Pet. App. 5a. Having so ruled, the court of appeals had no occasion to consider whether the parts petitioners bought from Intel had any commercially reasonable non-infringing use even without LGE's further authorization. At a minimum, petitioners, which are Taiwan-based companies that make computers for the world market, could have used the parts to make computers for sale outside the United States, which would not infringe U.S. patents.

[8] Petitioners presented three issues, arguing that "the panel's opinion was contrary to established precedent 1) in holding that the license agreement between [LGE] and [Intel] was a conditional sale; 2) in holding that the sale of Intel products to the Defendants was a conditional sale; and 3) in holding that patent exhaustion could never apply to method claims of a patent." Reh'g Pet. 2.

cases this Court has reviewed. Rather, the Federal Circuit's decision rests on a case-specific application of a legal principle that petitioners accepted below, that is settled under the precedents of this Court they now invoke, and that makes a particular case-specific result of no broad importance—because the accepted legal principle makes preserving patentees' rights in this situation simply a matter of private drafting. The Federal Circuit's application of the accepted and settled principle, moreover, is correct. The petition therefore should be denied.

A. The Decision Below Is Interlocutory

The interlocutory character of the ruling below, which generally counsels against certiorari (*see* R. Stern, E. Gressman, S. Shapiro, & K. Geller, *Supreme Court Practice* § 4.18 (8th ed. 2002)), is clear. This case has not been tried. The Federal Circuit ruling reversed certain summary judgment rulings and returned the case for further pretrial proceedings in preparation for trial. In fact, the now-scheduled trial must proceed regardless of this Petition, for one patent is unaffected by the exhaustion issue. Petitioners, in relying on the alleged breadth of LGE's patents and their effect on the computer makers, are necessarily suggesting that the validity and reach of LGE's patents are relevant to their exhaustion argument. Pet. 1, 3, 9. Whether the patents are valid and whether petitioners' computers infringe are precisely the issues that are now working their way to trial.

B. The Decision Presents Neither Inter- Nor Intra-Circuit Conflicts Nor An Issue That Arises Frequently

The Federal Circuit ruling creates no lower court conflicts or disarray. To begin with, it does not conflict with any decision of another court of appeals. Petitioners, almost in passing, cite a few older decisions of the Fifth, First, and Seventh Circuits from before the Federal Circuit was created

to centralize appellate review of patent cases (28 U.S.C. § 1295(a)(1), (3), (6)). *See* Pet. 25. Given the Federal Circuit's unique nationwide appellate jurisdiction, such decisions would not create a disparity of governing law in different areas of the country even if they conflicted in substance with the decision below. But in fact, they do not, as petitioners' express descriptions make plain. Petitioners' descriptions correctly characterize *all* three circuits' law as *allowing* patentees to restrict a manufacturer-licensee's sales: "restrictions on the right to sell imposed on manufacturing licensees were enforceable." Pet. 25. That is the legal principle the Federal Circuit invoked here. *See also* note 11, *infra*.

Nor has exhaustion doctrine generally, or the aspects at issue here, provoked significant doctrinal divisions within the Federal Circuit. *Compare, e.g., Warner-Jenkinson Co. v. Hilton Davis Chem. Co.*, 520 U.S. 17 (1997) (*en banc* decision with multiple opinions on doctrine of equivalents); *Festo Corp. v. Shoketsu Kinzoku Kogyo Kabushiki Co., Ltd.*, 535 U.S. 722 (2002) (same); *Pfaff v. Wells Elecs.*, 525 U.S. 55 (1998) (persistent division on standards for "on-sale bar"). Petitioners do not even purport to show otherwise. The most they do is to cite an article by Judge Gajarsa (Pet. 9), which is not a judicial pronouncement, and which says nothing to disagree with the legal principles governing this case. Notably, Judge Gajarsa did not even request a response to the rehearing petition, let alone vote for rehearing.

Further, exhaustion issues, even taken as a whole, arise only occasionally, and the specific issue of what constitutes a sufficiently restricted sale arises very rarely. *See also* note 11, *infra*. In this respect, this case contrasts sharply with other patent cases this Court has reviewed in recent years, which have involved issues—such as infringement under the doctrine of equivalents, invalidity for obviousness, and the availability of injunctive relief, *see Warner-Jenkinson, supra*; *Festo, supra*; *KSR Int'l Co. v. Teleflex, Inc.*, No. 04-1350,

oral argument held Nov. 28, 2006; *eBay Inc. v. MercExchange, LLC*, 126 S. Ct. 1837 (2006)—that arise in the mine-run of patent cases week in and week out. Nothing close to such pervasiveness applies to exhaustion issues even in general, much less to the aspects involved in this case.

C. The Decision Presents A Narrow Case-Specific Application, Having No Broad Importance, of a Legal Principle That Petitioners Have Accepted and That Is Settled Under This Court's Precedents

Petitioners cannot, as they did not below, challenge the legal principle applicable here: that a patentee (like LGE) *can* restrict the sales of its manufacturer-licensee (like Intel) to the licensee's customers (like petitioners). Whether particular terms of dealing effectuate such a restriction is all this case involves, and is merely a matter of drafting for other patentees and their licensees. Of course, a restriction must not violate the Sherman Act or *other* legal proscriptions, but that is not an issue here. The ruling below thus rests on no more than a narrow application of a legal principle that the Petition repeatedly accepts and that in any event petitioners cannot dispute, both because they waived any such challenge below and because the precedents of this Court—notably, *Mitchell v. Hawley* and *General Talking Pictures*—firmly establish the principle.

1. The Federal Circuit resolved a narrow question under the accepted legal principle governing the situation where a patentee, rather than making and selling its own articles, enters into a license agreement with a manufacturer of articles that the latter sells. That legal principle permits restrictions to preserve the patentee's rights, as both courts below (and even petitioners) recognized. The Federal Circuit decided that the particular dealings between LGE and Intel and petitioners were sufficiently restricted.

The Petition affirmatively confirms the narrowness of the issue actually presented. Much of the Petition is in terms a case-specific argument about whether the sale here was properly restricted. Pet. 17-21. And the only other significant component of the Petition is its wide-ranging discussion of precedents (Pet. 11-17, 22-27) that the Petition itself distinguishes from this case.

Thus, the Petition takes pain to emphasize the distinction between the situation presented here—a patentee's license to a manufacturer followed by the licensee's sale of an article—and the situation presented where (unlike in this case) the patentee itself makes and sells the article supposedly freed by sale from patent restraints. Pet. 25; *see* Pet. 7, 30. That distinction renders beside the point the bulk of the *legal* discussion in the Petition: its walk-through of precedents not involving the licensee-sale situation (Pet. 11-17); and its attack (relying on a couple of articles) on the Federal Circuit's ruling in *Mallinckrodt, Inc. v. Medipart, Inc.*, 976 F.2d 700 (Fed. Cir. 1992), and later decisions, for *extending* to the patentee-sale setting the settled principle allowing restrictions in the licensee-sale setting. Pet. 22-27. Simply, issues about *Mallinckrodt* and the patentee-sale setting are not presented here; if that situation presents issues warranting this Court's review, they must await a case that involves that situation. Despite the effort to sow confusion and uncertainty, the Petition effectively acknowledges that none exists for the only situation that this case presents.

2. The Federal Circuit's decision that this particular case involves a restricted sale is not of wide importance. We have already noted the fact that the issue does not arise often. In addition, the accepted governing legal principle makes the particular resolution here relatively inconsequential.

Because the legal principle is not subject to dispute by petitioners, *i.e.*, that patentees *can* restrict their licensees to preclude passing on any authority to practice their patents, the

particular language needed to accomplish that result is in the end just a matter of drafting in the process of commercial dealing. Even if petitioners were right (which they are not) that the particular Agreements here were not drafted tightly enough to preserve LGE's exclusivity rights, the next license in the next case can readily do so. A case-specific ruling about what language works or does not work, when the legal principle is settled (as it is here), is therefore of no great moment. The real-world process of licensing and negotiation (here among large commercial enterprises) determines whether what is permitted by the accepted governing legal principle has been accomplished.

Petitioners recognize the prevalence of licensing restrictions in the marketplace. Pet. 6, 26-27 (software). How such terms are construed and applied can always be controlled by drafting clarity. Moreover, as in this case, construction will often be a matter, at least in part, of *state* law. *See* note 2, *supra*. For those reasons—and because the record in this case does not contain any further terms of dealing between Intel and petitioners (Reh'g Pet. 3 ("[t]he sales documents between Intel and [petitioners] . . . are not in the record"))—this Court's review of the case-specific conclusion about the dealings in this case is not warranted.

3. Petitioners do not, and in any event cannot, challenge the governing principle—that a sufficient restriction on the licensee's ability to authorize its customers to practice the patents sale *does* eliminate exhaustion. Most of the Petition expressly accepts the principle and merely disputes whether the dealings in this particular case involved such a restriction. *E.g.*, Pet. 7 ("a patent owner *may* place restrictions on manufacturing licensees"); Pet. 8 ("[l]icenses may be conditional"). Petitioners make one passing effort to transform their case-specific argument into a genuine legal dispute by intimating that they are challenging the principle itself, saying that "an authorized first sale of a patented article" simply "nullifies

any 'conditions' that the patent owner has tried to attach to its use or resale." Pet. 2. But that suggestion is wholly undeveloped, is stated as applying only to the sale of a "patented article" (which is not this case), and contradicts the Petition's own pervasive recognition of the legal principle. In any event, and decisively, petitioners waived any challenge to this principle below.

Petitioners told the district court that "restrictions placed on the direct *licensee* determine whether a subsequent third party purchaser is similarly restricted." Defts' Response to Questions (Dec. 4, 2002), at 6. They added: "all a patentee has the right to do is choose which of the rights it wishes to waive with respect to a licensee and its licensed products." *Id.* at 8; *id.* ("A century of legal authority holds that it is the scope of the license granted to the direct *licensee* that sets the parameters for permissible conduct by subsequent purchasers from that licensee."). Accordingly, "[i]f LGE had wished to legally restrict Intel's customers' use of the licensed products, it could, and indeed should, have place the same limitations on the rights it granted to Intel." *Id.* at 9.

Similarly, in the court of appeals petitioners never disputed, as the district court itself accepted, that a patentee *can* restrict its licensee's ability, through the licensee's sales, to permit the buyers to practice the patents. Rather, petitioners' legal premise was that "the patent exhaustion doctrine is based on the principle that the *unrestricted or unconditional* 'sale of a patented article, by or with the authority of the patentee, 'exhausts' the patentee's right to control further sale and use of that article by enforcing the patent under which it was first sold.'" Petrs' CAFC Br. 18 (emphasis added; citation omitted). *See id.* at 30 ("the unremarkable proposition that a sale can be conditional and that a conditional sale would not implicate the patent exhaustion doctrine").

When they lost before the panel, petitioners did not seek rehearing on the legal principle, but only its application,

asking simply whether the LGE-Intel-petitioners dealings were in fact conditional sales. *See* note 8, *supra*. Indeed, they expressly accepted the legal principle, merely disputing the particulars of the dealings in this case: "if LGE had wanted to limit or condition Intel's ability to distribute the Licensed Products, it could have included limitations in the license grant itself. For example, it could have granted Intel only the right to sell Licensed Products to those customers that had obtained a separate license from LGE; alternatively, it could have granted Intel only the right to sell Licensed Products for use in combination with other Intel products." Reh'g Pet. 7.

4. Petitioners' concessions below were correct. Even the Petition acknowledges that, *in the licensee-sale setting*, the precedents of this Court, namely *Mitchell v. Hawley* and *General Talking Pictures*, are clear. Thus, the Petition, insisting on the distinction between the patentee-sale situation and the licensee-sale situation, recognizes that it is long settled in this Court that "a patent owner *may* place restrictions on manufacturing licensees." Pet. 7 (emphasis by petitioners); *see* Pet. 24-25 (*General Talking Pictures* "holds that breach of a condition in a manufacturing license permits an infringement suit against both licensee and purchaser, because exhaustion is triggered only by an *authorized* sale") (emphasis by petitioners). Likewise, the very articles on which petitioners rely recognize the "well accepted" understanding of *General Talking Pictures* and of *United States v. Gen. Elec. Co.*, 272 U.S. 476 (1926), that exhaustion does not override a patentee's freedom to restrict its licensee's ability to convey patent-practicing authority to the licensee's customers.[9]

---

[9] Kobak, *Contracting Around Exhaustion: Some Thoughts About the CAFC's* Mallinckrodt *Decision*, 75 J. Pat. & Trademark Off. Soc'y 550, 554-55 (1993), recognizes the principle, then criticizes the *extension* of that "well accepted" principle to patentee sales in *Mallinckrodt*. *See* Pet. 30 (quoting Kobak). The same is true of Stern, *The Unobserved Demise*

That principle is founded directly in *Mitchell v. Hawley*, in which the patentee gave his licensee the right to make, use, and sell the patented machine during the original patent term, but provided "that the licensee 'shall not, in any way, or form, dispose of, sell, or grant any license to use the said machines beyond the expiration' of the original term." 83 U.S. at 549 (emphasis deleted). After the patent term was extended, the patentee sued the licensee's customers who, having bought the machines during the original term, continued using them during the extension term. This Court, stating the principle that patent rights can be lost by a sale "*without any conditions*" (*id.* at 547 (emphasis added)), affirmed an injunction against the purchasers' continued use on the ground that the licensee could not pass to his customers rights that had been withheld in his license from the patentee:

> [T]he instrument of conveyance from the patentee to him, which describes all the title he ever had, expressly stipulates that he shall not in any way or form dispose of, sell, or grant any license to use the said machines beyond the expiration of that term of the patent, and the form of the license which he gave to the purchasers shows conclusively that he understood that he was not empowered to give a license which should extend beyond that limitation.

Id. at 550. Even had there been *no notice to the purchasers* (here, of course, petitioners got notice), the licensee-seller could not convey rights it did not have: "Notice to the purchaser in such a case is not required, as the law imposes the risk upon the purchaser, as against the real owner,

---

of the Exhaustion Doctrine in U.S. Patent Law, 15 Eur. Intell. Prop. Rev. 460 (1993)—which, as the Petition indicates (Pet. 25), expressly indicates that, *for licensee-sale* cases, the rule of *General Talking Pictures* and *Gen. Elec.* was clear and well-established. Stern, 15 Eur. Intell. Prop. Rev. at 460 ("the doctrine permitting limited manufacturing licences" was "clear" and "fixed" by time of *Gen. Elec.*).

whether the title of the seller is such that he can make a valid conveyance." *Id.* *Mitchell*, whose ruling was unmistakable, has been followed by this Court, and no decision has repudiated it. *E.g.*, *General Talking Pictures*, 305 U.S. at 127; *Keeler v. Standard Folding-Bed. Co.*, 157 U.S. 659, 662 (1895); *Waterman v. McKenzie*, 138 U.S. 252, 255 (1891).

Petitioners invoke other authorities in their effort to broaden the range of issues laid before this Court. But as confirmed by their acknowledgment of the settled principle governing the licensee-sale situation, they do not and cannot assert that this Court has ever repudiated the licensee-restriction principle of *Mitchell* and *General Talking Pictures*. Only two of the cases petitioners cite warrant discussion.

First, petitioners feature *Motion Picture Patents Co. v. Universal Film Mfg. Co.*, 243 U.S. 502 (1917), as the seminal case that supposedly re-shaped exhaustion doctrine 90 years ago. Pet. 2, 15, 27. But *Motion Picture Patents* is irrelevant: it plainly did nothing to renounce the principle allowing patentees to restrict their licensees' sales and thereby preserve their right to sue for infringement—as confirmed by the fact petitioners nowhere even cited it in the court of appeals, either in their merits briefs or in their rehearing petition. Rather, *Motion Picture Patents* simply gave rise to the *patent misuse* bar on certain tying arrangements involving required purchases of non-patented articles—a doctrine that is not at issue here and that has since been cut back both congressionally and judicially. *See Illinois Tool Works Inc. v. Independent Ink, Inc.*, 126 S. Ct. 1281, 1286 n.2, 1288, 1290 (2006). Moreover, petitioners themselves expressly recognize that the Court's decisions in *General Talking Pictures* and *General Electric*, *after* the Court's decision in *Motion Picture Patents*, continued to hold that sufficient conditions on "manufacturing *licensees*" preserve the patentee's patent-

enforcement rights. Pet. 15-16. *Motion Picture Patents* thus cannot help petitioners.[10]

Petitioners also are wrong in relying on this Court's decision in *United States v. Univis Lens Co.*, 316 U.S. 241 (1942)—for multiple reasons. To begin with, they are flatly wrong in asserting that *Univis Lens* "held that the conditions imposed by the licenses were invalid because of the exhaustion doctrine." Pet. 24; *see* Pet. 18. The Court in *Univis Lens* held that certain license conditions, involving resale price maintenance, were invalid *under the Sherman Act* (in a Government-brought antitrust suit, not an infringement action), and it rejected the *defense* that the patent statute overrode the proscription of the Sherman Act. The Court thus merely held that the patent statute did not authorize an *otherwise-invalid* restriction on a license. It did not hold that the exhaustion doctrine overrode an otherwise-valid license restriction. And the Court said nothing whatever to question or to alter the pre-existing principle of *Mitchell v. Hawley*, *General Talking Pictures*, and *General Electric*.

Moreover, *Univis Lens* nowhere endorses petitioners' novel position: that patent rights are lost as a matter of law under some exhaustion principle, even where the circumstances *negate* a license, as they do here. To the contrary, *before* its single use of the term "exhaust"—which it expressly states in terms of sale of a "patented article" (again, not this case), 316 U.S. at 250—the Court in *Univis Lens* had already drawn the conclusion that the circumstances confirmed, rather than negated, a "license." *Id.* at 249. The Court cited the facts that the case involved mere finishing of the article for its only viable use, *id.* at 249, that the patentee

---

[10] Petitioners make a passing reference to copyright law. Pet. 14. The copyright statute, however, explicitly crafts limitations on the rights-holder's exclusivity rights with respect to particular copies. 17 U.S.C. § 109. Congress has enacted no such limitation to the exclusivity rights of patentees under 35 U.S.C. § 154.

had, by its contracts, restricted its own monetary payments to its initial licensee, *id.* at 245, 249-50, and that the finisher bought the unfinished unit "without more" in the way of valid restrictions, *id.* at 251. Simply: *Univis Lens*, finding a license, cannot be precedent for finding exhaustion despite the negating of a license.

In their walk-through of precedents, petitioners make a passing suggestion (Pet. 23) that this Court has rigidly separated "exhaustion" and "implied license" cases. But that is not true. In fact, this Court in *Aro Mfg. Co. v. Convertible Top Replacement Co.*, 377 U.S. 476, 484 (1964), expressly treated both this Court's decision in *Univis Lens* and its decision in *Adams v. Burke*, 84 U.S. 453 (1873)—which petitioners note is "widely regarded as the leading case on patent exhaustion" (Pet. 11)—as involving "'an implied license to use'" conveyed through an authorized sale, distinguishing sales made without the required authority as giving "the purchasers no implied license to use," so that purchasers' use would be "'without authority' and infringing under § 271(a)." 377 U.S. at 484.

In short, the governing legal principle for the licensee-sale situation is as settled as petitioners' (and the district court's and court of appeals') acceptance of it indicates. The decision below presents no issue about the governing legal principle, well settled since *Mitchell v. Hawley* and *General Talking Pictures*.

D. The Decision Is Correct

1. The Federal Circuit's case-specific ruling is correct. The circumstances are in all material respects like *Mitchell v. Hawley*. Intel did not receive and could not convey the "authority" petitioners need in order for their practice of LGE's combination patents to be anything other than infringement. The Agreements with Intel made it clear that LGE was *not* giving Intel the right to authorize Intel's cus-

tomers to practice LGE's patents by combining Intel's components with non-Intel components; and the Notice clearly told petitioners that such authority was not among the property rights they were getting in buying the components. Intel therefore "could not convey" to its buyers "what both knew it was not authorized to sell." *General Talking Pictures*, 304 U.S. at 181.

The Master Agreement—of which the Cross-License Agreement is a part (though not vice versa)—makes crystal clear that the parties had this very situation in mind when forming their contracts. The "whereas" clauses state that the intent was for LGE to *retain* its enforcement rights against computer manufacturers like petitioners. The Agreements expressly withhold from Intel any entitlement to pass on the authority to practice these patents that petitioners need in order for their making, selling, and using the computers covered by LGE's patents to be anything but infringement, which is statutorily defined to include precisely those activities if "without authority." 35 U.S.C. § 271(a). The license-granting provisions are subject to the terms and conditions that unmistakably withhold the "authority" from petitioners—who, of course, were expressly notified of that very withholding of authority. The Federal Circuit simply gave the common-sense reading to the simultaneously executed LGE-Intel Agreements: Intel could not give and petitioners did not get authority to practice LGE's patents. Even viewed as a contract matter, the ruling reflects the "cardinal principle of contract construction: that a document should be read to give effect to all its provisions and to render them consistent with each other." *Mastrobuono v. Shearson Lehman Hutton, Inc.*, 514 U.S. 52, 63 (1995).[11]

---

[11] The Petition contains one paragraph (Pet. 21) challenging the Federal Circuit's sentence stating that "the sale of a device does not exhaust a patentee's rights in its method claims." Pet. App. 6a. The Petition does not suggest any separate ground for reviewing that issue: it neither breaks

2. Contrary to petitioners' assertion, there is nothing remotely "absurd" or "unconscionable" (Pet. 19) about this result—as petitioners' consistent concession about the legal principle, and this Court's adherence to that principle, indicate. Simply, nothing in the Patent Act, which grants plenary exclusivity rights to the patentee (35 U.S.C. § 154(a)(1)) and bars others from practicing the patents "without authority" (35 U.S.C. § 271(a)), overrides the patentee's freedom to enter into otherwise-lawful contracts that clearly parcel out those exclusivity rights to various users, with partial payments negotiated with each.

Indeed, the Court in *Birdsell v. Shaliol*, 112 U.S. 485 (1884), held that a patentee may sue both a manufacturer and user of a patented product and recover separate damages from each, as long as the amounts are not duplicative. Similarly, the Court in *Aro Mfg.*, 377 U.S. at 501, held that a "release given a direct infringer in respect of past infringement, which

---

out a Question Presented focused on whether method claims can be exhausted by a sale, nor identifies any conflict over the issue, nor shows that the issue arises more than episodically. The method-claim sentence, moreover, has no effect on the judgment, once the conditional-sale ground is left in place, for the Federal Circuit's opinion independently rejects exhaustion of the method claims on the same conditional-sale ground as applied to the apparatus claims. Pet. App. 6a.

In any event, the method-claim sentence is itself correct. Each patent claim defines a separate patented invention, and exhaustion, as stated expressly by petitioners' main authority, is limited to sale of a "patented article" (*Univis Lens*, 316 U.S. at 250; Pet. 6 (exhaustion rule based on sale of "patented article")), but an "article" is not "patented" by a *method* claim—which therefore cannot be exhausted. Of course, a sale of certain articles can convey a "license" to practice certain method claims, which is what occurred in *Univis Lens*, 316 U.S. at 249, but petitioners now accept that there was no such license in this case. The implied license doctrine fully addresses the method-claim situation.

The Federal Circuit's method-claim sentence, being correct and not warranting review, precludes exhaustion for the *method* claims even apart from the licensee-restriction issue, as the district court held.

clearly intends to save the releasor's rights against a past contributory infringer, does not automatically surrender those rights." There is no good reason for a different rule from the forward-looking perspective: an authorization to one in the chain of firms contributing to an infringing end product does not by law constitute authorization to others further down the chain, *i.e.*, forfeit the preserved exclusivity rights regarding them.

The amounts of money that will change hands at each level, of course, will be affected by whether the authorizations are partial or complete. *See* Pet. App. 5a (quoting *B. Braun Med. Inc. v. Abbott Labs.*, 124 F.3d 1419, 1426 (Fed. Cir. 1997)). Moreover, some restrictions may be unlawful under the Sherman Act or patent-misuse doctrine or otherwise; perhaps, too, some restrictions might not be adequately communicated to the purchasers (who might have certain equitable rights as a result). But where, as here, there are no such independent illegality or notice concerns, the parceling out of the exclusivity rights is simply a matter for negotiation in the marketplace, not for a legal override of commercially fashioned terms.[12]

3. Although the Petition's Statement relies on a provision in the Cross License Agreement that refers to exhaustion (Pet. 3-4), the Petition's Argument that the Federal Circuit erred (Pet. 7, 17-21) makes no mention of the provision, and for good reason: the provision does not help petitioners. The district court, though it found exhaustion in part, did not rely on the provision at all. And there is no evidence that *petition-*

---

[12]Practitioner Richard Ulmer said recently even about the extension of the principle to the patentee-sale situation in *Mallinckrodt*: "To our mind, all Mallinckrodt did was to allow patent rights, the right to exclude, to be treated in the same way as other property rights. When you step back and think about it, why shouldn't that be so? Why shouldn't freedom of contract also apply in the patent arena? . . . [T]he Mallinckrodt case was well-reasoned, well-decided." *Symposium*, 16 Fordham Intell. Prop. Media & Ent. L.J. 1025, 1043 (2006) (footnote omitted).

ers, upon receiving the clear Notices denying them LGE's authority to practice LGE's patents, ever were aware of this clause (the Agreements' terms were confidential), which thus could not have undermined their clear understanding from the Notices that they were being denied authority. In any event, the provision does not change the result that otherwise applies in this case.

The provision, ending the paragraph of the Cross License Agreement that pointedly denies the grant of any permission to third parties to make infringing combinations, uses limited language: "Notwithstanding anything to the contrary contained *in this Agreement*, the parties agree that nothing *herein* shall in any way limit or alter the effect of patent exhaustion that would otherwise apply *when a party hereto sells any of its Licensed Products*." CAFC JA3614 (§ 3.8) (emphases added). That provision, in referring only to the effect of the *Patent Cross License Agreement*, says nothing to limit the effect of the simultaneously entered *Master Agreement* (which is not part of the Cross License Agreement) on how "exhaustion" would apply. *See* Petrs' CAFC Br. 19 ("In the Intel-LGE license, LGE agreed that *the license* did not limit the effect of patent exhaustion.") (emphasis added). And, as relevant here, the only subject it addresses is whether exhaustion would apply when Intel sells Intel products as LGE's licensee—which is precisely the circumstance in which this Court's decisions, as recognized by petitioners, establish that exhaustion does *not* apply when the patent holder has limited the rights it granted in the first place to the manufacturer, certainly where the restriction is made known at the time of the manufacturer-licensee's sale to third parties. That is what the *Master Agreement* and follow-up Notices to petitioners in fact did.[13]

---

[13] Petitioners quote (Pet. 4, 19) a sentence of the Master Agreement stating that "a *breach* of this Agreement shall have no effect on and shall not be grounds for termination of the Patent License." CAFC JA3622

4. Although the Petition, as atmospheric background, recites certain dollar figures in its nonpublic portions (at 2, 3, 9), petitioners cannot rely on those figures to challenge the decision below. In the Federal Circuit, they merely mentioned, in a footnote, what amounts LGE paid to its affiliate LG LCD to acquire the patents at issue and what amounts LGE received as part of its complex total-portfolio cross-licensing deal with Intel. Petrs' CAFC Br. 29 n.10. They presented no argument based on those figures; moreover, the law is clear in the Federal Circuit that "arguments raised in footnotes are not preserved." *SmithKline Beecham Corp. v. Apotex Corp.*, 439 F.3d 1312, 1320 (Fed. Cir. 2006) (citing earlier decisions). Nor have petitioners ever presented an economic analysis to show that the dollar comparisons make any sense or that LGE received the full economic value for its patents from Intel. Not surprisingly, neither the district court nor the court of appeals even mentioned the figures or found that LGE had received its "full" reward for its payments.[14]

It is apparent why petitioners cannot make a coherent argument based on the dollar figures: they are comparing apples and oranges, and unsoundly characterizing the apples and oranges at that. Contrary to petitioners' suggestion, not all the figures are cash payments at all; some involved benefits to the "paying" party. In any event, what LGE paid to a related corporate entity (for a bundle of patents) does not establish the worth of these particular patents. Similarly, the "payment" received from Intel was part of a complex exchange, in which,

---

(§ 1) (emphasis added). Limiting the consequences of a possible *breach*, however, is a quite different matter from erasing the plain authority-restricting effect of the Master Agreement while it is being *performed*.

[14] In this respect, too, this case is wholly unlike *Univis Lens*, in which the express terms of the licensing arrangement made clear, as this Court took pains to emphasize (316 U.S. at 245, 249-50), that the patent holder had secured its full payment from its initial licensee (there was no payment demanded from others).

among other things, LGE licensed its entire portfolio (hundreds of patents) to Intel, including patents not at issue here, such as a patent directly covering Intel's chips. Again, what LGE got (or would get) cannot be attributed to the particular patents at issue here, let alone be viewed as fully exhausting those patents' value.

To the contrary, the recitals and reservations of rights against third parties in the LGE-Intel Agreements make plain that LGE was *not* exhausting these patents' value. The Intel "payment" must therefore be viewed as only partial. *See* Pet. App. 5a. Indeed, when LGE showed that the Intel figure was only a tiny fraction of what LGE would obtain from even a low-level royalty on the infringing computers (LGE SJ Opposition and Cross-Motion, Sept. 20, 2002, at 17 n.10), petitioners all but conceded the point: they responded not by contesting the simple calculation but by saying that it was just too bad if LGE did not "exact what it perceives to be the full value of its patents from Intel." FIC/Compal Reply, Sept. 27, 2002, at 7 n.3. Petitioners cannot now draw any legitimate contrary lesson from the naked figures they present.

CONCLUSION

The petition for a writ of certiorari should be denied.

Respectfully submitted,

RICHARD G. TARANTO
Counsel of Record
FARR AND TARANTO
1220 19th Street, NW
Suite 800
Washington, DC 20036
(202) 775-0184

March 9, 2007

FILED
MAR 2 0 2007
OFFICE OF THE CLERK
SUPREME COURT, U.S.

(5)

No. 06-937

In the Supreme Court of the United States

QUANTA COMPUTER, INC., QUANTA COMPUTER USA, INC., Q-LITY COMPUTER, INC., COMPAL ELECTRONICS, INC., BIZCOM ELECTRONICS, INC., SCEPTRE TECHNOLOGIES, INC., FIRST INTERNATIONAL COMPUTER, INC. AND FIRST INTERNATIONAL COMPUTER OF AMERICA, INC.,

PETITIONERS,

v.

LG ELECTRONICS, INC.,

RESPONDENT.

ON PETITION FOR A WRIT OF CERTIORARI TO THE UNITED STATES COURT OF APPEALS FOR THE FEDERAL CIRCUIT

REPLY BRIEF OF PETITIONERS

TERRENCE D. GARNETT
VINCENT K. YIP
PETER WIED
PAUL, HASTINGS, JANOFSKY & WALKER LLP
515 SOUTH FLOWER STREET
25TH FLOOR
LOS ANGELES, CA 90071
(213) 683-6000
Counsel for Quanta Computer, Inc., Quanta Computer USA, Inc., Q-Lity Computer, Inc.

MAUREEN E. MAHONEY
Counsel of Record
J. SCOTT BALLENGER
ANNE W. ROBINSON
LATHAM & WATKINS LLP
555 11TH STREET N.W.
SUITE 1000
WASHINGTON, D.C. 20004
(202) 637-2200
Counsel for Petitioners

Additional Counsel Listed on Inside Cover

MAXWELL A. FOX
PAUL, HASTINGS, JANOFSKY
& WALKER LLP
34 F ARK MORI BUILDING
P.O. BOX 577
12-32 AKASAKA 1-CHOME
MINATO-KU, TOKYO 107-6034
JAPAN
813 6229 6100

Counsel for Quanta Computer, Inc., Quanta Computer USA, Inc., Q-Lity Computer, Inc.

RONALD S. LEMIEUX
PAUL, HASTINGS, JANOFSKY
& WALKER LLP
5 PALO ALTO SQUARE
6TH FLOOR
PALO ALTO, CA 94306

Counsel for First International Computer, Inc. and First International Computer of America, Inc.

WILLIAM J. ANTHONY, JR.
ERIC L. WESENBERG
KAI TSENG
MATTHEW J. HULT
ROWENA Y. YOUNG
ORRICK, HERRINGTON
& SUTCLIFFE LLP
1000 MARSH ROAD
MENLO PARK, CA 94025
(650) 614-7400

Counsel for Compal Electronics, Inc., Bizcom Electronics, Inc., Sceptre Technologies, Inc.

TABLE OF CONTENTS

Page

TABLE OF CONTENTS.....i

TABLE OF AUTHORITIES..... ii

ARGUMENT.....1

CONCLUSION.....10

TABLE OF AUTHORITIES

Page(s)

CASES

Adams v. Burke,
84 U.S. 453 (1873) 3, 4, 9

Fuji Photo Film Co. v. ITC,
474 F.3d 1281 (Fed. Cir. 2007) 10

General Talking Pictures Corp. v. Western Electric Co.,
304 U.S. 175 (1938) 2

Grosso v. United States,
390 U.S. 62 (1968) 6

Henry v. A.B. Dick Co.,
224 U.S. 1 (1912) 1

Hewlett-Packard Co. v. Repeat-O-Type Stencil Manufacturing Corp.,
123 F.3d 1445 (Fed. Cir. 1997) 6

Jazz Photo Corp. v. ITC,
264 F.3d 1094 (Fed. Cir. 2001) 6

Keeler v. Standard Folding Bed Co.,
157 U.S. 659 (1895) 4

Leary v. United States,
395 U.S. 6 (1969) 6

Lebron v. National Railroad Passenger Corp.,
513 U.S. 374 (1995) 6

Mallinckrodt, Inc. v. Medipart, Inc.,
976 F.2d 700 (Fed. Cir. 1992) 1

TABLE OF AUTHORITIES—Continued

Page(s)

Mitchell v. Hawley,
83 U.S. 544 (1873) 3

Motion Picture Patents Co. v. Universal Film Manufacturing Co.,
243 U.S. 502 (1917) 1

PGA Tour, Inc. v. Martin,
532 U.S. 661 (2001) 6

RFR Industries v. Century Steps, Inc.,
Nos. 2005-1610, 2006-1285, 2007 U.S. App. LEXIS 3382 (Fed. Cir. Feb. 16, 2007) 10

United States v. Univis Lens Co.,
316 U.S. 241 (1942) 3, 7

Yee v. City of Escondido,
503 U.S. 519 (1992) 6

OTHER AUTHORITY

Fed. R. App. P. 40(a) 6

Richard H. Stern, *The Unobserved Demise of the Exhaustion Doctrine in U.S. Patent Law: Mallinckrodt v. Medipart*, 15 Eur. Intell. Prop. Rev. 460 (1993) 7

Robert L. Stern et al., *Supreme Court Practice* § 6.25 (8th ed. 2002) 6, 10

Sup. Ct. R. 13(3) 6

ARGUMENT

Respondent says Petitioners have conceded that licenses may contain conditions, and pretends that is all this case involves. That is sleight of hand. Manufacturing licenses may have conditions on what sales are authorized, but an authorized sale exhausts the patent and ends the patentee's right under the patent laws to restrict the use or resale of the sold goods. (Whether the patentee could still enforce a *contractual* promise by the purchaser, under contract law, is a different question not presented here.) Respondent contends that its theoretical ability to place limits on Intel's license to *make and sell* (which it did not exercise) is the same thing as a right to limit Petitioners' *use* of goods that they have duly purchased. It is not the same, and once that mistake is understood Respondent's arguments fall apart.

1. The petition explained that the Federal Circuit precedent allowing patent owners to sell goods subject to use or resale "conditions," starting in *Mallinckrodt, Inc. v. Medipart, Inc.*, 976 F.2d 700 (Fed. Cir. 1992), conflicts with this Court's cases and is the subject of widespread scholarly condemnation. The Federal Circuit has essentially revived the old rule of *Henry v. A.B. Dick Co.*, 224 U.S. 1 (1912), that a purchaser's right to use a patented good is a matter of implied license rather than patent exhaustion ("nothing more nor less than an unrestricted license presumed from an unconditional sale," *id.* at 24) and therefore can be limited or defeated if the patent owner specifies "conditions" or restrictions on the purchaser's "license" to use or resell the goods it has purchased. That has not been the law since this Court expressly overruled *A.B. Dick* in *Motion Picture Patents Co. v. Universal Film Mfg. Co.*, 243 U.S. 502 (1917).

The brief in opposition does not even try to defend the *Mallinckrodt* principle. Instead, it suggests that cases like *Mallinckrodt* involve "patentee sales" whereas this is a "licensee sale" case. Opp. 18-19 n.9. It argues that this Court has held (and that Petitioners have conceded, in the petition and below) that a patent owner may impose whatever conditions or limitations it likes on a license

granted to a manufacturing licensee. Respondent completely misses the point of this Court's cases, and of Petitioners' argument.

Respondent relies heavily on *General Talking Pictures Corp. v. Western Electric Co.*, 304 U.S. 175 (1938), which holds that exhaustion is triggered only by an *authorized* sale. Just as the patentee may choose which customers it wants to sell to, it may authorize its licensee to sell only to some customers. In *General Talking Pictures* this Court held that a customer who purchased goods from a licensee *knowing that the licensee lacked authority to make that sale* could be sued for infringement. This Court reasoned that the authorized sale necessary to trigger exhaustion never happened, and therefore the customer was not "'a purchaser in the ordinary channels of trade.'" *Id.* at 180-81.

That principle does not apply here because it is undisputed that Intel had authority to make these sales. Respondent contends that *General Talking Pictures* stands for a broader principle: that patentees may authorize a licensee to make sales *subject to conditions on the purchaser's use or resale of the good*, and then sue the purchaser for infringement if it violates those conditions. In other words, it asserts that a patentee can insert language into manufacturing licenses specifying that an authorized sale by the licensee will not have its ordinary legal effect (exhaustion). That misunderstands *General Talking Pictures* and the petition's discussion of the difference between licenses and sales. A license can have conditions, but a sale cannot. A sale exhausts the patent. A patent owner can place conditions on a licensee's right to make or sell, but it cannot authorize the licensee to sell an article *without exhausting the patent monopoly in that article.*

Respondent's position appears to be that even if a sale by the patentee itself exhausts the patent and nullifies any "conditions," a sale by *a licensee* need not have that effect, if the patentee has otherwise specified in the license. That proposed distinction is inconsistent with this Court's cases, which have always recognized that "in the essential nature

of things, when the patentee, *or the person having his rights*, sells a machine or instrument whose sole value is in its use, he receives the consideration for its use and he parts with the right to restrict that use." *Adams v. Burke*, 84 U.S. 453, 456 (1873) (emphasis added). *Adams* involved a sale by a licensee/assignee rather than the patentee. So did *United States v. Univis Lens Co.*, 316 U.S. 241, 244 (1942). Respondent's proposed distinction is also absurd. Licensing someone else to exercise the patentee's rights cannot expand those rights. The patentee cannot do indirectly what this Court's cases prohibit it from doing directly. Otherwise every patentee would erect a shell entity to "license" its patents, and then let that shell make the sales.

Respondent also points to *Mitchell v. Hawley*, 83 U.S. 544 (1873). The language in *Hawley* that Respondent relies on represented one strand in this Court's early case law—the line of reasoning that ultimately produced *A.B. Dick*, but was rejected in *Motion Picture Patents*. Pet. 12-15. *Hawley* was never overruled, but that is because its actual holding is consistent with this Court's later cases (and with Petitioners' position here). The licensee was given the right "to make and use 'and to license to others the right to use the said machines,'" but that license expressly provided that the licensee "'shall not, in any way or form, dispose of, sell, or grant any license to use the said machines beyond the expiration' of the original term" of the patent. *Hawley*, 83 U.S. at 548-49. Since the licensee in *Hawley* had the right to make and use the patented invention, and to license others to use it (subject to conditions), but "never had any power to sell a machine so as to withdraw it indefinitely from the operation of the franchise secured by the patent," *id.* at 551, its sale of the machines to Mitchell was unauthorized by the license and therefore did not trigger exhaustion. *Hawley* is an early application of the *General Talking Pictures* principle. It does not support Respondent's claim that an authorized sale can be burdened with "conditions."

There is an important distinction between licenses and sales. But there is no distinction between "patentee sales"

and "licensee sales" for exhaustion purposes. Certainly the Federal Circuit has not drawn such a distinction; it said this case is controlled by *Mallinckrodt* and its other precedents permitting sales to be "conditional" whoever the seller is.

2. Respondent's suggestion that this case involves only the adequacy of particular license language fails for the same reasons. No clever drafting can achieve a "conditional sale," because as a matter of law "one who buys patented articles of manufacture from one authorized to sell them becomes possessed of an absolute property in such articles, unrestricted in time or place." *Keeler v. Standard Folding Bed Co.*, 157 U.S. 659, 666 (1895); *see Adams*, 84 U.S. at 456.

Respondent might have achieved something like what it seeks here by procuring an actual contractual agreement from Petitioners that they would not use chips purchased from Intel without obtaining a separate license, and then enforcing that promise via ordinary contract law rather than an infringement suit. *Keeler*, 157 U.S. at 666 ("Whether a patentee may protect himself ... by special contracts brought home to the purchasers is not a question before us," but "[i]t is, however, obvious that such a question would arise as a question of contract" rather than patent infringement.). It might have specified that Intel was not authorized to sell its chips unless the customer signed such a contract—or that Intel could not *sell* its chips at all, but (as in *Hawley*) could only rent them out with a license to use.

But particular legal forms have particular consequences, and holding parties to those consequences does not defeat freedom of contract but enables it. Under this Court's cases, *selling* patented goods frees them forever from the patent monopoly. That rule reduces transaction costs by allowing purchasers to trust they may own and use goods without fear of infringing the device or method patents covering the only reasonable use. "The inconvenience and annoyance to the public that an opposite conclusion would occasion are too obvious to require illustration." *Id.* at 666-67. *Amici* Dell, Inc. *et al.* debunk Respondent's suggestion that the Federal Circuit's rule will produce negotiations

fairly allocating the value of the patent up and down the distribution chain. And that rule does not just give patent owners the same contractual freedom as other property holders. Patentees are as free to use contract law as anyone; the Federal Circuit has granted them a unique power to impose restraints on use or alienation running with chattels and enforce them with the full weight of patent law.

3. Respondent's waiver arguments are incorrect for the same reason. Indeed, it does not genuinely contend that the petition is inconsistent with Petitioners' arguments below; the brief in opposition argues throughout (incorrectly) that Petitioners' arguments below *and in the petition* have accepted Respondent's distinction between "licensee sales" and "patentee sales." Respondent just misunderstands the point of those arguments, below and before this Court.

Respondent quotes Petitioners' briefs arguing that "'the scope of the license granted to the direct *licensee* . . . sets the parameters for permissible conduct by subsequent purchasers from that licensee'" and that "'[i]f LGE had wished to legally restrict Intel's customers' use of the licensed products, it could, and indeed should, have placed the same limitations on the rights it granted to Intel.'" Opp. 17 (quoting Defts' Response to Questions 8-9 (Dec. 4, 2002) ("RQ")). There is no inconsistency. Petitioners' argument below, as in the petition, was that exhaustion applies because "LGE has not claimed that Intel breached the license agreement by selling to [Petitioners]." Reh'g Pet. 8. In other words, because the sales were authorized by Intel's license this case is controlled by *Univis Lens* rather than *Hawley* or *General Talking Pictures*. *See, e.g.*, RQ at 3 ("When an authorized sale is made pursuant to a license, the patent exhaustion doctrine is invoked, and a patentee's rights terminated."); *id.* ("'[The licensee's] conceded right to sell the chips deprives [the patent holder] of any claim of infringement [against the licensee's customers].'").

Respondent also quotes snippets from Petitioners' briefs below arguing that exhaustion applies because these sales were "unrestricted or unconditional." Petitioners framed

their argument below, as they must, in terms of the settled circuit precedent that exhaustion requires an "unconditional" sale. But the substance of their argument, there as here, was that a sale is "unconditional" in the relevant sense, and triggers exhaustion, if the seller had authority to sell. Petitioners also argued that under prior Federal Circuit cases any sale "condition" is enforceable only if it "rises to the level of an enforceable contractual right," which is clearly not true here. Reh'g Pet. 9. Petitioners did not make the unnecessary alternative point, made in the petition, that under this Court's precedents a contractual restriction on the purchaser would, in any event, be enforceable *only under contract law*, not infringement suits. But this Court has consistently held that so long as a *claim* was raised below, parties are entitled to make new *arguments* in support of that claim.[1] Petitioners argued that patent exhaustion applies, relying on the same cases from this Court cited in the petition and on prior Federal Circuit cases indicating that the *Mallinckrodt* holding should not apply here even on its own terms. They were not required to argue in the alternative that exhaustion should also apply because *Mallinckrodt* should be overruled, particularly when that would have been utterly futile in light of circuit precedent.[2]

---

[1] The "traditional rule is that 'once a federal claim is properly presented, a party can make any argument in support of that claim; parties are not limited to the precise arguments they made below.'" *Lebron v. Nat'l R.R. Passenger Corp.*, 513 U.S. 374, 379 (1995) (quoting *Yee v. City of Escondido*, 503 U.S. 519, 534 (1992)); *see also PGA Tour, Inc. v. Martin*, 532 U.S. 661, 678 n.27 (2001); Robert L. Stern et al., *Supreme Court Practice* § 6.25, at 421 (8th ed. 2002).

[2] *See, e.g., Grosso v. United States*, 390 U.S. 62, 70-71 (1968) (failure to raise issue excused because of futility in light of prevailing law); *Leary v. United States*, 395 U.S. 6, 27-29 (1969) (same). The Federal Circuit has declined opportunities to reconsider *Mallinckrodt en banc*. *See, e.g., Hewlett-Packard Co. v. Repeat-O-Type Stencil Mfg. Corp.*, 123 F.3d 1445 (Fed. Cir. 1997) (reh'g *en banc* denied Oct. 14, 1997); *Jazz Photo Corp. v. ITC*, 264 F.3d 1094 (Fed. Cir. 2001) (reh'g *en banc* denied Nov. 9, 2001). And in any event a party does not waive anything by failing to assert it in a rehearing petition. Fed. R. App. P. 40(a); Sup. Ct. R. 13(3).

4. Respondent's brief discussion of the cases from other circuits also suffers from its pervasive misunderstanding of the governing principles. The cases cited at Pet. 25-26 show that prior to the Federal Circuit's creation "'restrictions on the right to sell imposed on manufacturing licensees were enforceable,'" Opp. 13 (quoting Pet. 25), but restrictions on a *purchaser*'s right to use or resell were not. The Federal Circuit's analysis *is not* consistent with those principles, as explained above. Respondent is correct that any conflict is no longer significant after the Federal Circuit's creation, but that just proves that there is no reason to delay review.

5. Respondent argues that *Univis Lens* is just an antitrust case and *Motion Picture Patents* is just a patent misuse case. This is the same error that the Federal Circuit made in *Mallinckrodt*, and that leading commentators have condemned. Pet. 26. *Motion Picture Patents* did not "simply g[ive] rise to the *patent misuse* bar on certain tying arrangements," Opp. 20; it expressly overruled *A.B. Dick* and held that *any* notice restrictions on the use of sold goods are unenforceable because of patent exhaustion, by analogy to the first sale doctrine in copyright. (Respondent's suggestion that statutory differences between the patent and copyright statutes make that analogy inapt is inconsistent with *Motion Picture Patents*.)

Respondent suggests that *Univis Lens* holds only that restrictions are exhausted by an authorized sale if they are also invalid under the antitrust laws. Opp. 21. This Court's holding was that "upon familiar principles the authorized sale of an article which is capable of use only in practicing the patent is a relinquishment of the patent monopoly with respect to the article sold," and it "exhausts the monopoly in that article and the patentee may not thereafter, by virtue of his patent, control the use or disposition of the article." 316 U.S. at 249-50. Like the Federal Circuit, Respondent "is merely saying in a peculiar manner that it does not like the Supreme Court's reasoning and thinks that the Court should have held something else—that it should have reached its end result by a different conceptual route." Richard H.

Stern, *The Unobserved Demise of the Exhaustion Doctrine in U.S. Patent Law: Mallinckrodt v. Medipart*, 15 Eur. Intell. Prop. Rev. 460, 465 (1993). Respondent and the Federal Circuit dislike the exhaustion doctrine and believe patentees should be able to impose restrictions on the use or resale of sold goods, subject only to antitrust laws. That was the *A.B. Dick* rule, rejected by this Court 90 years ago.

Respondent's attempt to distinguish *Univis Lens* on the ground that the facts there "confirmed, rather than negated, a 'license'," Opp. 21, is boldly illogical. The patentee in *Univis Lens* did indeed have license agreements with the purchasers, and those license agreements imposed certain explicit conditions and limitations on the purchasers' use of the purchased goods. This Court's holding was that those conditions and limitations drew no support from the patent, because the authorized sale of the lens blanks exhausted the patentee's rights despite what the licenses said. In other words, this Court held that exhaustion nullified what was indisputably the contractual intent of the parties. The only difference here is that the parties' contractual intent to defeat exhaustion is far less clear than in *Univis Lens*.

6. Respondent relies on other inapposite principles. Its elaborate discussion of the terms of the Intel-LGE agreements can establish, at most, that they do not convey an "implied license" to Petitioners—and is thus irrelevant. The relevant (and undisputed) point is that Intel's sales to Petitioners were authorized and not a breach of its license.

Respondent implies that it matters that Intel's chips do not themselves infringe the subject patents. Neither did the lens blanks in *Univis Lens*. Nonetheless this Court held that sale of an article exhausts any patents covering its only reasonable use. Respondent's suggestion (Opp. 11 n.7) that these chips have non-infringing uses is inconsistent with the district court's findings, undisturbed by the Federal Circuit.

Respondent invokes the rule that a patentee may sue both a manufacturer and its customers for infringement, so long as it does not recover duplicative damages. Opp. 24-25. The point of the exhaustion doctrine is that, as a matter of

law, the patentee "in the act of sale receive[s] all the royalty or consideration which he claims for the use of his invention in that particular machine or instrument." *Adams*, 84 U.S. at 456. Any royalties the patentee attempts to collect after that are "duplicative" and an improper attempt to expand the patent monopoly, by definition. Respondent's protest that the price it negotiated from Intel is not the full value of the patent (Opp. 27-28) is quibbling with its own bargain.

Respondent also asserts that the Federal Circuit held, or that Petitioners have conceded, that all of the sales here occurred after the notices were received. That is incorrect, although Petitioners will accept Respondent's concession that it now will not seek infringement damages relating to any pre-notice purchases. Petitioners' point was not that there is any distinction between the pre-notice and post-notice sales (the notice is a legal nullity), but simply that the appearance of the notice out of the blue, after Petitioners had been buying from Intel for years, disproves the idea that the prices they paid reflected this purported limitation.

Regardless, Respondent concedes that the Federal Circuit's reasoning cannot be limited to buyers with notice. Opp. 19-20. In its view, a patentee can license someone to make and sell the patented good in the marketplace but, by putting a disclaimer in that non-public license agreement that no "implied license" for purchasers is intended, reserve the right to sue unwitting purchasers for infringement even if they had no notice of the limitation. As *amicus* Minebea Co. points out, this decision is already interpreted that way.

7. Respondent's arguments about method patents (Opp. 23-24 n.11) are inconsistent with *Univis Lens*. Pet. 21. One of the patents held to be exhausted in *Univis Lens* was a pure method patent. The question presented clearly encompasses this issue, and it independently merits review. If sale of an article exhausted device patents but not method patents covering the only reasonable use of the article, then the exhaustion doctrine would be a dead letter.

8. Exhaustion issues are important and frequently litigated. Since this petition's filing, the Federal Circuit has

decided two more cases involving exhaustion arguments. *See Fuji Photo Film Co. v. ITC*, 474 F.3d 1281 (Fed. Cir. Jan. 11, 2007); *RFR Indus. v. Century Steps, Inc.*, Nos. 2005-1610, 2006-1285, 2007 U.S. App. LEXIS 3382 (Fed. Cir. Feb. 16, 2007). Respondent concedes the "prevalence of licensing restrictions in the marketplace" in the one area (software) where "license" restrictions on sold goods are consistent with this Court's cases. Opp. 16. (It notably does not acknowledge or respond to the petition's explanation of why software is unique.) The only reason such restrictions have not spread more widely through the economy yet is the common understanding, rooted in a century of this Court's case law, that chattels cannot be sold with "notices," backed up by threat of infringement suits, purporting to restrict their use or resale. Until now the *Mallinckrodt* line of cases has been thought to apply only to "enforceable contractual restrictions," which limited the opportunity for strategic behavior by patentees. But patent trolls will not miss this opportunity now. The prevalence of licensing restrictions in the software context also makes it clear that the wider business community will impose use and resale restrictions on sold physical goods now that the Federal Circuit has held that the same rules apply.

This is a straightforward legal question turning on the proper interpretation of this Court's cases, on which no further percolation is possible, with the potential to wreak havoc on the efficient transfer of technology, and involving billions of dollars in controversy in this case alone. The interlocutory posture is no reason to defer review. The Federal Circuit has decided the issue of national importance, and Respondent concedes that exhaustion would resolve all claims under 4 of the 5 patents. An interlocutory posture is "no impediment to certiorari where the opinion of the court below has decided an important issue, otherwise worthy of review, and Supreme Court intervention may . . . hasten or finally resolve the litigation." Stern, *supra* n.1, at § 4.18.

CONCLUSION

The petition for certiorari should be granted.

Respectfully submitted,

TERRENCE D. GARNETT
VINCENT K. YIP
PETER WIED
PAUL, HASTINGS, JANOFSKY
& WALKER LLP
515 SOUTH FLOWER STREET
25TH FLOOR
LOS ANGELES, CA 90071
(213) 683-6000
Counsel for Quanta Computer, Inc., Quanta Computer USA, Inc., Q-Lity Computer, Inc.

MAUREEN E. MAHONEY
Counsel of Record
J. SCOTT BALLENGER
ANNE W. ROBINSON
LATHAM & WATKINS LLP
555 11TH STREET N.W.
SUITE 1000
WASHINGTON, D.C. 20004
(202) 637-2200
Counsel for Petitioners

MAXWELL A. FOX
PAUL, HASTINGS, JANOFSKY
& WALKER LLP
34 F ARK MORI BUILDING
P.O. BOX 577
12-32 AKASAKA 1-CHOME
MINATO-KU, TOKYO 107-6034
JAPAN
813 6229 6100
Counsel for Quanta Computer, Inc., Quanta Computer USA, Inc., Q-Lity Computer, Inc.

WILLIAM J. ANTHONY, JR.
ERIC L. WESENBERG
KAI TSENG
MATTHEW J. HULT
ROWENA Y. YOUNG
ORRICK, HERRINGTON
& SUTCLIFFE LLP
1000 MARSH ROAD
MENLO PARK, CA 94025
(650) 614-7400
Counsel for Compal Electronics, Inc., Bizcom Electronics, Inc., Sceptre Technologies, Inc.

RONALD S. LEMIEUX
PAUL, HASTINGS, JANOFSKY
& WALKER LLP
5 PALO ALTO SQUARE
6TH FLOOR
PALO ALTO, CA 94306
Counsel for First International Computer, Inc. and First International Computer of America, Inc.

6

FILED
AUG 24 2007
OFFICE OF THE CLERK
SUPREME COURT, U.S.

No. 06-937

In the Supreme Court of the United States

QUANTA COMPUTER, INC., ET AL., PETITIONERS

v.

LG ELECTRONICS, INC.

ON PETITION FOR A WRIT OF CERTIORARI TO THE UNITED STATES COURT OF APPEALS FOR THE FEDERAL CIRCUIT

BRIEF FOR THE UNITED STATES AS AMICUS CURIAE

PAUL D. CLEMENT
Solicitor General
Counsel of Record
PETER D. KEISLER
THOMAS O. BARNETT
Assistant Attorneys General
THOMAS G. HUNGAR
Deputy Solicitor General
GERALD F. MASOUDI
Deputy Assistant Attorney General
DEANNE E. MAYNARD
Assistant to the Solicitor General
SCOTT R. MCINTOSH
DAVID SEIDMAN
MARK R. FREEMAN
Attorneys
Department of Justice
Washington, D.C. 20530-0001
(202) 514-2217

JAMES A. TOUPIN
General Counsel
STEPHEN WALSH
Acting Solicitor
SHANNON M. HANSEN
HEATHER F. AUYANG
Associate Solicitors
United States Patent and Trademark Office
Alexandria, VA 22314

QUESTION PRESENTED

Whether a patentee's federal patent rights are exhausted by a licensee's authorized sale of an essential component that has no reasonable use other than in practicing the patented invention, when the patentee has purported to retain in its licensing agreement the right to pursue patent infringement claims against those who purchase the component from the licensee and use it for its only reasonable use.

TABLE OF CONTENTS

Page

Statement 1
Discussion 6
I. The first-sale doctrine has evolved in the Federal Circuit in a manner that appears to conflict with this Court's cases 6
A. Under this Court's cases, the patent-exhaustion doctrine delimits the exclusive rights granted by the patent law 6
B. Under the Federal Circuit's cases, the patent-exhaustion doctrine is subject to express modification 14
II. The issue presented is an important one 17
III. This case is an adequate vehicle for clarifying the patent-exhaustion doctrine 19
Conclusion 20

TABLE OF AUTHORITIES

Cases:

Adams v. *Burke*, 84 U.S. (17 Wall.) 453 (1873) 7, 8, 16
Aro Mfg. Co. v. *Convertible Top Replacement Co.*, 377 U.S. 476 (1964) 7, 20
B. Braun Med., Inc. v. *Abbott Labs.*, 124 F.3d 1419 (Fed. Cir. 1997) 5, 14
Bandag, Inc. v. *Al Bolser's Tire Stores, Inc.*, 750 F.2d 903 (Fed. Cir. 1984) 4
Bement v. *National Harrow Co.*, 186 U.S. 70 (1902) 12
Bloomer v. *McQuewan*, 55 U.S. (14 How.) 539 (1853) ..... *passim*
Boesch v. *Graff*, 133 U.S. 697 (1890) 8

Cases–Continued: Page

Bragdon v. *Abbott*, 524 U.S. 624 (1998) 10
Chaffee v. *Boston Belting Co.*, 63 U.S. (22 How.) 217 (1859) 16
Dawson Chem. Co. v. *Rohm & Haas Co.*, 448 U.S. 176 (1980) 17, 20
Deepsouth Packing Co. v. *Laitram Corp.*, 406 U.S. 518 (1972) 10
Dr. Miles Med. Co. v. *John D. Park & Sons Co.*, 220 U.S. 373 (1911), overruled by *Leegin Creative Leather Prods., Inc.* v. *PSKS, Inc.*, 127 S. Ct. 2705 (2007) 11
General Talking Pictures Corp. v. *Western Elec. Co.*, 305 U.S. 124 (1938) 12, 14
Glass Equip. Dev., Inc. v. *Besten, Inc.*, 174 F.3d 1337 (Fed. Cir. 1999) 4
Harkness v. *Russell*, 118 U.S. 663 (1886) 16
Henry v. *A.B. Dick Co.*, 224 U.S. 1 (1912), overruled by *Motion Picture Patents Co.* v. *Universal Film Mfg. Co.*, 243 U.S. 502 (1917) 10
Hobbie v. *Jennison*, 149 U.S. 355 (1893) 7, 9, 16
Keeler v. *Standard Folding Bed Co.*, 157 U.S. 659 (1895) 7, 9, 10, 16, 17
Leegin Creative Leather Prods., Inc. v. *PSKS, Inc.*, 127 S. Ct. 2705 (2007) 11
Mallinckrodt, Inc. v. *Medipart, Inc.*, 976 F.2d 700 (Fed. Cir. 1992) 14, 15
Merrill Lynch, Pierce, Fenner & Smith, Inc. v. *Dabit*, 547 U.S. 71 (2006) 10

Cases–Continued: Page

Mitchell v. *Hawley*, 83 U.S. (16 Wall.) 544 (1873) 9, 10, 12, 14, 16
Motion Picture Patents Co. v. *Universal Film Mfg. Co.*, 243 U.S. 502 (1917) 7, 8, 10, 16, 18
United States v. *General Elec. Co.*, 272 U.S. 476 (1926) 7, 12, 13, 17
United States v. *Univis Lens Co.*, 316 U.S. 241 (1942) ..... *passim*

Statutes:

35 U.S.C. 154(a) 6
35 U.S.C. 271(a) 6, 8
35 U.S.C. 271(d) 20
35 U.S.C. 271(d)(2) 20

Miscellaneous:

S. Rep. No. 1979, 82d Cong., 2d Sess. (1952) 10

In the Supreme Court of the United States

No. 06-937

QUANTA COMPUTER, INC., ET AL., PETITIONERS

v.

LG ELECTRONICS, INC.

ON PETITION FOR A WRIT OF CERTIORARI TO THE UNITED STATES COURT OF APPEALS FOR THE FEDERAL CIRCUIT

BRIEF FOR THE UNITED STATES AS AMICUS CURIAE

This brief is submitted in response to the Court's order inviting the Solicitor General to express the views of the United States. In the view of the United States, the petition for a writ of certiorari should be granted.

STATEMENT

1. Respondent owns several patents that relate to systems and methods for receiving and transmitting data in computer systems. Pet. App. 2a. Petitioners are computer manufacturers who build computer systems by combining computer parts with specialized microprocessors and chipsets purchased from Intel Corporation. *Id.* at 2a, 29a-30a. Intel is authorized by a cross-license agreement (License) with respondent to manufacture, and to sell to petitioners, those specialized components, which are essential to respondent's patented invention. *Id.* at 2a-3a, 29a-30a, 55a.

According to the parties and the courts below, the License authorizes Intel to "make, use, sell (directly or indirectly), offer to sell, import and otherwise dispose of all Intel Licensed Products." Pet. App. 33a (citation

omitted).[1] The License expressly disclaims any express or implied license for acts of infringement that may occur when a third party—such as petitioners—combines Intel components with non-Intel products or components. Br. in Opp. 4-5 (citing License § 3.8). A contemporaneous Master Agreement that incorporates the License by reference also provides: "[respondent] and Intel intend and acknowledge that [respondent's] grant of a license to Intel for Integrated Circuits . . . shall not create any express or implied license under [respondent's] patents to computer system makers that combine Intel Integrated Circuits with other non-Intel components to manufacture motherboards, computer subsystems, and desktop, notebook and server computers." *Id.* at 6 (quoting Master Agreement § 2). The License, however, also states: "Notwithstanding anything to the contrary in this Agreement, the parties agree that nothing herein shall in any way limit or alter the effect of patent exhaustion that would otherwise apply when a party hereto sells any of its Licensed Products." *Id.* at 5 (quoting License § 3.8) (emphasis omitted).

The Master Agreement provides that Intel will send a notice to its customers stating, in pertinent part, that Intel has a "broad patent license" from respondent that "ensures that any Intel product that you purchase is licensed by [respondent] and thus does not infringe any patent held by [respondent]." Br. in Opp. 7 (quoting C.A. App. 3632). The notice further states: "*Please note however that while the patent license that [respondent] granted to Intel covers Intel's products, it does not ex-*

[1] Apart from the portions quoted in the opinions and by the parties, the provisions of the License and a contemporaneous Master Agreement between Intel and respondent are confidential. See Br. in Opp. 4 n.1. The United States does not have access to those agreements.

tend, expressly or by implication, to any product that you may make by combining an Intel product with any non-Intel product." *Ibid.* (citation omitted). It is undisputed that petitioners received that notice from Intel before purchasing some of the components at issue. See *ibid.*; Reply Br. 9.

2. Respondent filed this suit for patent infringement against petitioners. Pet. App. 30a. Respondent did "not contend that the Intel microprocessors and chipsets, alone, infringe any of the patents at issue." *Ibid.* Rather, it alleged that "the licensed Intel products meet many of the limitations of the patents and, when combined with other components in the accused devices, infringe five of its patents." *Ibid.* Petitioners moved for summary judgment on the ground that respondent's claims "are barred to the extent the alleged infringement depends upon the authorized use of a licensed Intel component for its intended and sole purpose." *Ibid.*

3. Relying on this Court's decision in *United States* v. *Univis Lens Co.*, 316 U.S. 241 (1942), the district court held that respondent's patent claims were exhausted. Pet. App. 26a-51a. The court concluded that, having "licensed to Intel the right to practice [its] patents and sell products embodying its patents," respondent could not assert an infringement claim "against those who legitimately purchase and use the Intel microprocessor and chipset." *Id.* at 33a. In so concluding, the court emphasized that the components that petitioners purchase from Intel were essential to respondent's patented invention and have no reasonable use that does not practice respondent's patents. *Id.* at 32a-49a; see *id.* at 55a.

In a subsequent order (Pet. App. 52a-61a), the district court rejected respondent's argument that the patent-exhaustion doctrine did not apply because Intel's sales to petitioners were "not unconditional" in that Intel "expressly informed [petitioners] that their purchase of components from Intel did not grant them a license to infringe [respondent's] patents." *Id.* at 58a. The district court reasoned that, notwithstanding that notice, petitioners' purchase was "unconditional, in that [petitioners'] purchase * * * was in no way conditioned on their agreement not to combine the Intel microprocessors and chipsets with other non-Intel parts and then sell the resultant products." *Ibid.*

The district court also held, however, that the *method* claims in respondent's patents were not subject to exhaustion. Pet. App. 60a (citing *Glass Equip. Dev., Inc.* v. *Besten, Inc.*, 174 F.3d 1337, 1341 n.1 (Fed. Cir. 1999), and *Bandag, Inc.* v. *Al Bolser's Tire Stores, Inc.*, 750 F.2d 903, 924 (Fed. Cir. 1984)). The district court further held that petitioners did not acquire an implied license to practice respondent's claimed invention. The court reasoned that "the circumstances do not plainly indicate that a license was implied, because Intel expressly disclaimed the existence of such a license." *Id.* at 61a.

The court construed the remaining patent claims and granted summary judgment of non-infringement to petitioners. See Pet. App. 62a-81a; Br. in Opp. 9 n.5.

4. The court of appeals affirmed in part, reversed in part, and vacated in part. Pet. App. 1a-25a. The court reversed the district court's judgment that respondent's system claims were exhausted. In so doing, the court reasoned that the doctrine of patent exhaustion is triggered only by an "unconditional" sale because, in such a

transaction, the patentee "has bargained for, and received, an amount equal to the full value of the goods." *Id.* at 4a-5a (quoting *B. Braun Med., Inc.* v. *Abbott Labs.*, 124 F.3d 1419, 1426 (Fed. Cir. 1997)). By contrast, in an "expressly conditional sale or license," the court explained, "it is more reasonable to infer that the parties negotiated a price that reflects only the value of the 'use' rights conferred by the patentee." *Id.* at 5a (quoting *B. Braun Med., Inc.*, 124 F.3d at 1426).

Here, the court concluded that Intel's sales of microprocessors and chipsets to petitioners were "conditional." Pet. App. 6a. The court pointed to respondent's license agreement with Intel, which "expressly disclaims granting a license allowing computer system manufacturers to combine Intel's licensed parts with other non-Intel components" and "required Intel to notify its customers of the limited scope of the license, which it did." *Ibid.* Thus, the court concluded that, "[a]lthough Intel was free to sell its microprocessors and chipsets, those sales were conditional, and Intel's customers were expressly prohibited from infringing [respondent's] combination patents." *Ibid.*

The court affirmed the district court's holding that respondent's method claims were not exhausted. Pet. App. 6a. The court reasoned that, even if the exhaustion doctrine applies to method claims, there was no unconditional sale. *Ibid.* In the alternative, the court held that "the sale of a device does not exhaust a patentee's rights in its method claims." *Ibid.*

Finally, the court vacated in most respects the district court's determination of non-infringement and remanded. Pet. App. 6a-25a. A jury trial is scheduled for January 2008. See No. 4:01-cv-01375-CW, Docket entry No. 992 (N.D. Cal. Dec. 27, 2006).

DISCUSSION

The doctrine of patent exhaustion, also known as the first-sale doctrine, implicates fundamental questions concerning the scope of the exclusive rights conferred under the patent laws. Since this Court last squarely addressed the doctrine in *United States* v. *Univis Lens Co.*, 316 U.S. 241 (1942), the doctrine has evolved in the Federal Circuit in a manner that appears to conflict with this Court's patent-exhaustion cases, thereby creating uncertainty as to when a patentee may enforce, through federal-court actions for patent infringement (as opposed to state-law contract actions), downstream limitations on purchasers following an authorized sale. Whatever rights a patentee may have to enforce such limitations as a matter of contract, the question whether a patentee may invoke federal patent law to enforce such limitations against authorized purchasers is one of considerable practical importance, and this case presents an adequate vehicle for addressing that question.

I. THE FIRST-SALE DOCTRINE HAS EVOLVED IN THE FEDERAL CIRCUIT IN A MANNER THAT APPEARS TO CONFLICT WITH THIS COURT'S CASES

A. Under This Court's Cases, The Patent-Exhaustion Doctrine Delimits The Exclusive Rights Granted By The Patent Law

1. The patent law grants to the patent holder the "right to exclude others from making, using, offering for sale, or selling the invention." 35 U.S.C. 154(a).[2] Since *Bloomer* v. *McQuewan*, 55 U.S. (14 How.) 539 (1853), this Court repeatedly has made clear that the exclusive

[2] Correspondingly, the patent statute provides that "whoever without authority makes, uses, offers to sell, or sells any patented invention * * * infringes the patent." 35 U.S.C. 271(a).

rights to use or to sell are exhausted, as to a given article embodying the invention, upon the first valid sale of the article in commerce, whether by the patentee itself or by an authorized licensee. *Id.* at 549-550; see, *e.g.*, *Aro Mfg. Co.* v. *Convertible Top Replacement Co.*, 377 U.S. 476, 497 (1964) (plurality opinion); *Univis Lens*, 316 U.S. at 251-252; *Motion Picture Patents Co.* v. *Universal Film Mfg. Co.*, 243 U.S. 502, 508-518 (1917); *Keeler* v. *Standard Folding Bed Co.*, 157 U.S. 659, 666 (1895); *Hobbie* v. *Jennison*, 149 U.S. 355, 361-363 (1893); *Adams* v. *Burke*, 84 U.S. (17 Wall.) 453, 456 (1873). Thus, under this Court's cases, a patentee who sells a machine embodying the invention (either directly or through an authorized licensee) cannot bring a patent infringement suit against the purchasers for using the machine for its only reasonable use or for reselling the machine to others. See, *e.g.*, *Univis Lens*, 316 U.S. at 250-252; *Motion Picture Patents*, 243 U.S. at 515-518; *Keeler*, 157 U.S. at 666; *McQuewan*, 55 U.S. (14 How.) at 549-550; *Adams*, 84 U.S. (17 Wall.) at 456. Instead, the enforceability of downstream limitations after an authorized sale would arise "as a question of contract, and not as one under the inherent meaning and effect of the patent laws." *Keeler*, 157 U.S. at 666; accord, *e.g.*, *Motion Picture Patents*, 243 U.S. at 509, 513; *McQuewan*, 55 U.S. (14 How.) at 549-550.

This Court's cases treat the first-sale doctrine as delimiting the exclusive rights afforded the patentee by the patent laws. As the Court has explained, "when the machine passes to the hands of the purchaser," it "passes outside" the scope of the patentee's rights, "and is no longer under the protection of the act of Congress." *McQuewan*, 55 U.S. (14 How.) at 549. Accord, *e.g.*, *United States* v. *General Elec. Co.*, 272 U.S. 476, 489

(1926); *Adams*, 84 U.S. (17 Wall.) at 456. In effect, under this Court's cases, an authorized sale of a patented article grants an implied-in-law license under the patent laws to practice the patent. See 35 U.S.C. 271(a) (use of a patented invention "without authority" constitutes infringement). As *Adams* explained, this Court's first-sale cases rest on the principle that "the sale by a person who has the full right to make, sell, and use such a machine *carries with it* the right to the use of that machine to the full extent to which it can be used." 84 U.S. (17 Wall.) at 455 (emphasis added); *Univis Lens*, 316 U.S. at 249 (observing that an authorized sale is "both a complete transfer of ownership * * * and a license to practice" the patented invention).[3]

The Court draws this limitation from the language of the statute: "all that [the patentee] obtains by the patent" is "the right to exclude every one from making, using, or vending the thing patented, without the permission of the patentee." *McQuewan*, 55 U.S. (14 How.) at 549; see, *e.g.*, *Motion Picture Patents*, 243 U.S. at 516. The Court has reasoned that once a patentee (or one with authority to convey title validly) parts with title to a machine embodying his patented invention, he has exercised his exclusive right to sell under the patent statute. After an authorized sale, a patentee is in no different position than any inventor, with or without a patent, who lawfully passes title to a machine embodying his invention. *McQuewan*, 55 U.S. (14 How.) at 549. That is so, the Court has explained, because—unlike a li-

---

[3] The Court has made clear, however, that a permissible sale under a foreign patent in that foreign country does not exhaust the patent rights under the corresponding United States patent, even if both patents are owned by the same patentee. See *Boesch* v. *Graff*, 133 U.S. 697 (1890).

censee who exercises a portion of the patentee's exclusive rights—one who purchases a patented article "for the purpose of using it in the ordinary pursuits of life * * * exercises no rights created by the act of Congress, nor does he derive title to [the machine] by virtue of the franchise or exclusive privilege granted to the patentee." *Ibid.* Thus, once the patentee parts with title through an authorized sale, "[c]omplete title to the implement or machine purchased becomes vested in the vendee by the sale and purchase," *Mitchell* v. *Hawley*, 83 U.S. (16 Wall.) 544, 548 (1873), and the purchaser "becomes possessed of an absolute property in such articles, unrestricted in time or place," at least with respect to the patent laws. *Keeler*, 157 U.S. at 666.

This Court's cases also reflect that "the purpose of the patent law is fulfilled with respect to any particular article when the patentee has received his reward for the use of his invention by the sale of the article, and * * * once that purpose is realized the patent law affords no basis for restraining the use and enjoyment of the thing sold." *Univis Lens*, 316 U.S. at 251. Under this Court's cases, the reward to which a patentee is entitled for a "machine or instrument whose sole value is in its use" is the compensation for which he (or one acting with his authority) first parts with title. *Hobbie*, 149 U.S. at 362. That is so because once the patentee has parted with title to a machine embodying his invention, he has no further rights under the patent laws in that machine. As this Court has explained, "as between the owner of a patent on the one side, and a purchaser of an article made under the patent on the other, the payment of a royalty once, or, what is the same thing, the purchase of the article from one authorized by the patentee to sell it, emancipates such article from any fur-

ther subjection to the patent throughout the entire life of the patent." *Keeler*, 157 U.S. at 666.

Congress's re-enactment of the patent laws in 1952 supports this Court's construction of the statute. Acting against the backdrop of almost 100 years of this Court's precedent applying the first-sale doctrine to patent law, Congress made no effort to alter or amend that construction. As this Court has recognized, when "judicial interpretations have settled the meaning of an existing statutory provision, repetition of the same language in a new statute indicates, as a general matter, the intent to incorporate its . . . judicial interpretations as well." *Merrill Lynch, Pierce, Fenner & Smith, Inc.* v. *Dabit*, 547 U.S. 71, 85 (2006) (quoting *Bragdon* v. *Abbott*, 524 U.S. 624, 645 (1998). That presumption is applicable here, where the only change that Congress made in the 1952 amendments to the grant of exclusive rights was to change the text to "'the right to exclude others from making, using, or selling', following language used by the Supreme Court, to render the meaning clearer." S. Rep. No. 1979, 82d Cong., 2d Sess. 23 (1952); see *Deepsouth Packing Co.* v. *Laitram Corp.* 406 U.S. 518, 530 (1972).[4]

---

[4] The lone exception to this Court's treatment of the first-sale doctrine as delimiting the scope of the patent right was the short-lived decision in *Henry* v. *A.B. Dick Co.*, 224 U.S. 1 (1912), which was expressly overruled by *Motion Picture Patents*, 243 U.S. at 518. In allowing a patentee to enforce through the patent laws a restriction that purchasers could use its patented invention only with supplies purchased from the patentee, the *A.B. Dick* Court read this Court's first-sale cases as recognizing only a license implied in *fact* to use the purchased article. 224 U.S. at 24. In so concluding, the *A.B. Dick* Court misread *Mitchell* as involving a conditional sale, see *id.* at 23, when, in fact, *Mitchell* involved an unauthorized sale, see *Mitchell*, 83 U.S. (16 Wall.) at 548-549. See p. 13, *infra*.

The Court's decision in *Univis Lens* confirms that the doctrine delimits the scope of the patent right in a manner that cannot be extended or altered by the parties. In *Univis Lens*, the Court rejected, as a defense to a Sherman Act claim, the argument that the patent statute authorized a maker of eyeglass lens blanks to impose resale price restrictions on finished lenses made with the blanks.[5] The Court reasoned that the sale of the lens blanks by the authorized licensee of the patent holder extinguished the patent holder's authority to control the conduct of downstream retailers. See 316 U.S. at 249-251. The Court so concluded because the lens blanks sold under the license were capable of use only in practicing the patents, and notwithstanding that (in contrast to earlier cases) the product sold with the patent holder's authorization did not infringe until after the sale, when the downstream retailers finished the lens blanks. *Id.* at 248-249; see *id.* at 249 (assuming that "each blank * * * embodies essential features of the patented device and is without utility until it is ground and polished as the finished lens of the patent").

In so holding, the Court reiterated the principle of its earlier cases, observing that "[t]he first vending of any article manufactured under a patent puts the article beyond the reach of the monopoly which that patent confers." *Univis Lens*, 316 U.S. at 252. The Court also reasoned that "[a]n incident to the purchase of any article,

[5] The Court's analysis of the failure of the defendant's patent-law defense survives the demise of the per se ban on resale price maintenance. See *Leegin Creative Leather Prods., Inc.* v. *PSKS, Inc.*, 127 S. Ct. 2705 (2007), overruling *Dr. Miles Med. Co.* v. *John D. Park & Sons Co.*, 220 U.S. 373 (1911). Indeed, the first-sale doctrine continues to play an important role in limiting the scope of the patent defense and thereby allowing courts to apply rule-of-reason analysis to resale price maintenance agreements involving patented goods.

whether patented or unpatented, is the right to use and sell it." *Id.* at 249. Thus, "[s]ale of a lens blank by the patentee or by his licensee is * * * in itself both a complete transfer of ownership of the blank, which is within the protection of the patent law, and a license to practice the final stage of the patent procedure." *Ibid.* The Court plainly understood that "license" to arise as a matter of law by virtue of the sale, because it overrode the patent holder's imposition of explicit limitations purporting to constrain the downstream finishers' right to sell the finished product. See *id.* at 243-246. If the license to which the Court referred amounted to no more than a presumption of authorization that could be rebutted by contrary evidence or agreement of the parties, the Court would not have found exhaustion.

2. In contrast to the Court's consistent rejection of attempts by patentees to place patent-law limitations on use or resale by authorized purchasers, this Court repeatedly has held that a patentee may require mere licensees to comply with any lawful condition to which the parties may agree—including field-of-use restrictions and even minimum price restrictions—on pain of liability for infringement for both the licensee and purchasers with knowledge of the restriction. See, *e.g.*, *General Talking Pictures Corp.* v. *Western Elec. Co.*, 305 U.S. 124, 127 (1938); *General Elec.*, 272 U.S. at 489-490; *Bement* v. *National Harrow Co.*, 186 U.S. 70, 91 (1902); *Mitchell*, 83 U.S. (16 Wall.) at 547-551. The Court bases the distinction between licensees and purchasers on the ground that a licensee enjoys a portion of the patentee's exclusive rights granted by the patent statute. *E.g.*, *id.* at 548; *McQuewan*, 55 U.S. (14 How.) at 549-550. Because the licensee stands in the shoes of the patentee, this Court generally has allowed the pat-

entee to restrict its licensees as if the patentee itself were exercising the exclusive patent rights, as long as the conditions "are normally and reasonably adapted to secure pecuniary reward for the patentee's monopoly." *General Elec.*, 272 U.S. at 490.

Among the restrictions on licensees that the Court has allowed to be enforced through an infringement action is a restriction on a licensee's ability to make an authorized sale. An early example is *Mitchell*, where the patentee had conveyed to the licensee the right "*to license to others the right to use the [patented] machines*," 83 U.S. (16 Wall.) at 548, but not the right to sell the machines, and the license expressly forbade the licensee to "'*in any way, or form, dispose of, sell, or grant* any license to use the said machines beyond the expiration' of the original term." *Id.* at 549 (quoting license). When Congress extended the original patent term, the patent holder brought a patent infringement suit to enjoin the ongoing use of machines that the licensee had purported to sell to the defendant. Notwithstanding the sale by the licensee, *ibid.*, the Court held that the first-sale doctrine did not apply, because the seller "was only a licensee and *never had any power to sell a machine* so as to withdraw it indefinitely from the operation of the franchise secured by the patent." *Id.* at 551 (emphasis added).

More recently, in *General Talking Pictures*, the Court held that when a licensee makes and sells a patented article in violation of the field-of-use terms of its license, "the effect is precisely the same as if no license whatsoever had been granted," and the patentee could sue both the licensee and the purchaser (who was on notice of the restriction) for infringement of the patent. 305 U.S. at 127. In *Univis Lens*, by contrast, where the

sale of the lens blanks was authorized (albeit expressly subject to limitations on resale), the patent-exhaustion doctrine applied, because "the authorized sale of an article which is capable of use only in practicing the patent is a relinquishment of the patent monopoly with respect to the article sold." 316 U.S. at 249. Although there is a seeming anomaly in allowing a patentee to achieve indirectly—through an enforceable condition on the licensee—a limitation on use or resale that the patentee could not itself impose on a direct purchaser, the distinction is a necessary and explicable result of the Court's decision in *General Talking Pictures*.

B. Under The Federal Circuit's Cases, The Patent-Exhaustion Doctrine Is Subject To Express Modification

In the decades since this Court last interpreted the first-sale doctrine, the doctrine has evolved in the Federal Circuit in a manner that appears to depart from this Court's cases. As it has evolved, the Federal Circuit's patent-exhaustion doctrine "does not apply to an expressly conditional sale"—that is, to a sale that is subject to an express limitation on the right to use or to resell the patented invention. See Pet. App. 5a (quoting *B. Braun Med., Inc.* v. *Abbott Labs.*, 124 F.3d 1419, 1426 (Fed. Cir. 1997)).

The foundation of the Federal Circuit's approach to the first-sale doctrine is *Mallinckrodt, Inc.* v. *Medipart, Inc.*, 976 F.2d 700 (1992). In *Mallinckrodt*, the patentee manufactured and sold to hospitals a medical device marked with a "single use only" notice. *Id.* at 701. The devices were in fact capable of reuse, and many hospitals that purchased the devices sent the used products to Medipart for reconditioning. *Ibid.* This Court's cases would appear to treat such a restriction on reuse, like an

express restriction on resale, as unenforceable in an infringement action. The Federal Circuit, however, held that the patentee could enforce the "single use only" notice in an action for patent infringement. *Id.* at 703-709.

In so doing, the court of appeals interpreted this Court's patent-exhaustion cases as establishing only that "price-fixing and tying restrictions accompanying the sale of patented goods were *per se* illegal." *Mallinckrodt,* 976 F.2d at 704. In the court's view, this Court's cases "did not hold, and it did not follow, that all restrictions accompanying the sale of patented goods were deemed illegal." *Ibid.*; see *id.* at 708 ("*Adams* v. *Burke* and its kindred cases do not stand for the proposition that no restriction or condition may be placed upon the sale of a patented article."). The court of appeals emphasized this Court's decision in *General Talking Pictures* and concluded that there was no persuasive basis for holding that "the enforceability of a restriction to a particular use is determined by whether the purchaser acquired the device from a manufacturing licensee or from a manufacturing patentee." *Id.* at 705.

As the decisions in *Mallinckrodt* and this case indicate, the Federal Circuit understands this Court's first-sale decisions as drawing a distinction between "unconditional" and "conditional" sales, with the latter category encompassing any sales subject to restrictions on the right to use or to resell the purchased article. Pet. App. 4a-6a; *Mallinckrodt,* 976 F.2d at 706-708. As a result, under the Federal Circuit's cases, a patentee may attach restrictions on products embodying its patented invention and enforce those restrictions, in actions for patent infringement, against downstream purchasers

even after an authorized sale by the patentee or a licensee (as long as the restrictions are not anticompetitive ones, such as price fixing and tying).

The Federal Circuit's broad understanding of "conditional" sale is not reflected in this Court's cases. This Court did allude to the notion of an "unconditional" sale in *Mitchell*, which observed that the patent right is exhausted when the patentee "has himself constructed a machine and sold it without any conditions, or authorized another to construct, sell, and deliver it * * * without any conditions." 83 U.S. (16 Wall.) at 547; see *Keeler*, 157 U.S. at 663 (quoting the foregoing passage in describing the *Mitchell* decision). But at that time, a "conditional" sale would have been understood as an agreement to sell where title would not convey until performance of a condition precedent. See, *e.g.*, *Harkness* v. *Russell*, 118 U.S. 663, 666 (1886) (describing a "conditional sale" as a "mere agreement to sell upon a condition to be performed" in which title does not pass until the condition precedent is performed).

That narrower understanding of a "conditional" sale is consistent with this Court's other patent-exhaustion cases, which explain that the doctrine is triggered "if a person legally acquires a title to" a patented item (*Chaffee* v. *Boston Belting Co.*, 63 U.S. (22 How.) 217, 223 (1859); when a patented item is "lawfully made and sold" (*Adams*, 84 U.S. (17 Wall.) at 457; *Hobbie*, 149 U.S. at 363) or "passes to the hands of the purchaser" (*McQuewan*, 55 U.S. (14 How.) at 549); or upon "the purchase of the article from one authorized by the patentee to sell it" (*Keeler*, 157 U.S. at 666). See *Univis Lens*, 316 U.S. at 249-251 ("authorized sale" triggered patent-exhaustion doctrine notwithstanding license agreement limiting resale prices); *Motion Picture Patents*, 243 U.S.

at 515-516 (describing as an "unconditional sale" a sale made subject to restrictions on resale price). That understanding is also reflected in the Court's frequent suggestion that whether a patentee can place enforceable downstream restrictions following an authorized sale turns on contract, not patent, law. See, *e.g.*, *Keeler*, 157 U.S. at 666; *McQuewan*, 55 U.S. (14 How.) at 549-550.[6]

II. THE ISSUE PRESENTED IS AN IMPORTANT ONE

The scope of the patent-exhaustion doctrine is an important question warranting this Court's review. Whether, and under what circumstances, patentees can avoid the effects of the first-sale doctrine by agreement or unilateral notice are issues of substantial ongoing practical importance. Since this Court last addressed the doctrine, the Federal Circuit has expanded the circumstances in which a patentee may enforce, in a patent infringement suit, restrictions on a patented article after an authorized sale. That expansion is difficult to reconcile with the reasoning of this Court's cases.

In addition, under the first-sale doctrine as it has evolved in the Federal Circuit, patentees can employ the patent law to extract royalties on articles embodying their invention at multiple downstream points in the

---

[6] The Federal Circuit also has held, as it did here, that method patents are categorically exempt from the operation of the first-sale doctrine. Pet. App. 6a. Although this Court has never directly addressed the question, some of the Court's patent-exhaustion cases have involved method patents without any suggestion that such patents are categorically exempt from the exhaustion doctrine. See, *e.g.*, *Dawson Chem. Co.* v. *Rohm & Haas Co.*, 448 U.S. 176, 186 (1980) (accepting the parties' concession that the patentee's sale of a chemical specially suited for use in a patented process exhausts the patentee's monopoly in the patented process, and citing *Univis Lens* and *Adams*); *General Elec.*, 272 U.S. at 480, 490 (finding no exhaustion).

channels of commerce, even after they have parted (or a licensee has parted in an authorized sale) with title to the article. Such a system could create significant inefficiencies by producing multiple rounds of patent infringement suits. The Federal Circuit's approach also has the potential to erode downstream competition by permitting patentees to avoid antitrust scrutiny of restrictions on the use and resale of products embodying their inventions—restrictions that would be enforceable as a matter of patent law in the Federal Circuit. Moreover, at least since the decision in *Keeler*, this Court has suggested that such an interpretation of the patent laws does not serve the public interest, and that the right to place such downstream restrictions should be resolved as a matter of contract, not patent, law. See 157 U.S. at 666-667; *Motion Picture Patents*, 243 U.S. at 509, 513, 515.

Furthermore, the question here involves more than choice of law or forum questions. To be sure, some of the same restrictions that the first-sale doctrine makes unenforceable in a patent infringement suit could be validly imposed as a matter of state contract law. But even otherwise valid contract provisions would not provide a defense to a federal antitrust action. Moreover, as this case illustrates, the Federal Circuit doctrine appears to allow a patentee such as respondent to enforce limitations on a downstream purchaser with whom the patentee has no direct contractual dealings (and notwithstanding that the agreement appears to impose no direct restrictions on the only party with whom respondent did contract). Whatever the proper interpretation of the scope of the patent right, no one benefits from the uncertainty caused by dissonance between Supreme Court patent precedents and more recent holdings of

the Federal Circuit. The Court could provide much needed guidance by granting review.

III. THIS CASE IS AN ADEQUATE VEHICLE FOR CLARIFYING THE PATENT-EXHAUSTION DOCTRINE

This case presents the Court with an adequate vehicle for clarifying the scope of the doctrine of patent exhaustion. Respondent errs in contending (Br. in Opp. 14-16) that the decision below rests only on the "accepted legal principle" that patentees may place restrictions on sales by licensees, and thus turns on the fact-specific question of the terms of the license between respondent and Intel. The parties do not dispute that respondent authorized Intel to sell the components to petitioners. Pet. App. 29a-30a. That distinguishes the cases involving licensees who made unauthorized sales. The legal dispute is whether, having authorized the sales at issue by imposing no direct restriction on the licensee's ability to sell, a patentee can nonetheless invoke the patent laws to enforce a purported restriction on the purchaser's right to use the article for its only reasonable use. That dispute goes to the heart of the tension between this Court's precedents and the approach taken by the Federal Circuit. Whether respondent could have lawfully achieved the result it sought through a different arrangement, the Federal Circuit allowed it to enforce under the patent laws a restriction on the right to use its patented invention, even after an authorized sale.

To be sure, the question presented in this case arises in a factual context that may not reflect the most common circumstance in which the patent-exhaustion doctrine is implicated. Unlike in *Mallinckrodt*, for example, the question arises here in the context of a licensee sale, and one in which the sale was not of a patented article,

but rather merely a component of the patented systems. And the court of appeals did not address whether, absent what it found to be enforceable conditions on the sale, Intel's authorized sale of the components would exhaust the patents at issue.[7]

In any event, the rationale of the judgment below is that the sale here was a conditional one and that the patentee can impose the limitations at issue notwithstanding the patent-exhaustion doctrine. The propriety of that judgment warrants this Court's review.

CONCLUSION

The petition for a writ of certiorari should be granted.

Respectfully submitted.

---

[7] Read in isolation, and without an understanding of its context and purpose, Section 271(d) of Title 35 might be construed to entitle a patentee in respondent's position to relief. In relevant part, that section provides:

> No patent owner otherwise entitled to relief for infringement or contributory infringement of a patent shall be denied relief or deemed guilty of misuse or illegal extension of the patent right by reason of his having done one or more of the following: * * *
>
> (2) licensed or authorized another to perform acts which if performed without his consent would constitute contributory infringement of the patent.

35 U.S.C. 271(d)(2). Upon analysis, however, the only plausible reading of Section 271(d) is that it addresses the relationship between the doctrines of patent misuse and contributory infringement, not the distinct doctrine of patent exhaustion. See generally *Dawson Chem.*, 448 U.S. at 200-213; *Aro Mfg. Co.*, 377 U.S. at 492. A patentee whose infringement claim is barred by principles of patent exhaustion is not "otherwise entitled to relief," and therefore obtains no benefit from Section 271(d). That presumably explains why neither party has invoked Section 271(d) in this case.

PAUL D. CLEMENT
Solicitor General

PETER D. KEISLER
THOMAS O. BARNETT
Assistant Attorneys General

THOMAS G. HUNGAR
Deputy Solicitor General

GERALD F. MASOUDI
Deputy Assistant Attorney General

DEANNE E. MAYNARD
Assistant to the Solicitor General

SCOTT R. MCINTOSH
DAVID SEIDMAN
MARK R. FREEMAN
Attorneys

JAMES A. TOUPIN
General Counsel

STEPHEN WALSH
Acting Solicitor

SHANNON M. HANSEN
HEATHER F. AUYANG
Associate Solicitors
United States Patent and Trademark Office

AUGUST 2007

06-937
No. 06M54

FILED
MAR 3 - 2007
OFFICE OF THE CLERK
SUPREME COURT, U.S.

IN THE

Supreme Court of the United States

QUANTA COMPUTER, INC., QUANTA COMPUTER USA, INC., Q-LITY COMPUTER, INC., COMPAL ELECTRONICS, INC., BIZCOM ELECTRONICS, INC., SCEPTRE TECHNOLOGIES, INC., FIRST INTERNATIONAL COMPUTER, INC. and FIRST INTERNATIONAL COMPUTER OF AMERICA, INC.,

Petitioners,

—v.—

LG ELECTRONICS, INC.,

Respondent.

ON PETITION FOR A WRIT OF CERTIORARI TO THE UNITED STATES COURT OF APPEALS FOR THE FEDERAL CIRCUIT

BRIEF OF MINEBEA CO., LTD. AS AMICUS CURIAE IN SUPPORT OF PETITIONERS

JOEL E. LUTZKER
Counsel of Record
DAVID H. KAGAN
SCHULTE, ROTH & ZABEL LLP
919 Third Avenue
New York, New York 10022
(212) 756-2000

Counsel for Amicus Curiae Minebea Co., Ltd.

TABLE OF CONTENTS

PAGE

TABLE OF AUTHORITIES iii

IDENTITY AND INTEREST OF AMICUS CURIAE 1

SUMMARY OF ARGUMENT 1

ARGUMENT 5

I. AN UNBROKEN LINE OF THIS COURT'S PRECEDENTS HAS HELD THAT AFTER THE FIRST AUTHORIZED SALE OF A PATENTED ARTICLE, FURTHER ATTEMPTS BY THE PATENTEE TO CONTROL ITS DISPOSITION OR SALE ARE VOID, AND THE ARTICLE TRAVELS THROUGH THE STREAM OF COMMERCE LIKE ANY OTHER STAPLE GOOD, FREE OF THE PATENT 5

II. THE FEDERAL CIRCUIT'S DECISION TO ALLOW LGE TO EXERCISE CONTROL OF THE USE OR RESALE OF A PATENTED ARTICLE FOLLOWING ITS AUTHORIZED SALE VIOLATES THE FIRST SALE DOCTRINE 9

PAGE

A. The Federal Circuit's Decision Is Inconsistent With This Court's Decisions On Patent Exhaustion, Particularly Its Landmark Decision In *U.S. v. Univis Lens Co.* And Thereby Thwarts Vital Safeguards Built Into The Patent Laws 9

B. This Court Has Already Addressed Whether Express Disclaimers And Notice Requirements Can Circumvent the Application Of The First Sale Doctrine 12

C. The Federal Circuit's Decision Has Had Such A Damaging Effect That It Has Resulted In A District Court Finding Of No Exhaustion Based Upon "Implied Conditions" With No "Notice" Requirement 15

III. CONCLUSION 17

TABLE OF AUTHORITIES

Cases: PAGE

Adams v. Burke, 84 U.S. (17 Wall.) 453 (1873) 2, 6, 12, 13

Bloomer v. McQuewan, 55 U.S. (14 How.) 539 (1852) 6

General Talking Pictures Corp. v. Western Electric Co., 305 U.S. 124 (1938) 6

Hobbie v. Jennison, 149 U.S. 355 (1893) 13, 14

Intel v. ULSI Sys. Tech., Inc., 995 F.2d 1566 (Fed. Cir. 1993) 13

Keeler v. Standard Folding Bed Co., 157 U.S. 659 (1895) 2, 14, 16

LG Electronics, Inc. v. Asustek Computer, Inc., No. 01-326, 2002 U.S. Dist. LEXIS 25956, at *12; 65 U.S.P.Q.2D (BNA) 1589 (D. N.Cal. Aug. 20, 2002) 9

LG Electronics, Inc. v. Bizcom Electronics, Inc., 453 F.3d 1364 (Fed. Cir. July 7, 2006) 1, 12

Minebea Co., Ltd. v. Papst, 444 F.Supp.2d 68 (D.D.C. 2006) 1, 14, 15

Minebea Co., Ltd. v. Papst, 374 F.Supp.2d 202 (D.D.C. 2005) 15

Mitchell v. Hawley, 83 U.S. 544 (1873) 6

United States v. Univis Lens Co., 316 U.S. 241 (1942) 2, 3, 7, 8, 10, 11, 12, 14

PAGE

Statute:

U.S. Const. art. I, § 8 cl. 8..... 2

IDENTITY AND INTEREST OF AMICUS CURIAE

Upon consent of the parties,[1] amicus curiae Minebea Co. Ltd., ("Minebea") submits this brief in support of the position of Petitioners. Minebea manufactures, distributes and sells a large range of industrial and electronic products and components into the stream of commerce and is the owner of a significant number of United States patents. Minebea has a direct interest in this appeal based on its role in a lawsuit entitled *Minebea Co., Ltd. v. Papst*, Civil Action No. 97-0590, which was tried before the Honorable Paul F. Friedman, United States District Court Judge for the District of Columbia. In an Opinion, Findings of Fact and Conclusions of Law, dated August 17, 2006, Judge Friedman ruled on the basis of the Federal Circuit's *LGE*[2] decision that a patent license agreement under which Minebea was fully authorized by the patent owner to sell its products did not result in exhaustion. Relying on *LGE*, Judge Friedman ruled that a no sub-license provision in the license created an "implied condition" on Minebea's sales despite the fact that there was no notice provided or required. *Minebea Co., Ltd. v. Papst*, 444 F.Supp.2d 68, 159 (D.D.C. 2006). As a licensor, a licensee, a manufacturer and a litigant, Minebea has an interest in helping to ensure that the patent system operates in a manner which is predictable, fair and consistent with Congressional mandates and opinions of this Court.

[1] Letters evidencing the consent of the parties are being filed currently with the Clerk of the Court.

[2] *LG Elecs., Inc. v. Bizcom Elecs., Inc.*, 453 F.3d 1364 (Fed. Cir. 2006) ("*LGE*").

SUMMARY OF THE ARGUMENT

As recognized by this Court, the patent system must reconcile two fundamental competing interests. On the one hand, it must provide meaningful incentives to innovation in keeping with the constitutional mandate of promoting the progress of the useful arts. (U.S. Const. art. I, § 8 cl. 8). On the other hand, this Court has long recognized that overexpansion of private patent monopolies must be prevented so that benefits to innovation derived through the free market process of open competition are not sacrificed. For over one hundred years, this Court has recognized the first sale doctrine as a basic limitation on the rights granted under a patent in order to ensure that patent owners do not suppress competition through the control of patented goods after an authorized first sale.

The first sale doctrine provides that once a patentee has authorized the sale into commerce of any article which practices his invention or embodies the "essential features"[3] of his invention, the patent is exhausted. After this authorized first sale, the article is "emancipated"[4] from the subjugation of the patent, and continues thereafter through the stream of commerce in the same manner as any unpatented article, free of the patent owner's exclusionary rights or control. This first sale doctrine is so deeply embedded in the patent laws of this Nation that it has been described by this Court as necessary to prevent "inconvenience and annoyance to the public . . . too obvious to require illustration." *Keeler* at 654.

Since the time that the first sale doctrine was first articulated in *Adams v. Burke*, 84 U.S. (17 Wall.) 453

---

[3] *United States v. Univis Lens Co.*, 316 U.S. 241, 251 (1942).

[4] *Keeler v. Standard Folding Bed Co.*, 157 U.S. 659, 654 (1895).

(1873), patent owners have presented arguments and devised licensing strategies in an attempt to circumvent the inherent and necessary limitation on their power that it imposes. In each instance, those efforts have been rejected by this Court. As many of the cases in this rich history make clear, the first sale doctrine acts as an immutable limitation on the power of a patent owner to control the disposition or sale of an article after a first authorized sale that cannot be undone through express disclaimers or by requiring that each licensee in the chain send a "notice" to subsequent purchasers of the article that no license is implied.

Of particular note is this Court's decision in *Univis*. That case stands on all fours with the salient facts in *LGE* and prohibited the very conduct in which LGE is now free to engage. Indeed, in *Univis*, this Court expressly rejected the patentee's argument that express disclaimers constitute "conditional licenses" which do not trigger the exhaustion doctrine. *Univis* at 245.[5] Yet the Federal Circuit's opinion completely ignores that landmark decision, apparently on the grounds that it is "an antitrust case,"[6] and fails to even once mention

[5] Counsel for Univis Lens argued that "[t]he supply by the wholesaler grinder of a ground or partly ground lens under a restrictive license to a prescription licensee does not release the article from the patent monopoly. These are valid restrictive licenses limited to different fields." *Univis* at 245.

[6] At oral argument before the Federal Circuit, the following exchange occurred between counsel for Quanta and Judge Newman:

> Quanta's Counsel: We would urge upon this Court a construction of exhaustion that looks to the Constitution in the first place, Article I, Section 1, Clause 8 because in the *Univis* case the Supreme Court looked particularly to that portion of the Constitution and said there is a bundle of rights given to patentees and that bundle of rights includes making, using and vending and the suggestion is that the full extent of that patentees

Univis. Conversely, the district court relied heavily on *Univis* in finding exhaustion did apply in the face of LGE's licensing scheme. By ignoring the teachings of *Univis* as well as other exhaustion decisions of this Court, the Federal Circuit has authorized LGE to control the first sale of an article (the sale of microprocessors by Intel to its customers), as LGE is entitled under the patent laws, as well as a subsequent use and sale (the sale by the computer makers to the public)—in direct violation of the first sale doctrine.

The Federal Circuit's decision will have a deleterious effect on competition throughout the economy. Patent owners will now be permitted to extract a "patent tax" at each stage of the manufacture, assembly, importation, sale and use of an individual patented article. As technology becomes increasingly complex, products such as automobiles, computers, televisions, etc. are comprised of many hundreds or thousands of subcomponents. If each of these components can be "taxed" multiple times by an individual patent owner each time a component is combined with another component to make a sub-assembly or complete a product, the patent system will become seriously out of balance.

The corporations or other entities that own patents directed to each individual component will be able to

---

rights end there, so once there is a vending under operation of the Constitution vending the rights are exhausted so we think that exhaustion.

Judge Newman: No but we know that it's not that broad. We know that there is freedom of contract we know that *Univis* was an antitrust resale price control case primarily not a matter of saying that there is an absolute right for everyone to use for every purpose anything that they acquire on the market so we know that that's not the case.

(A recording of the argument before the Federal Circuit was procured from the clerk of the Federal Circuit.)

reap a reward when they authorize the manufacture and sale of the component itself. Each patentee will then be authorized to reap a second reward when the component is combined with other components to create a useful product. An additional royalty could then be reaped when the completed article is sold to a distributor or store. And even a fifth royalty could be extracted when the product is eventually sold by a retailer or used by the public. At each successive stage in the manufacture and sale of the completed product, the patentee's demanded "reward" may actually go up based upon the successively enhanced price of the article as it progresses through the distribution chain.

ARGUMENT

I AN UNBROKEN LINE OF PRECEDENTS OF THIS COURT HAS HELD THAT AFTER THE FIRST AUTHORIZED SALE OF A PATENTED ARTICLE, FURTHER ATTEMPTS BY THE PATENTEE TO CONTROL ITS DISPOSITION OR SALE ARE VOID, AND THE ARTICLE TRAVELS THROUGH THE STREAM OF COMMERCE LIKE ANY OTHER STAPLE GOOD, FREE OF THE PATENT

The patent exhaustion doctrine was articulated by the Court over a century ago in *Adams*, widely regarded as the seminal case on this topic. Adams, the owner of a patent on coffin lids, granted rights to Lockhart to make, use, and sell patented coffin lids within a ten-mile radius from the center of Boston, Massachusetts. Burke, an undertaker, bought several coffins from Lockhart in Boston which included the coffin lids that Lockhart was authorized to sell. Burke then used the coffins in Natick, Massachusetts, seventeen miles from Boston's center. Adams sued Burke for patent infringement. This Court

affirmed the district court's dismissal of the patentee's infringement case against Burke as follows:

> In the essential nature of things, when the patentee, or the person having his rights, sells a machine or instrument whose sole value is its use, he receives the consideration for its use and he parts with the right to restrict that use. The article, in the language of the court, passes without the limit of the monopoly. That is to say, the patentee or his assignee having in the act of sale received all the royalty or consideration which he claims for the use of his invention in that particular machine or instrument, it is open to the use of the purchaser without further restriction on account of the monopoly of the patentees.

Adams at 456.

Thus, *Adams*, as well as the subsequent exhaustion decisions by this Court make clear that exhaustion acts as an inherent and strict limitation on the power of the patentee to control a patented article after a first sale. This limitation applies even where, as in *Adams*, the subsequent use or disposition was something that the licensee itself was not authorized to do, so long as the licensee's sale itself was authorized and unconditional. As stated by Chief Justice Taney in *Bloomer v. McQuewan*, 55 U.S. (14 How.) 539, 549 (1852) when the patented article "passes to the hands of the purchaser, it is no longer within the limits of the monopoly. It passes outside of it, and is no longer under the protection of the act of Congress."[7]

[7] *Mitchell v. Hawley*, 83 U.S. 544 (1873) is not to the contrary. Although in *Mitchell*, a post sale restriction was found to be permissible, the licensee in *Mitchell* did not have authority to sell and therefore there was no authorized first sale to trigger exhaustion. *See General Talking Pictures Corp. v. Western Electric Co.*, 305 U.S. 124, 128 n.1 (1938) ("It is significant that in the Hawley Case the patentee never licensed or transferred his exclusive right to sell; and the

The patent exhaustion doctrine was last squarely addressed by this Court in *Univis*, which again reiterates this Court's unyielding principle that exhaustion acts to limit the power of a patentee to control the disposition of a patented article after the first sale as follows:

> Our decisions have uniformly recognized that the purpose of the patent law is fulfilled with respect to any particular article when the patentee has received his reward for the use of his invention by the sale of the article, and that once that purpose is realized the patent law affords no basis for restraining the use and enjoyment of the thing sold. *Adams v. Burke*, supra, page 456; *Keeler v. Standard Folding Bed Co.*, 157 U.S. 659; *Motion Picture Co. v. Universal Film Co.*, 243 U.S. 502; and see cases collected in *General Talking Pictures Corp. v. Western Electric Co.*, 305 U.S. 124, 128, n.1.

Univis at 251.

In *Univis*, the patentee, Univis Corp., held a patent having claims directed to an eyeglass lens and the method for making the lens by producing, grinding and polishing lens blanks. *Univis* at 243. Univis Corp. licensed its related company, Univis Lens, to manufacture lens blanks. Univis Lens sold those licensed blanks to wholesalers and retailers. *Univis* at 244-45. After purchasing the Univis Lens blanks, these wholesalers and retailers would finish the grinding and polishing of the lens blanks through practice of the Univis Corp.'s method patent. *Id.*

---

license conveyed only 'the exclusive right to make and use' and to license to others the right to use . . . .' 16 Wall. at page 548, 21 L.Ed. 322. That case, therefore, does not justify the judgment here where the patentee's power to vend was both transferred and exercised.") (Black, H., dissenting) (emphasis added).

The licenses to the wholesalers and retailers contained strict disclaimers and limitations on the rights granted by Univis Corp. to the individual licensees. One of the main issues before this Court was whether the patent laws permitted a patentee to prevent a purchaser of a licensed product (the lens blanks) from engaging in the steps necessary to complete and sell the finished product. In addressing the patent owner's ability under the patent laws to exercise control over a product after a first sale, this Court held:

> We think that . . . where one has sold an uncompleted article which, because it embodies essential features of his patented invention, is within the protection of his patent, and has destined the article to be finished by the purchaser in conformity with the patent, he has sold his invention so far as it is or may be embodied in that particular article.

Univis at 250-51.

Accordingly, this Court held that since the unfinished lens blanks were sold under license from Univis Corp., and since the blanks had no use except in practice of Univis Corp.'s patent, the patent rights with respect to the lens blanks and their use as a finished product were exhausted on sale:

> [T]he authorized sale of an article which is capable of use only in practicing the patent is a relinquishment of the patent monopoly with respect to the article sold.

Univis at 249.

II THE FEDERAL CIRCUIT'S DECISION TO ALLOW LGE TO EXERCISE CONTROL OVER THE USE OR RESALE OF THE PATENTED ARTICLE FOLLOWING ITS FIRST AUTHORIZED SALE, VIOLATES THE FIRST SALE DOCTRINE

A. The Federal Circuit's Decision Is Inconsistent With This Court's Exhaustion Decisions, Particularly Its Landmark Decision In *Univis* And Thereby Thwarts Vital Safeguards Built Into The Patent Law

The facts regarding LGE's licensing scheme are not in dispute. LGE has acquired patents that are directed to certain microprocessors in combination with generic components such as busses and memory. (Petr.'s Br. 1). LGE then licensed the LGE patents to Intel under the LGE-Intel license under which "Intel was free to sell its microprocessors and chipsets."[8] The microprocessors that Intel has been authorized to sell to its customers embody the essential features of the LGE patents since the district court determined that the Intel microprocessors have no non-infringing use. *Id.* at 39. After authorizing Intel to manufacture and sell microprocessors in exchange for royalty payments, LGE then demanded an additional royalty from Intel's customers when the Intel microprocessors they had purchased were combined with busses and memory to create useful devices that were then sold to the public in computers. (Petr.'s Br. 3).

---

[8] "(LGE-Intel License) §§ 1.13, 1.6, 1.24 (chipsets and microprocessors are Intel Licensed Products within the meaning of the agreement). The [LGE-Intel] License authorizes Intel to 'make, use, sell (directly or indirectly), offer to sell, import and otherwise dispose of all Intel Licensed products'." *LG Electronics, Inc. v. Asustek Computer, Inc.*, No. 01-326, 2002 U.S. Dist. LEXIS 25956, at *12; 65 U.S.P.Q.2D (BNA) 1589 (D. N.Cal. Aug. 20, 2002).

The Federal Circuit's decision permits LGE to accomplish that which courts for over one hundred years have steadfastly maintained cannot be done: to exercise control over a patented article after its first authorized sale. The licensing scheme that this Court condemned in *Univis* as an unlawful extension of the patent laws is indistinguishable from the LGE licensing scheme.

In *Univis*, the patents at issue covered lens blanks as well as the steps of grinding and finishing them into prescription lenses. In *LGE*, the patents at issue cover microprocessors or chipsets in combination with "generic" components such as busses or memory. In *Univis*, Univis Corp. licensed Univis Lens to manufacture lens blanks. Here, LGE licensed Intel to manufacture and sell microprocessors and chipsets. In *Univis*, the lens blanks had no commercial use, other than to be ground and finished into prescription spectacles. In *LGE*, the microprocessors and chipsets that Intel was licensed by LGE to manufacture and sell had no use other than to be combined with busses or memory to create a useful device. In *Univis*, the restricted license agreements granted by Univis Corp. to both finishing wholesalers and grinding retailers explicitly disclaimed that any license rights were being transferred based upon their purchase of lens blanks. *Univis* at 245.[9] In *LGE*, the LGE-Intel license disclaims any license rights being transferred to Intel's customers, the computer makers. In *Univis*, each successive licensee in the manufacture, grinding, finishing and sale of lens blanks well understood that they purportedly needed to obtain a separate license from Univis Corp. with respect to the patented

[9] "All the licenses to wholesalers and retailers recite the Corporation's ownership of the lens patents and purport to confer on the licensee the privilege of selling the patented invention in the manner and to the extent stated." *Univis* at 245.

articles they had purchased. *Univis*, at 244-245. Here, LGE required that Intel notify its customers of the limited scope of the license. Thus, the parallelism between Univis Corp.'s licensing scheme and the LGE licensing scheme are obvious and compelling.

In *Univis*, this Court struck down Univis Corp.'s licensing scheme as an impermissible attempt to extend the patent laws beyond their Congressionally intended purpose. In so finding, this Court built on earlier cases articulating its long held view that the doctrine of patent exhaustion acts as a substantive limit on the power conferred by a patent:

> In construing and applying the patent law so as to give effect to the public policy which limits the granted monopoly strictly to the terms of the statutory grant, *Morton Salt Co. v. G. S. Suppiger Co.*, 314 U.S. 488, the particular form or method by which the monopoly is sought to be extended is immaterial. The first vending of any article manufactured under a patent puts the article beyond the reach of the monopoly which that patent confers. Whether the licensee sells the patented article in its completed form or sells it before completion for the purpose of enabling the buyer to finish and sell it, he has equally parted with the article, and made it the vehicle for transferring to the buyer ownership of the invention with respect to that article.

Univis at 251-252.

At the very heart of this decision lies the principle that any conditions imposed by the patentee on its licensees that would operate to extend the power of a patent beyond a first unconditional and authorized vending of a patented article are invalid. Clearly, the explicit license disclaimers and notice required by LGE constitute yet

another "particular form or method by which the monopoly is sought to be extended" beyond the first vending of any article manufactured under a patent. *Univis* at 251. Under this Court's precedents, these "restrictions" have no effect on the first sale doctrine.[10]

Yet, under the Federal Circuit's decision, they constitute "conditional licenses" which render the first sale doctrine inapplicable. The Federal Circuit has thus turned the law on its head, and it is therefore critically important to the health and vitality of our economy that the petition for a writ of certiorari be accepted so that the Federal Circuit's decision can be reviewed.

B. This Court Has Already Addressed Whether Express Disclaimers And Notice Requirements Can Circumvent The Application Of The First Sale Doctrine

The Federal Circuit's ruling now holds that the limitations on a patent imposed by Congress and as illuminated in this Court's precedents can be easily circumvented through a notice requirement and explicit disclaimer. See *LGE* at 1376 ("The LGE-Intel license expressly disclaims granting a license allowing computer system manufacturers to combine Intel's licensed parts with other non-Intel components. Moreover, this conditional agreement required Intel to notify its customers of the limited scope of the license, which it did."). In so hold-

[10] Indeed, notice concerning the absence of a license is inapposite to exhaustion since, if the patent is exhausted and the article is therefore "without the limit of the monopoly" (*Adams* at 456), no license by a purchaser or user is needed. This is recognized in the LGE-Intel License which preserves the applicability of the exhaustion doctrine. Brief for Plaintiff-Appellant at 7, *LGE* (No. 05-1261).

ing, the Federal Circuit has ignored prior decisions of this Court which have already addressed this issue.[11]

This Court's first case to address the issue of whether knowledge or intent on the part of the defendant could alter application of the exhaustion rule as enunciated in *Adams* was *Hobbie v. Jennison*, 149 U.S. 355 (1893). In that case, a licensee for the state of Michigan, Jennison, sold and delivered patented pipes for conveying gas water and other fluids knowing that they were to be used by the purchaser in the streets of Hartford Connecticut, a territory which was not licensed to Jennison. An attempt was then made to distinguish the case from

[11] The Federal Circuit has also ignored its own prior precedent recognizing that a restriction on sub-licensing is immaterial to whether or not exhaustion applies. In *Intel v. ULSI Sys. Tech., Inc.*, 995 F.2d 1566 (Fed. Cir. 1993), HP was licensed by Intel to sell math co-processor chips. *Id.* at 1567. ULSI contracted with HP under a foundry arrangement for HP to manufacture and sell to ULSI math co-processors of ULSI's design. *Id.* Intel sued ULSI for infringement, and ULSI defended on grounds of exhaustion. *Id* at 1568. The Federal Circuit upheld the exhaustion defense stating "the law is well-settled that an authorized sale of a patented product places the product beyond the reach of the patent." *Id.* Intel argued that exhaustion did not apply because under its license with HP, HP did not have the "power to sublicense" and because the chips at issue were not of HP's design. *Id.* at 1569.

The Federal Circuit found that the sales by HP were within "the broad terms of the licensing agreement," stating "while Intel may not be pleased with the deal it made permitting HP to make unrestricted sales, it nevertheless granted HP that right in 1983, presumably for consideration it believed to be of value at that time. It cannot now renege on that grant to avoid its consequences." *Id.* Further "the sale by HP to ULSI here did not create a sublicense. . . . HP did not grant a sublicense; it sold a product, albeit one designed by its purchaser. ULSI is immune from infringement not because it was a sublicensee, which it was not, but because HP was licensed and therefore a legitimate source of the chips." *Id.* at 1569-70. The Federal Circuit does not discuss or distinguish this prior precedent in its *LGE* decision.

Adams on the grounds that the sale was made with the knowledge and intention on the part of the defendant that the use would be at Hartford. This argument was soundly rejected by this Court which held that "neither the actual use of the pipes in Connecticut, or a knowledge on the part of the defendant that they were intended to be used there, can make him liable." *Hobbie* at 363.

Keeler was yet another case in which the patentee argued that the fact that the seller, a licensee under the patent, knew that its customer intended to use the goods in the territory of another. This Court again held that neither the seller's nor the purchaser's knowledge or intent was relevant to the application of the exhaustion doctrine as follows: "it is competent for one to sell the patented articles to persons who intend, with the knowledge of the vendor, to take them for use into the territory of the other." *Id.* at 666. Instead, this Court based its decision on the underlying principle of patent exhaustion that "a purchaser of an article made under the patent . . . by one authorized by the patentee to sell it, emancipates such article from any further subjection to the patent." Thus, since knowledge or intent by the licensee or its customer are irrelevant, a notice requirement cannot effect the application of the first sale doctrine.

The issue of whether express disclaimers can affect the application of the first sale doctrine has also been addressed and rejected by this Court. In fact, in *Univis* each of the separate lic[illegible]greements between Univis Corp. and the lens [illegible]anufacturers, the lens wholesalers, and the grinding and finishing retailers recited Univis Corp.'s ownership of the lens patents along with an express disclaimer that the particular license granted anything more than "the privilege of selling the patented invention in the manner and to the extent stated." *Univis* at 245. Yet this express disclaimer limiting the nature and scope of the license to the spe-

cific acts permitted in the license, did not curtail application of the first sale doctrine to Univis Corp.'s licensing scheme.

C. The Federal Circuit's Decision Has Had Such A Damaging Effect On This Court's Precedents That It Has Resulted In a District Court Finding Of No Exhaustion Based Upon "Implied Conditions" With No "Notice" Requirement

The Federal Circuit's *LGE* decision has created a dangerous expansion of the rights granted under a patent monopoly. Worse yet, the Federal Circuit decision has created ambiguity in the law that has already been exploited by at least one patent owner to erode the first sale doctrine even further. In *Minebea*, the patentee (Pap[illegible]) authorized its licensee (Minebea) to manufacture and sell products to its customers that would contributorily infringe (i.e., embody the essential features) of the patents in suit. Although the license agreement included a no sub-license provision, there was no requirement that Minebea provide any notice to its customers regarding the nature or extent of its license. There was no dispute that Minebea was acting within the scope of its authority in selling its products to its customers, without restriction.

Relying principally on this Court's *Univis* decision, the district court initially held in a June 24, 2005, Patent Exhaustion Opinion, 374 F.Supp.2d 202 (D.D.C. 2005), that Minebea's sales were unconditional within the meaning of the patent exhaustion doctrine. Then, after the Federal Circuit issued its *LGE* opinion, the district court reversed course, as follows:

> In view of the [Federal Circuit's *LGE*] holding, the Court finds that Minebea's sales of HDD spindle

> motors to its customers to have been conditional and therefore non-exhausting. The facts of *LGE* are analytically almost indistinguishable from those here. The only salient difference is that in *LGE*, the licensing agreement between the patent holder and the manufacturer/seller not only disclaimed a grant of sublicenses to the manufacturer/seller's customers, but also required the manufacturer/seller to notify its customer of the fact (which it did). There was no such notice requirement in the Papst/ Minebea licensing agreements. Although the Federal Circuit's *LGE* opinion may be open to interpretation on this point, in this Court's judgment the decision in *LGE* turned on the existence of an express disclaimer of sublicenses, *not* on the presence or absence of a notice requirement; it is the former, not the latter, that determines whether an authorized sale is conditional or unconditional. (emphasis in original)

Minebea, 444 F.Supp.2d at 159.

Accordingly, as now interpreted by at least one district court, it is sufficient for a patentee to avoid the limitation on the control of a patented article after a first sale merely by indicating in the license agreement between it and the manufacturer that no sublicense to downstream purchasers or users is granted. There is no requirement even that notice to the purchasers or users be provided. This is precisely the type of "inconvenience and annoyance to the public" that this Court described in *Keeler* as "too obvious to require illustration." *Keeler* at 667.

III. CONCLUSION

The petition for a writ of certiorari to the United States Court of Appeals for the Federal Circuit should be granted.

Respectfully submitted,

JOEL E. LUTZKER
Counsel of Record
DAVID H. KAGAN
SCHULTE, ROTH & ZABEL LLP
919 Third Avenue
New York, New York 10022
(212) 756-2000

Counsel for Amicus Curiae
Minebea Co., Ltd.

FILED
MAR 9 - 2007
OFFICE OF THE CLERK
SUPREME COURT, U.S.

No. 06-937

In the Supreme Court of the United States

QUANTA COMPUTER, INC., QUANTA COMPUTER USA, INC., Q-LITY COMPUTER, INC., COMPAL ELECTRONICS, INC., BIZCOM ELECTRONICS, INC., SCEPTRE TECHNOLOGIES, INC., FIRST INTERNATIONAL COMPUTER, INC. AND FIRST INTERNATIONAL COMPUTER OF AMERICA, INC.,

Petitioners.

v.

LG ELECTRONICS, INC.,

Respondent.

On Petition for a Writ of Certiorari to the United States Court of Appeals for the Federal Circuit

BRIEF OF DELL INC., HEWLETT-PACKARD, CO., AND GATEWAY, INC. AS AMICI CURIAE IN SUPPORT OF PETITIONERS

ANDREW J. PINCUS
Counsel of Record
CARL J. SUMMERS
Mayer, Brown, Rowe & Maw LLP
1909 K Street, NW
Washington, DC 20006
(202) 263-3000

Counsel for Amicus Curiae Dell Inc.

WILSON-EPES PRINTING CO., INC. – (202) 789-0096 – WASHINGTON, D. C. 20002

TABLE OF CONTENTS

Page

TABLE OF AUTHORITIES.....ii

INTEREST OF THE AMICI CURIAE.....1

INTRODUCTION AND SUMMARY OF ARGUMENT.....2

ARGUMENT.....3

A. The Legal Rule Applied By The Federal Circuit In This Case Is Inconsistent With This Court's Patent Exhaustion Jurisprudence.....4

B. The Federal Circuit's Rejection Of Fundamental Patent Exhaustion Principles Is Inconsistent With The Purposes Of The Patent Law And Rests On An Inaccurate Conception Of Royalty Negotiations.....9

C. The Federal Circuit's Rule Threatens To Impose Duplicative—And Potentially Very Large—Royalty Costs On Technology Products And Other Products That Might Implicate Large Numbers Of Patents.....13

CONCLUSION.....15

TABLE OF AUTHORITIES

Page(s)

CASES

Bloomer v. *McQuewan*, 14 How. 539 (1852) 5

eBay Inc. v. *MercExchange, L.L.C.*, 126 S. Ct. 1837 (2006) 3

General Talking Pictures Corp. v. *Western Electric Co.*, 305 U.S. 124 (1938) 6, 8

KSR Int'l Co. v. *Teleflex, Inc.*, No. 04-1350 (argued Nov. 28, 2006) 3

Keeler v. *Standard Folding Bed Co.*, 157 U.S. 659 (1895) 4, 8, 13

LG Elecs., Inc. v. *Asustek Computers, Inc.*, 248 F. Supp. 2d 912 (N.D. Cal. 2003) 5

LG Elecs., Inc. v. *Bizcom Elecs., Inc.*, 453 F.3d 1364 (Fed. Cir. 2006) 5, 11

Mallinckrodt, Inc. v. *Medipart, Inc.*, 976 F.2d 700 (Fed. Cir. 1992) 4, 5, 6, 8

MedImmune, Inc. v. *Genentech, Inc.*, 127 S. Ct. 764 (2007) 3

Pennock v. *Dialogue*, 27 U.S. (2 Pet.) 1 (1829) 12

United States v. *Gen. Elec. Co.*, 272 U.S. 476 (1926) 6, 7

United States v. *Masonite Corp.*, 316 U.S. 265 (1942) 4, 12

United States v. *Univis Lens Co.*, 316 U.S. 241 (1942) ..... *passim*

CONSTITUTIONS AND STATUTES

U.S. Const., Art. I, § 8, cl. 8 4

35 U.S.C. § 31 4

35 U.S.C. § 40 4

TABLE OF AUTHORITIES—continued

Page(s)

MISCELLANEOUS

James Bessen & Michael J. Meurer, *Lessons for Patent Policy from Empirical Research on Patent Litigation*, 9 LEWIS & CLARK L. REV. 1 (2005)..... 14

FTC, TO PROMOTE INNOVATION: THE PROPER BALANCE OF COMPETITION AND PATENT LAW AND POLICY (Oct. 2003)..... 14

Nat'l Research Council for the Nat'l Academies, A PATENT SYSTEM FOR THE 21ST CENTURY (Stephen A. Merrill et al. eds., 2004)..... 14

Carl Shapiro, *Navigating the Patent Thicket: Cross Licenses, Patent Pools, and Standard Setting, in* 1 INNOVATION POLICY AND THE ECONOMY 119, (Adam B. Jaffe et al. eds., 2000)..... 14

BRIEF OF DELL INC., HEWLETT-PACKARD, CO., AND GATEWAY, INC. AS AMICI CURIAE IN SUPPORT OF PETITIONERS

INTEREST OF THE AMICI CURIAE

Amici Dell Inc., Hewlett-Packard Company, and Gateway, Inc. are leading manufacturers of personal computers.[1] Many of the computers manufactured by amici incorporate microprocessor chips manufactured by Intel Corporation and memory components manufactured by other companies. In some cases, amici purchase the chips and memory as a single assembled component from an outside firm. In others, amici purchase the chips and memory separately and assemble the sub-components themselves. Petitioners are among the firms from which amici purchase the assembled component.

Respondent LG Electronics, Inc. takes the position — endorsed by the Federal Circuit in this case — that even though it has received a royalty from Intel for patents allegedly infringed by Intel's microprocessor chips, it can extract another royalty payment from petitioners because it required Intel to send petitioners a notice stating that they did not receive a "license" from respondent to use Intel products "by combining [them] with any non-Intel product." Pet. 3. If the Federal Circuit's decision is permitted to stand, and petitioners are required to enter into similar license arrangements with respondent, respondent then could claim that it can impose a similar condition on any licenses it issues to petitioners, seeking to require amici to pay yet a third royalty for use of the same articles.

---

[1] Pursuant to Rule 37.6, amici affirm that no counsel for a party authored this brief in whole or in part and that no person other than amici and its counsel made a monetary contribution to its preparation or submission. The parties' letters consenting to the filing of this brief have been filed with the Clerk's office.

Of course, the Federal Circuit's legal standard is not limited to respondent. The computers manufactured by amici, and many other technology products as well, consist of hundreds or even thousands of components, each of which can implicate a number of patents. Many of those components, like the component here, are manufactured and assembled in multiple steps by multiple entities before reaching amici. The regime created by the Federal Circuit's interpretation of the patent exhaustion doctrine allows each patent owner to work its way through the manufacturing chain, extracting a separate royalty for the same invention at each stage of the process. That gives the patent owner much more than the reward it is due for its invention, thus adding unjustified costs to the manufacturing process without serving the purposes of the patent system.

Amici therefore have a strong interest in urging the Court to grant review and overturn the Federal Circuit's patent exhaustion jurisprudence, which is directly contrary to the patent exhaustion principles previously articulated by this Court.

INTRODUCTION AND SUMMARY OF ARGUMENT

The doctrine of patent exhaustion historically has appropriately circumscribed the bundle of rights granted to patentees. It ensures that the patentee receives fair compensation for its invention, provides simplicity to the patent system, and guarantees peace for owners of patented articles.

The Federal Circuit has abandoned the doctrine of patent exhaustion, as it has been defined by this Court for over a century, and replaced it with a regime that serves no useful purpose but to multiply the recovery for clever patent-owners. The doctrine of patent exhaustion, once a definitional constraint on patent rights, has been reduced to a mere default rule of contract interpretation that easily is avoided, extending the rights of the patent-owner throughout the life of a patented article.

That transformation was accomplished by misinterpretation of this Court's prior decisions. Contrary to the Federal Circuit's interpretation, this Court's most recent and comprehensive discussion of patent exhaustion reiterates the traditional rule that all patent rights in an article are exhausted upon its first sale. The Federal Circuit dismissed this Court's holding by completely inverting the Court's reasoning and instead cited another, prior case as binding authority even though that prior case expressly declined to decide the relevant question.

Not only has the Federal Circuit departed from this Court's prior decisions, it also has created a regime that is contrary to the purposes of the patent system. The patent regime contemplated by the Federal Circuit's ruling is impractical, unfair, and inefficient. It does not best serve the purpose of the patent system — promoting the progress of science and the useful arts — but only furthers the goals of those seeking to extract multiple royalties on the same patented article. This Court should intervene and reassert the traditional, and well-conceived, doctrine of patent exhaustion.

ARGUMENT

Several times in recent years this Court has granted review in cases presenting important questions of patent law in order address claims that the Federal Circuit had adopted legal principles that are inconsistent with the relevant decisions of this Court. *E.g.*, *KSR Int'l Co.* v. *Teleflex, Inc.*, No. 04-1350 (argued Nov. 28, 2006); *MedImmune, Inc.* v. *Genentech, Inc.*, 127 S. Ct. 764 (2007); *eBay Inc.* v. *MercExchange, L.L.C.*, 126 S. Ct. 1837 (2006).

This case presents another example calling out for review. Misconstruing this Court's decision in *United States* v. *Univis Lens Co.*, 316 U.S. 241, 250 (1942), and undermining reasoned, well-settled patent policy, the Federal Circuit's ruling here — the culmination of a series of decisions beginning

with *Mallinckrodt, Inc.* v. *Medipart, Inc.*, 976 F.2d 700 (Fed. Cir. 1992) — permits patentees to invoke the patent infringement remedy to collect separate royalty payments at each stage of the manufacturing process and supply chain, the precise result ***rejected*** by this Court in *Univis Lens*. Review by this Court is plainly and urgently warranted.

A. The Legal Rule Applied By The Federal Circuit In This Case Is Inconsistent With This Court's Patent Exhaustion Jurisprudence.

"The declared purpose of the patent law is to promote the progress of science and the useful arts by granting to the inventor a limited monopoly, the exercise of which will enable him to secure the financial rewards for his invention." *Univis Lens*, 316 U.S. at 250 (citing U.S. Const., Art. I, § 8, cl. 8; 35 U.S.C. §§ 31, 40). That purpose "is fulfilled with respect to any particular article when the patentee has received his reward for the use of his invention by the sale of the article[;] * * * once that purpose is realized the patent law affords no basis for restraining the use and enjoyment of the thing sold." *Id.* at 251.

Accordingly, "[t]he first vending of any article manufactured under a patent puts the article beyond the reach of the monopoly which that patent confers." *Id.* at 252. And any condition on the use and enjoyment of a patented article after an authorized sale "derives ***no support from the patent***," but instead, "must stand on the same footing * * * as like stipulations with respect to unpatented commodities." *Id.* at 251 (emphasis added); see also *Keeler* v. *Standard Folding Bed Co.*, 157 U.S. 659, 666 (1895) (whether a patent-owner can impose conditions on the post-sale use and enjoyment of a patented article is "a question of contract, and not [a question] under the inherent meaning and effect of the patent laws").[2]

---

[2]. *Accord United States* v. *Masonite Corp.*, 316 U.S. 265, 277-78 (1942) ("There are strict limitations on the power of the patentee to

This Court, in *Univis Lens*, also made clear that all patent rights are exhausted upon the first sale, "[w]hether the licensee sells the patented article in its completed form or sells it before completion for the purposes of enabling the buyer to finish and sell it." 316 U.S. at 252.

The Federal Circuit in this case nonetheless adopted a principle that allows a patent owner to avoid this Court's *Univis Lens* holding. According to the decision below, "[i]t is axiomatic that the patent exhaustion doctrine commonly referred to as the first sale doctrine, is triggered by an unconditional sale * * * [but] does not apply to an expressly conditional sale or license." *LG Elecs., Inc.* v. *Bizcom Elecs., Inc.*, 453 F.3d 1364, 1369 (Fed. Cir. 2006). In other words, the Federal Circuit has turned an essential constraint on the limited rights granted to a patentee — that it extends to the first authorized sale of an article manufactured under the patent but no further — into an optional limitation, easily avoided by altering the terms of sale.[3]

Although this is the first case in which the Federal Circuit has declared its voluntary version of the patent exhaustion doctrine to be "axiomatic," the Federal Circuit first parted ways with this Court's jurisprudence 15 years ago in *Mallinckrodt*. That opinion is the foundation of the Federal

---

attach conditions to the use of the patented article. As Chief Justice Taney said in *Bloomer* v. *McQuewan*, 14 How. 539, 549, when the patented product 'passes to the hand of the purchaser, it is no longer within the limits of the monopoly. It passes outside of it, and is no longer under the protection of the act of Congress.'").

[3] The district court found that the factual predicate relied upon by the Court in *Univis Lens* is present here: the microprocessors sold to the defendants by Intel were "destined * * * to be finished by the purchaser in conformity with the patent because they have no reasonable non-infringing use." *LG Elecs., Inc.* v. *Asustek Computers, Inc.*, 248 F. Supp. 2d 912, 915 (N.D. Cal. 2003) (internal quotation marks omitted). That factual finding was not disturbed on appeal.

Circuit's erroneous version of the patent exhaustion doctrine and demonstrates that the Federal Circuit has misunderstood — if not outright rejected — this Court's decision in *Univis Lens*.

Mallinckrodt held that a restriction on the post-sale use and enjoyment of a patented article is enforceable under the patent laws as long as it does not "venture[] beyond the patent grant and into behavior having an anticompetitive effect not justifiable under the rule of reason." 976 F.2d at 708. That ruling arose primarily from the Federal Circuit's misinterpretation of two cases: *General Talking Pictures Corp.* v. *Western Electric Co.*, 305 U.S. 124 (1938), and *Univis Lens*.

Mallinckrodt cited *General Talking Pictures* — rather than *Univis Lens* — as if it were the governing precedent from this Court (see 976 F.2d at 701) and interpreted that decision to authorize a patent owner to impose conditions on the use and enjoyment of articles manufactured and sold under a patent (*id.* at 704-06). The Federal Circuit's error rests on its confusion of two lines of decisions — those dealing with limitations on a license to ***manufacture*** a patented device and those dealing with limitations on the ***downstream use*** of a patented device.

General Talking Pictures involved a license to manufacture a patented device only for certain fields of use. Limitations on a license to manufacture a patented device — as opposed to limitations on the use and enjoyment of a device after it has been sold — generally are enforceable under the patent laws. *E.g.*, *Gen. Talking Pictures*, 305 U.S. at 127; *United States* v. *Gen. Elec. Co.*, 272 U.S. 476, 489-90 (1926). In *General Talking Pictures*, the manufacturing licensee and a purchaser agreed that the licensee would make, and the purchaser use, certain of the patented devices for a use that was excluded under the license to manufacture. In other words, they conspired to violate the license to manufacture. The patentee sued for infringement.

This Court held that the devices in question "were made and sold outside the scope of the license" which is "precisely the same as if no license whatsoever had been granted." *Id.* at 127. Therefore, the manufacturer "was guilty of an infringement when it made the [devices]"(*id.* at 126) and the devices that it made "were not manufactured or sold 'under the patent(s)'" (*id.* at 125). With respect to the purchaser, the Court held that it too was guilty of infringement because it "ordered, purchased and leased [the unlicensed devices] knowing the facts" (*id.* at 126), placing it "in no better position than if it had manufactured the [devices] itself without a license" (*id.* at 127).

The Court did ***not*** hold that the limitations in the license to manufacture would have constrained the downstream use and enjoyment of the articles by the purchaser if the articles had been manufactured under the patent license. In fact, the Court explicitly said that it had "no occasion to consider what the rights of the parties would have been if the [device] had been manufactured 'under the patent' and 'had passed into the hands of a purchaser in the ordinary channels of trade.' Nor [did it have] occasion to consider the effect of a 'licensee's notice' which purports to restrict the use of articles lawfully sold." *Id.* at 127.

Four years later, in *Univis Lens*, the Court considered those precise issues. It held that the authorized sale of an article manufactured "under the patent" exhausts all patent claims in the article regardless of any purported limitation on the subsequent use and enjoyment of the article.[4] Indeed, the Court characterized the patentee's attempt to enforce conditions on the use and enjoyment of the patented article after an authorized sale as an effort to "extend [the patent monopoly] beyond the fair meaning of the patent statutes and the con-

[4] That is the situation here: there is no dispute that Intel's microprocessor chips are manufactured under the license granted to Intel by LGE.

struction which has hitherto been given to them." 316 U.S. at 252.

Mallinckrodt did not acknowledge that *Univis Lens* is this Court's most recent and most relevant holding on the proper scope of the patent exhaustion doctrine; it seemed not to understand that *Univis Lens* answered the questions that were explicitly left unanswered in *General Talking Pictures*. Instead, *Mallinckrodt* relegated *Univis Lens* to a single parenthetical reference, interpreting it to bar the use of patent law to enforce a condition on the post-sale use and enjoyment of a patented article only if that condition violates the antitrust laws. See 976 F.2d at 708.

In fact, as we have discussed, *Univis Lens* held that a condition on the post-sale use and enjoyment of a patented device violated the antitrust laws ***because*** it was not enforceable under the patent laws, and thus was not protected against antitrust scrutiny. See 316 U.S. at 252 ("[t]he price fixing features of appellees' licensing system, which are not within the protection of the patent law, violate the Sherman Act").

The Federal Circuit compounded its error by stating that, unless limitations on the subsequent use and enjoyment of a patented article are unlawful, "private parties retain the freedom to contract concerning conditions of sale." *Mallinckrodt*, 976 F.2d at 708. But a patentee's "freedom to contract" is not at issue under the patent exhaustion doctrine. A patentee is free to impose downstream conditions on the sale of a patented article, enforcement of which will depend on the same principles of contract law that would govern similar conditions on the sale of a non-patented article. See *Univis Lens*, 316 U.S. at 251; *Keeler*, 157 U.S. at 666.

The relevant question under the patent exhaustion doctrine, however, is whether the patent owner can utilize the rights granted by the patent laws to collect multiple additional royalties from downstream users of the patented good.

This Court said "no" in *Univis Lens*. The Federal Circuit's opposite conclusion here warrants review by this Court.[5]

B. The Federal Circuit's Rejection Of Fundamental Patent Exhaustion Principles Is Inconsistent With The Purposes Of The Patent Law And Rests On An Inaccurate Conception Of Royalty Negotiations.

The Federal Circuit rationalized the result in this case as follows: "The theory behind" the patent exhaustion doctrine is that, in "[a]n unconditional sale of a patented device," "the patentee has bargained for, and received, an amount equal to the full value of the goods," but in "an expressly conditional sale or license * * * it is more reasonable to infer that the parties negotiated a price that reflects only the value of the 'use' rights conferred by the patentee." 453 F.3d at 1369-70.

As we have discussed, that analysis confuses the legal basis for the patent exhaustion doctrine: it does not rest on an assumption about the patent owner's intent in making the sale, but instead is a limitation on the bundle of rights granted to patent owners. Setting aside its legal pedigree, however, the Federal Circuit's "intent-based" patent exhaustion doctrine is bad policy founded on a false premise.

The regime envisaged by the Federal Circuit, where patent-owners can partition their patent rights in a patented article and sell them piecemeal, obtaining a portion of the total

---

[5] As petitioners observe (Pet. 26-27), because software users typically create new copies of a software program whenever the program is used, a patent owner's ability to impose conditions on the use of software flows from the broader rights of a patent owner to control the manufacture of a patented good. For similar reasons, the distributor of copyrighted software can evade the first sale doctrine through licensing rather than sale of the software. There is of course no manufacturing of additional copies of the components at issue in this case — or with respect to the sale of patented articles consisting of physical components generally.

royalty from each entity that purchases or uses the article (presumably according to the proportional value derived from the invention by each entity), is economically and practically unrealistic.

Contrary to the assumption underlying the Federal Circuit's regime, the power of the patent with respect to a future purchaser is not diminished by a license limited to the initial manufacturer. If petitioners are required to pay another royalty for the use of respondent's patents, respondent will have the same bargaining power with respect to petitioners as if respondent had not licensed Intel at all — the prior license to Intel has no value for petitioners and Intel's prior use under its license did not diminish the value to petitioners of the right to use the invention.

Indeed, respondent's negotiating leverage likely would be enhanced with respect to users in succeeding levels of the manufacturing or supply chain. To the extent petitioners' principal supplier, Intel, had entered into a license agreement with respondent — rather than, for example, designing its product to avoid respondent's claims — petitioners would have little option but to accede to a license. The alternative would be to look for another component supplier, which could be difficult if, for example, patents held by Intel were essential to supply components that meet petitioners' needs.

Similarly, if respondent obtains another royalty from the petitioners and requires them to accept a license that does not extend to a subsequent purchaser, amici will find themselves bargaining with respondent on the same terms as if no prior royalties had been paid for the articles at issue. The reality is that amici will be asked to pay the third royalty on the same articles, not a fictional "fair proportional share" of the total royalty due to LGE.

Furthermore, there is no reason to think that this process will stop with amici. Under the Federal Circuit's opinion, respondent could seek to require amici to accept a limited li-

cense and then proceed to extract another layer of royalties from end-users who purchase amici's computers. This is a particularly troubling possibility given the Federal Circuit's holding that the sale of a patented article does not exhaust method claims at all — *i.e.*, that the patent exhaustion doctrine does not apply to method claims (453 F.3d at 1369-70) — even method claims that do not relate to the manufacture of further articles but are practiced only for their intrinsic value because they are necessary to the use and enjoyment of the invention itself. With appropriate contracting and notice to consumers, the opinion below would allow respondent to extract an annual licensing fee on every computer with Intel microprocessors inside.

The idea of a fair piecemeal partition of patent rights is particularly unrealistic in this context. The manufacture of amici's computers requires the fabrication or acquisition of hundreds, if not thousands, of separate components. Many of those components themselves are immensely complex amalgamations of various technologies. It is unrealistic to think that amici can accurately track, let alone negotiate the terms of, all potential patent license terms related to the components that make up their computers. But the regime created by the Federal Circuit ensures that every patentee with knowledgeable counsel eventually will come knocking on amici's doors after they have extracted royalties and limited licenses from upstream firms on the manufacturing chain.[6]

---

[6] The facts underlying the patent claims in this case perfectly exemplify the point. The five patents cited by the Federal Circuit trace their parentage to applications filed from 1985 to 1988 and the patents themselves issued between 1990 and 1999. Respondent had no role in developing the inventions embodied in the patents, but simply acquired them from a third party. It is perfectly clear that this lawsuit is not about protecting respondent's inventive contributions to computer technology but about respondent reaping a windfall through aggressive licensing practices.

Moreover, as petitioners' redacted petition reveals, negotiations over patent rights and cross-licensing in the high technology field are very sensitive, confidential, and often quite literally opaque to other parties. The inability of downstream users to gain information about the outcome of prior negotiations is one more reason that the Federal Circuit's imagined regime of a fair piecemeal partition of the limited monopoly granted to a patentee is fantasy.

In short, the notion that underlies the Federal Circuit's doctrine of "intent based" patent exhaustion — that there will be a series of negotiations during which each entity that owns or uses the invention throughout the manufacturing process (and, thereafter, owns a "finished" product containing the invention) will pay its fair share of the royalty due to the patent owner — is simply false. Instead, the regime established by the Federal Circuit allows a clever patent owner to extract duplicative royalties each time that an article practicing its patent changes hands.

That regime may be good for patent owners, but it is not good patent policy. This Court always has been very clear that "the promotion of the progress of science and the useful arts is the 'main object' [of the patent system]; reward of inventors is secondary and merely a means to that end." *Masonite*, 316 U.S. at 278 (quoting *Pennock* v. *Dialogue*, 27 U.S. (2 Pet.) 1, 19 (1829) (citations omitted)). Allowing the patent owner to multiply its recovery by extracting a new, duplicative royalty at each stage of ownership does not promote the progress of science and the useful arts and thus does not serve the purposes of the patent system.

Indeed, even if the Federal Circuit's notion of a piecemeal partition of the monopoly were practically possible, it still would not make sense because of its inefficiency. This Court's traditional doctrine of patent exhaustion forces the patent owner to extract the entire royalty that it is due for its invention at a single point. The regime urged by respondent and endorsed by the Federal Circuit, on the other hand, re-

quires multiple points of negotiation between the patent owner and each entity that ever has owned or used the article embodying the invention. That obviously imposes unnecessary transactional costs on the manufacturing and supply-chain process and has no useful purpose but to magnify the recovery for the patent owner. Far from promoting, the Federal Circuit's regime affirmatively impedes the development of science and the useful arts.

By eviscerating the traditional doctrine of patent exhaustion, the Federal Circuit has realized the concern expressed by this Court over a century ago in *Keeler*. That opinion recounted the virtues of the traditional doctrine of patent exhaustion — a full reward for the inventor, simplicity for all parties, and peace for owners of the patented article — and opined that "[t]he inconvenience and annoyance to the public that an opposite conclusion would occasion are too obvious to require illustration." 157 U.S. at 666-67. Unfortunately, the predicted inconvenience and annoyance are now made real by the Federal Circuit's decision. This Court's intervention is required.

C. The Federal Circuit's Rule Threatens To Impose Duplicative — And Potentially Very Large — Royalty Costs On Technology Products And Other Products That Might Implicate Large Numbers Of Patents.

The practical implications of the Federal Circuit's ruling are enormous. We have discussed how it will permit respondent to seek to exact duplicative royalties at successive stages of the manufacturing process. But respondent's patents are only a few of the thousands of patents that may be implicated by the computers produced by amici.[7] Under the Federal Cir-

---

[7] As several panelists explained to the FTC when it explored the issue, "the plethora of patents in the computer hardware industry makes it 'virtually impossible to search all potentially relevant pat-

cuit's rule, the owner of every single patent implicated by any component of a computer would be able to follow the same multiple-royalty-collection process as respondent.

And computers are not unique in this way. Technology products typically are made up of very large numbers of patented components. Thus, computers, cellular telephones, MP3 players, as well as airplanes, cars, and communications networks often contain thousands of different physical components, each of which may be the subject of many patents. See FTC, TO PROMOTE INNOVATION: THE PROPER BALANCE OF COMPETITION AND PATENT LAW AND POLICY, Ch. 3, at 15-56 (Oct. 2003); Nat'l Research Council for the Nat'l Academies, A PATENT SYSTEM FOR THE 21ST CENTURY 37 (Stephen A. Merrill et al. eds., 2004); Carl Shapiro, *Navigating the Patent Thicket: Cross Licenses, Patent Pools, and Standard Setting*, *in* 1 INNOVATION POLICY AND THE ECONOMY 119, 125-26 (Adam B. Jaffe et al. eds., 2000).

The Federal Circuit's ruling in this case will allow every owner of any patent that is infringed by such a product — and even an owner of a patent that simply might arguably be infringed — to engage in the same multi-level royalty-assessment strategy employed by respondent. It therefore threatens to impose a huge financial and practical burden on manufacturers of technology products.

It is no answer that a manufacturer can choose to contest the patent claim rather than pay the royalty. Patent infringement claims are easy to assert, but difficult to disprove. Especially in the technology context, the validity of a patent — as well as its legitimate boundaries — sometimes may be difficult to determine, which allows the assertion of extremely tenuous claims. See, *e.g.*, James Bessen & Michael J. Meurer, *Lessons for Patent Policy from Empirical Research*

---

ents, review the claims,' and evaluate the infringement risk." FTC REPORT, *supra*, ch. 2 at 3.

on Patent Litigation, 9 LEWIS & CLARK L. REV. 1, 16 (2005) ("[C]ourt errors are difficult to avoid in patent litigation, because claim interpretation is complex and it is difficult for fact-finders to assess evidence of infringement. Thus, a deserving defendant may face a significant risk of liability.").

This Court should grant review to reestablish the well reasoned policy of patent exhaustion and thereby preclude the use of patent law principles to impose what amounts to the equivalent of a technology tax at every level of the manufacturing process.

CONCLUSION

The petition for a writ of certiorari should be granted.

Respectfully submitted.

ANDREW J. PINCUS
Counsel of Record
CARL J. SUMMERS
Mayer, Brown, Rowe & Maw LLP
1909 K Street, NW
Washington, DC 20006
(202) 263-3000

Counsel for Amicus Curiae Dell Inc.

MARCH 2007

73 530806 (10) 150pgs

Supreme Court, U.S.
FILED
NOV 5 - 2007
OFFICE OF THE CLERK

No. 06-937

In the Supreme Court of the United States

QUANTA COMPUTER, INC., QUANTA COMPUTER USA, INC., Q-LITY COMPUTER, INC.,
PETITIONERS,

v.

LG ELECTRONICS, INC.,
RESPONDENT.

ON WRIT OF CERTIORARI TO THE UNITED STATES COURT OF APPEALS FOR THE FEDERAL CIRCUIT

JOINT APPENDIX – VOLUME I
(Pages 1 to 144)

Counsel for Petitioners

MAUREEN E. MAHONEY
Counsel of Record
J. SCOTT BALLENGER
MELISSA B. ARBUS
ANNE W. ROBINSON
LATHAM & WATKINS LLP
555 11TH STREET, N.W.
SUITE 1000
WASHINGTON, DC 20004
(202) 637-2200
(202) 637-2201 (FAX)
maureen.mahoney@lw.com

Counsel for Respondent

CARTER G. PHILLIPS
Counsel of Record
VIRGINIA A. SEITZ
JEFFREY T. GREEN
JEFFREY P. KUSHAN
SIDLEY AUSTIN LLP
1501 K STREET, NW
WASHINGTON, DC 20005
(202) 736-8015
(202) 736-8711 (FAX)
cphillips@sidley.com

Additional Counsel Listed on Inside Cover

PETITION FOR CERTIORARI NOVEMBER 30, 2006
CERTIORARI GRANTED SEPTEMBER 25, 2007

Additional Counsel for Petitioners

TERRENCE D. GARNETT
VINCENT K. YIP
PETER WIED
PAUL, HASTINGS, JANOFSKY
& WALKER LLP
515 SOUTH FLOWER STREET
25TH FLOOR
LOS ANGELES, CA 90071
(213) 683-6000

MAXWELL A. FOX
PAUL, HASTINGS, JANOFSKY
& WALKER LLP
34 F ARK MORI BUILDING
P.O. BOX 577
12-32 AKASAKA 1-CHOME
MINATO-KU, TOKYO 107-6034
JAPAN
813 6229 6100

JOINT APPENDIX
TABLE OF CONTENTS – VOL. I

Page

United States Court of Appeals for the Federal Circuit Relevant Docket Entries: *LG Electronics v. Bizcom Electronics*, No. 05-1261 1

United States District Court for the Northern District of California Relevant Docket Entries: *LG Electronics, Inc. v. Q-Lity Computer Inc., et al.*, No. 4:01-cv-02187-CW 7

Complaint, *LG Electronics Inc. v. Q-Lity Computer Inc., Quanta Computer, Inc. and Quanta Computer USA, Inc.* (N.D. Cal. Apr. 16, 2001) 134

September 4, 2000 Letter from John Matheson to David Shing, attached to Declaration of David M. Morris in Support of LGE's Cross-Motion for Partial Summary Judgment (N.D. Cal. May 3, 2002) (A 3960[1]) (bates number omitted in printing) 143

---

[1] "A ___" refers to the Joint Appendix filed in the Federal Circuit.

JOINT APPENDIX
TABLE OF CONTENTS - VOL. II
(UNDER SEAL)

Page

Patent Cross License Agreement Between LG Electronics, Inc. and Intel Corporation, Exhibit A to Declaration of Maxwell A. Fox in Support of Defendants Q-Lity Computer Inc., Quanta Computer Inc., and Quanta Computer USA, Inc.'s Motion For Partial Summary Judgment (N.D. Cal. May 3, 2002) (A 3605-3619) (bates numbers omitted in printing)..... 145

Master Agreement with Attachments A-C, Exhibit B to Declaration of Maxwell A. Fox in Support of Defendants Q-Lity Computer Inc., Quanta Computer Inc., and Quanta Computer USA, Inc.'s Motion For Partial Summary Judgment (N.D. Cal. May 3, 2002) (A 3621-3632) (bates numbers omitted in printing)..... 174

SUPPLEMENT TO THE JOINT APPENDIX TABLE OF CONTENTS

Page

United States Patent No. 4,939,641, Multi-Processor System with Cache Memories (July 3, 1990) (A 139-159) 199

United States Patent No. 5,077,733, Priority Apparatus Having Programmable Node Dwell Time (Dec. 31, 1991) (A 160-183) 220

United States Patent No. 5,379,379, Memory Control Unit with Selective Execution of Queued Read and Write Requests (Jan. 3, 1995) (A 204-A 227) 244

ITEMS PREVIOUSLY REPRODUCED

In accordance with Supreme Court Rule 26.1, the following items have been omitted in printing this joint appendix because they appear on the following pages of the appendix to the Petition for a Writ of Certiorari (Nov. 30, 2006)

Opinion, *LG Electronics, Inc. v. Bizcom Electronics, Inc., et al.*, Nos. 05-1261, 05-1262, 05-1263, 05-1264, 05-1302, 05-1303, 05-1304 (Fed. Cir. July 7, 2006) 1a

Order on Cross-Motions for Summary Judgment, *LG Electronics, Inc. v. Asustek Computer, Inc., et al.*, Nos. C 01-00326 CW, C 01-1375 CW, C 01-01594 CW, C 01-02187 CW, C 01-01552 CW (N.D. Cal. Aug. 20, 2002) 26a

Order Granting in Part Defendants' Motion for Summary Adjudication and Granting in Part Plaintiff's Motion for Summary Adjudication, *LG Electronics, Inc. v. Asustek Computer, Inc., et al.*, Nos. C 01-00326 CW, C 01-1375 CW, C 01-01594 CW, C 01-02187 CW, C 01-01552 CW (N.D. Cal. Feb. 6, 2003) 52a

Order Addressing Cross Motions for Summary Judgment and Granting Defendants' Motion to Amend, *LG Electronics, Inc. v. Bizcom Electronics, Inc., et al.*, Nos. C 01-00326 CW, C 01-1375 CW, C 01-01594 CW, C 01-02187 CW, C 01-01552 CW (N.D. Cal. Nov. 30, 2004) 62a

Order Denying Rehearing, *LG Electronics, Inc. v. Bizcom Electronics, Inc., et al.*, Nos. 05-1261, 05-1262, 05-1263, 05-1264, 05-1302, 05-1303, 05-1304 (Fed. Cir. Sept. 1, 2006) 82a

RELEVANT DOCKET ENTRIES

U.S. Court of Appeals for the Federal Circuit

No. 05-1261, *consolidated with* Nos. 05-1262, 05-1263, 05-1264, 05-1302, 05-1303, and 05-1304

Date Filed	Docket Text
3/11/05	Ordered: Upon consideration of the Notices of Appeal filed by LG Electronics on 3/1/05 in 01-cv-1375, 01-cv-1552, 01-cv-1594, and 01-cv-2187 (docketed as, resp, 05-1261, -1262, -1263, -1264), it is ordered that the appeals are consolidated.
	* * *
3/29/05	Note to file: Lead appeal 05-1261 is consolidated with cross appeals 05-1302 (filed by Bizcom et al), 05-1303 (filed by First Intl Computer et al), and 05-1304 (filed by Q-Lity Compuer et al).
3/29/05	Official caption revised (to add cross appeals).
	* * *
4/18/05	Objections to the official caption (treated as a motion to revise the official caption).

4/28/05	Motion granted. Revised official caption reflected in this order.
	* * *
5/2/05	Official caption revised pursuant to the court order of 4/28/05. Revised caption sent to the parties.
5/9/05	Brief for plaintiff-appellant LG Electronics, Inc. . By LG Electroinics, Inc. (appellant). Served by mail on 5/9/2005. Filed on 5/9/2005 . (confidential & non-confidential versions)
	* * *
5/17/05	Cross appellant's certificate of no objection to appelalnt's non-confidential opening brief. (noted)
5/17/05	Cross appellant's certificate of no objection non-confidential opending brief. (noted)
	* * *
5/25/05	Filed: transcript purchase order form for the defendants-cross appellants, Q-Lity Computer, Inc., Quantana Computer USA, Inc. & Quantana Computer, Inc.
	* * *

5/31/05	Brief of the amicus curiae Papst Licensing GMBH & Co. KG in support of plaintiff-appellant LG Electronics, Inc. . By LG Electronics, Inc. (amicus). Served by mail on 5/24/2005. Filed on 5/31/2005 . (non-confidential)
7/22/05	Notice of joinder for defendant-appellee Everex Systems, Inc. . By Everex Systems, Inc. (appellee). Served by mail on 7/22/2005. Filed on 7/22/2005 . (non-confidential)
7/25/05	Notice of joinder by the defendant-appellee Everex Systems, Inc. The appellee joins in the defendants-cross appellants' briefs.

* * *

8/9/05	Notice of correction rec'd by appellant.
8/9/05	Corrections made to briefs in the clerks office.
8/18/05	Brief of defendants-cross-appellants Bizcom Electronics, Inc., Compal Electronics, Inc., and Sceptre Technologies, Inc. . By Bizcom Electronics, Inc., et al. (cross-appellants). Served by mail on 8/18/2005. Filed on 8/18/2005 . (confidential & non-confidential versions)

8/19/05	Letter of cross appellants Bizcom Electronics, Inc. et al. apprising the court in order to comply with the trial court's protective order, not to release their nonconfidential version to the public until August 29, 2005.
8/25/05	Confirmation letter of cross appellants Bizcom Electronics, Inc. et al. apprising the court that there are no objections to the filing of their nonconfidential version.
8/19/05	Brief of defendants-cross-appellants Q-Lity Computer, Inc., Quanta Computer, Inc., Quanta Computer USA, Inc., First International Computer, Inc., & First International Computer . By Q-Lity Computer, Inc., et al. (cross-appellants). Served by mail on 8/19/2005. Filed on 8/19/2005 . (confidential & non-confidential versions)
	* * *
9/19/05	Brief of the amicus curiae Minebea Co., Ltd., in support of defendants-appellees . By Minebea Co., Ltd. (amicus). Served by mail on 8/26/2005. Filed on 9/19/2005 . (non-confidential)
10/3/05	Reply brief for plaintiff-appellant LG Electronics . By LG Electronics (Appellant). Served by mail on

	10/3/2005. Filed on 10/3/2005 . (confidential & non-confidential versions)
10/20/05	Reply brief of defendants-cross-appellants Bizcom Electronics, Inc., Compal Electronics, Inc., Sceptre Technologies, Inc., Q-Lity Computer, Inc., Quanta Computer, Inc., et al. . By Bizcom Electronics, Inc., et al. (cross-appellants). Served by mail on 10/20/2005. Filed on 10/20/2005 . (non-confidential)
10/21/05	Notice of correction for the reply brief of LG Electronic (appellant.) Corrections completed on 10/21/05.
10/21/05	Notice of correction received by cross-appellants. (non-substative changes involving Appendix citations corrected in initial brief)
10/31/05	Joint Appendix (eight volumes) . By LG Electronics, Inc. (appellant). Served by mail on 10/31/2005. Filed on 10/31/2005 . (confidential & non-confidential versions)
	* * *
12/14/05	Appellant's notice of correction to both the confidential and non-confidential versions of the Appendix.

* * *

4/17/06	57	Appellant's ltr to court regarding certain material in the Appendix. (sent to Panel)
7/7/06		Disposition: Affirmed-in-Part, Reversed-in-Part, Vacated-in-Part, and Remanded ; by Panel
9/8/06		Mandated on

* * *

10/2/07	64	Notification letter from the Clerk of the Supreme Court that the petition for writ of certiorari has been granted.

U.S. District Court for the Northern District of California (Oakland)

No. 4:01-cv-02187-CW

Date Filed #	Docket Text
04/16/2001 1	COMPLAINT *for patent infringement; demand for jury trial; summons issued;* against; Q-LITY COMPUTER INC., QUANTA COMPUTER INC., QUANTA COMPUTER USA, INC. (Filing fee $150 receipt number 5502678). Filed by LG ELECTRONICS INC. (tg,) Modified (listed defendants individually) on 4/23/2001 (tg,). Additional attachment(s) added on 5/11/2001 (lfc,). (Entered: 04/19/2001)
	* * *
06/14/2001 15	ORDER RELATING CASE with member cases C-01-326-CW, C-01-1070-CW, C-01-1552-CW, C-01-1375-CW, C-01-1594-CW. ALL CASES PREVIOUSLY DESIGNATED AS ECF ARE EXEMPT AND ALL DOCUMENTS SHALL BE PAPER FILED. Case reassigned to Judge Claudia Wilken for all further proceedings. Judge Vaughn R. Walker no longer assigned to case Signed by Judge Claudia Wilken on 6/14/01. (cp) (Entered: 06/14/2001)

06/18/2001 16 MOTION to Consolidate Cases *with memorandum of points and authorities* filed by LG Electonics Inc.. Motion Hearing set for 8/3/2001 10:00 AM. (cp,) (Entered: 06/20/2001)

06/18/2001 17 MOTION to Consolidate Cases *with memorandum of points and authorities* filed by LG Electonics Inc.. Motion Hearing set for 8/3/2001 10:00 AM. (cp,) Modified on 6/25/2001 (cp,)***DUPLICATE ENTRY***. (Entered: 06/20/2001)

* * *

07/13/2001 20 Memorandum in Opposition re [16] *motion to consolidate* filed by Q-Lity Computer Inc., Quanta Computer Inc., Quanta Computer USA, Inc.. (cp,) (Entered: 07/16/2001)

07/13/2001 21 DECLARATION in Support re [20] *opposition to motion to consolidate (Chiu-Hua Li)* filed by Q-Lity Computer Inc., Quanta Computer Inc., Quanta Computer USA, Inc.. (Related document(s)[20]) (cp,) (Entered: 07/16/2001)

* * *

07/16/2001 23 ANSWER to Complaint *and,* COUNTERCLAIM against LG Electonics Inc. by Q-Lity Computer

Inc.. (cp,); demand for jury trial; Modified on 7/17/2001 (cp,). (Entered: 07/17/2001)

07/16/2001 24 ANSWER to Complaint *and*, COUNTERCLAIM ; *demand for jury trial* against LG Electonics Inc. by Quanta Computer USA, Inc.. (cp,) (Entered: 07/17/2001)

07/16/2001 25 ANSWER to Complaint *and*, COUNTERCLAIM ;*demand for jury trial* against LG Electonics Inc. by Quanta Computer Inc.. (cp,) (Entered: 07/17/2001)

07/20/2001 26 Reply to Opposition re [16] *motion to consolidate* filed by LG Electonics Inc.. (kk,) (Entered: 07/20/2001)

***

07/27/2001 28 REPLIES to Counterclaims of Q-Lity Computer, Inc. [23-1], Quanta Computer, Inc., [24-1], Quanta Computer USA, Inc [25-1] by LG Electonics Inc. (kc,) (Entered: 07/31/2001)

08/03/2001 29 Minute Entry: Motion Hearing held; GRANTING in part the motion to consolidate cases [16]; case C-01-1552 consolidated with C-01-1594; case management conference set for 10/12/2001 at 01:30 PM. (Court

		Reporter Joan Columbini.) (kc) (Entered: 08/07/2001)
08/15/2001	30	ORDER granting IN PART motion to consolidate case [16]; CONSOLIDATING C-01-1552-CW and C-01-1594-CW into ONE action for ALL purposes; all six cases C-01-326-CW, C-01-1552-CW, C-01-1070-CW, C-01-1375-CW, C-01-2187-CW, C-01-1594-CW will be coordinated for pretrial pruposes. Signed by Judge Claudia Wilken on 8/15/01. (cp,) (Entered: 08/16/2001)
		***
11/28/2001	47	STIPULATION AND ORDER for protective order, and that local rule 79-5 still applies. Signed by Judge Claudia Wilken on 11/28/01. (cp,) (Entered: 12/03/2001)
		***
12/18/2001	55	MOTION to Compel *Plaintiff LG Electronics, Inc. to Amend Its Claim Chart and For Protective Order* filed by Q-Lity Computer Inc., Quanta Computer Inc., Quanta Computer USA, Inc.. Motion Hearing set for 1/22/2002 10:00 AM. (Garnett, Terry) (Entered: 12/18/2001)

12/18/2001	56	DECLARATION in Support re 55 *Motion to Compel Plaintiff LG Electronics, Inc. to Amend Its Claim Chart and For Protective Order* filed by Q-Lity Computer Inc., Quanta Computer Inc., Quanta Computer USA, Inc.. (Related document(s)55) (Garnett, Terry) (Entered: 12/18/2001)
12/18/2001	57	NOTICE re 55 *Exhibit Attachment to Declaration of Maxwell A. Fox* by Q-Lity Computer Inc., Quanta Computer Inc., Quanta Computer USA, Inc.. (Garnett, Terry) (Entered: 12/18/2001)
12/18/2001	58	Proposed Order *Re Motion to Compel Plaintiff LG Electronics, Inc. to Amend Its Claim Chart and for Protective Order* by Q-Lity Computer Inc., Quanta Computer Inc., Quanta Computer USA, Inc.. (Garnett, Terry) (Entered: 12/18/2001)
12/19/2001	60	EXHIBITS A through E to the declaration of Maxwell A. Fox re 56 filed by Q-Lity Computer Inc., Quanta Computer Inc., Quanta Computer USA, Inc.. (Related document(s)56) (cp,) Modified on 12/19/2001 (cp,). (Entered: 12/19/2001)

***

12/26/2001 65 Second Discovery ORDER by Mag. Judge Bernard Zimmerman; plaintff shall provide amended set of disclosures by 12/28/01; if parties cannot resolve their disputes, either party may refile its previously filed motion for hearing on 1/30/02 at 10:00; opposition briefs due 1/16/02; reply due 1/22/02 (kc,) (Entered: 01/07/2002)

***

02/07/2002 111 STIPULATION AND ORDER re: amendment to stipulated protective order. Signed by Judge Claudia Wilken on 2/7/02. (cp,) (Entered: 02/12/2002)

***

03/15/2002 114 *Joint Claim Construction and prehearing statement pursuant to Patent L.R. 4-3* by LG Electonics Inc., Q-Lity Computer Inc., Quanta Computer Inc., Quanta Computer USA, Inc.. (kc,) (Entered: 03/19/2002)

***

03/20/2002 118 INDEX *of terms, phrases, or clauses to be construed in connection with the joint claim construction and*

prehearing statement pursuant to patent L.R. 4-3 by Q-Lity Computer Inc., Quanta Computer Inc., Quanta Computer USA, Inc.. (kc,) (Entered: 03/26/2002)

***

04/29/2002 135 Brief *(opening claim construction)* filed by LG Electonics Inc.. (cp,) (Entered: 05/01/2002)

04/29/2002 136 Appendix re [135] *(Volume I)* filed by LG Electonics Inc.. (Related document(s)[135]) (cp,) (Entered: 05/01/2002)

04/29/2002 137 Appendix re [135] *(Volume II)* filed by LG Electonics Inc.. (Related document(s)[135]) (cp,) (Entered: 05/01/2002)

04/29/2002 138 Appendix re [135] *(Volume III)* filed by LG Electonics Inc.. (Related document(s)[135]) (cp,) (Entered: 05/01/2002)

04/29/2002 139 Appendix re [135] *(Volume IV)* filed by LG Electonics Inc.. (Related document(s)[135]) (cp,) (Entered: 05/01/2002)

04/29/2002 140 Appendix re [135] *(Volume V)* filed by LG Electonics Inc.. (Related

document(s)[135]) (cp,) (Entered: 05/01/2002)

04/29/2002 141 DECLARATION in Support re [135] *(by David M. Morris)* filed by LG Electonics Inc.. (Related document(s)[135]) (cp,) (Entered: 05/01/2002)

04/29/2002 142 DECLARATION in Support *(by Alan Jay Smith Ph.D) to assist the court in understanding the technology of the patents in suit* filed by LG Electonics Inc.. (cp,) (Entered: 05/01/2002)

***

05/03/2002 144 MOTION FOR PARTIAL SUMMARY JUDGMENT as to *certain Quanta's product* filed by Q-Lity Computer Inc., Quanta Computer Inc., Quanta Computer USA, Inc.. Motion Hearing set for 6/7/2002 10:00 AM. (cp,) (Entered: 05/07/2002)

05/03/2002 145 DECLARATION in Support re [144] *(by Maxwell A. Fox)* filed by Q-Lity Computer Inc., Quanta Computer Inc., Quanta Computer USA, Inc.. (Related document(s)[144]) (cp,) (Entered: 05/07/2002)

05/03/2002 146 DECLARATION in Support re [144] *(by Danny Tang)* filed by Q-Lity Computer Inc., Quanta Computer Inc., Quanta Computer USA, Inc.. (Related document(s)[144]) (cp,) (Entered: 05/07/2002)

05/03/2002 147 DECLARATION in Support re [144] *(by Le-Chin Chang)* filed by Q-Lity Computer Inc., Quanta Computer Inc., Quanta Computer USA, Inc.. (Related document(s)[144]) (cp,) (Entered: 05/07/2002)

***

05/03/2002 Proposed Order *re [144]* by Q-Lity Computer Inc., Quanta Computer Inc., Quanta Computer USA, Inc.. (cp,) (Entered: 05/07/2002)

05/03/2002 149 MOTION to Seal Document *certain pages of motion [144], Exhibits A & B to [145]* filed by Q-Lity Computer Inc., Quanta Computer Inc., Quanta Computer USA, Inc.. (cp,) (Entered: 05/07/2002)

***

05/09/2002 151 Joinder *in motions of Quanta and Asustek for summary judgment* by Everex Systems. (cp,) Modified on 5/10/2002 (cp,). (Entered: 05/10/2002)

05/13/2002 152 JOINT MEMORANDUM *re: claim construction* filed by defendants Asustek, et al (cp,) Modified on 5/16/2002 (cp,). (Entered: 05/16/2002)

05/13/2002 153 DECLARATION in Support re [152] *(by Vid Bhakar)* filed by Asustek, et al (Related document(s)[152]) (cp,) Modified on 5/16/2002 (cp,). (Entered: 05/16/2002)

05/13/2002 154 OBJECTIONS to *declaration of Alan Jay Smith, and motion to strike same filed by defendants Asustek, et al.* (cp,) (Entered: 05/16/2002)

***

05/17/2002 156 Cross MOTION for Summary Judgment *and in OPPOSITION to defendants' motion for partial summary judgment on the defenses of patent exhaustion and implied license* ****REDACTED VERSION**** filed by LG Electonics Inc.. Motion Hearing set for 6/7/2002 10:00 AM. (cp,) (Entered: 05/21/2002)

05/17/2002 157 DECLARATION in Support re [156] *(by David M. Morris)* filed by LG Electonics Inc.. (Related document(s)[156]) (cp,) (Entered: 05/21/2002)

05/17/2002 158 DECLARATION in Support re [156] *(by Alan Jay Smith, Ph.D.)* filed by LG Electonics Inc.. (Related document(s)[156]) (cp,) (Entered: 05/21/2002)

05/17/2002 159 DECLARATION in Support re [156] *(by Joseph C. McAlexander III)* filed by LG Electonics Inc.. (Related document(s)[156]) (cp,) (Entered: 05/21/2002)

***

05/17/2002 162 MOTION to Seal Document *cross-motion and opposition to motion for summary judgment* filed by LG Electonics Inc.. (cp,) (Entered: 05/21/2002)

05/17/2002 163 DECLARATION in Support re [162] *(by Russell L. Johnson)* filed by LG Electonics Inc.. (Related document(s)[162]) (cp,) (Entered: 05/21/2002)

***

05/20/2002 165 Joinder *to objections to declaration of Alan Jay Smith and motion to strike filed by defendants Q-Lity, et al.* (cp,) (Entered: 05/22/2002)

05/20/2002 166 Responsive claim construction brief filed by Q-Lity Computer Inc.. (cp,)

Modified on 5/22/2002 (cp,). (Entered: 05/22/2002)

05/20/2002 167 DECLARATION in Support re [166] *(by Maxwell A. Fox)* filed by Q-Lity Computer Inc.. (Related document(s)[166]) (cp,) (Entered: 05/22/2002)

05/20/2002 168 DECLARATION *(by Jean-Luc Gaudiot, Ph.D.) offered as background tutorial to the technology of the patents in suit* filed by Q-Lity Computer Inc.. (cp,) Modified on 5/22/2002 (cp,). (Entered: 05/22/2002)

05/22/2002 169 Memorandum in Opposition re [160] filed by Q-Lity Computer Inc., Quanta Computer Inc., Quanta Computer USA, Inc.. (kc,) (Entered: 05/24/2002)

***

05/24/2002 170 ORDER by Judge Claudia Wilken granting [149] Motion to Seal Document (cp,) (Entered: 05/29/2002)

05/24/2002 172 MEMORANDUM in Support re [144] (PAGES 2,3,6-8,10,12,14-16) ***UNDER SEAL*** filed by Q-Lity Computer Inc., Quanta Computer Inc., Quanta Computer USA, Inc.. (Related

document(s)[144]) (cp,) Modified on 5/29/2002 (cp,). (Entered: 05/29/2002)

05/24/2002 173 EXHIBITS re [145] *(A) ***UNDER SEAL**** filed by Q-Lity Computer Inc., Quanta Computer Inc., Quanta Computer USA, Inc.. (Related document(s)[145]) (cp,) (Entered: 05/29/2002)

05/24/2002 175 ORDER by Judge Claudia Wilken granting [162] Motion to Seal Document (cp,) (Entered: 05/31/2002)

05/24/2002 176 Cross MOTION FOR PARTIAL SUMMARY JUDGMENT as to *patent exhaustion and implied license; OPPOSITION to defendants' motion for partial summary ***FILED UNDER SEAL**** filed by LG Electonics Inc.. Motion Hearing set for 6/7/2002 10:00 AM. (cp,) (Entered: 05/31/2002)

***

05/24/2002 178 MOTION to preclude untimely new constructions, and strike arguments filed by LG Electonics Inc.. Motion Hearing set for 6/28/2002 10:00 AM. (cp,) (Entered: 05/31/2002)

05/24/2002 179 DECLARATION in Support re [178] *(by Collin W. Park)* filed by LG Electonics Inc.. (Related

document(s)[178]) (cp,) (Entered: 05/31/2002)

***

05/24/2002 181 Reply Memorandum to Motion re [144] , *and OPPOSITION to cross-motions [156],[176]* filed by Q-Lity Computer Inc., Quanta Computer Inc., Quanta Computer USA, Inc.. (cp,) (Entered: 05/31/2002)

05/29/2002 171 AMENDED ORDER granting motion re [149] to file documents under seal . Signed by Judge Claudia Wilken on 5/29/02. (cp,) (Entered: 05/29/2002)

05/29/2002 174 EXHIBITS re [145] *(B) ***UNDER SEAL**** filed by Q-Lity Computer Inc., Quanta Computer Inc., Quanta Computer USA, Inc.. (Related document(s)[145]) (cp,) (Entered: 05/29/2002)

05/29/2002 182 Brief *(REPLY CLAIM CONSTRUCTION)* filed by LG Electonics Inc.. (cp,) (Entered: 06/03/2002)

05/29/2002 183 DECLARATION in Support re [182] *(by Collin W. Park)* filed by LG Electonics Inc.. (Related document(s)[182]) (cp,) (Entered: 06/03/2002)

***

05/31/2002 185 Reply Memorandum to Motion re [176] filed by LG Electonics Inc.. (kc,) (Entered: 06/05/2002)

***

06/07/2002 189 Memorandum in Opposition re [178] filed by Q-Lity Computer Inc., Quanta Computer Inc., Quanta Computer USA, Inc.. (kc,) (Entered: 06/12/2002)

06/07/2002 190 Memorandum in Opposition re [178] filed by defendants. (kc,) Modified on 6/12/2002 (kc,). (Entered: 06/12/2002)

06/07/2002 191 DECLARATION in Support re [190] *by John V. Komar* filed by defendants. (Related document(s)[190]) (kc,) Modified on 6/12/2002 (kc,). (Entered: 06/12/2002)

***

06/14/2002 193 Reply Memorandum to Motion re [178] filed by LG Electonics Inc.. (cp,) (Entered: 06/19/2002)

06/14/2002 194 DECLARATION in Support re [193] *(by David M. Morris)* filed by LG Electonics Inc.. (Related document(s)[193]) (cp,) (Entered: 06/19/2002)

***

06/14/2002 204 Minute Entry: Motion Hearing re [176], [144], [156] held on 6/14/2002 before Judge Claudia Wilke; motions under submission. (Court Reporter Raynee Mercado.) (cp,) (Entered: 07/22/2002)

***

07/08/2002 197 MOTION for leave to bring supplemental authority to the Court's attention filed by LG Electonics Inc.. (kc,) (Entered: 07/08/2002)

***

07/08/2002 199 Minute Entry: Claim Construction Hearing held on 6/28/2002 before Judge Claudia Wilken. Matter taken under submission. (Court Reporter Raynee Mercado.) (kc,) (Entered: 07/10/2002)

07/08/2002 200 TRANSCRIPT for dates 8/3/01 *C/R: Joan Marie Columbini.* (kc,) (Entered: 07/10/2002)

07/10/2002 201 Memorandum in Opposition re [197] filed by Asustek Computer. (cp,) Modified on 7/16/2002 (cp,). (Entered: 07/16/2002)

***

07/10/2002 203 Memorandum in Opposition re [197] filed by Quanta Computer Inc.. (cp,) (Entered: 07/16/2002)

***

07/25/2002 206 ORDER by Judge Claudia Wilken granting [197] Motion for leave to bring supplemental authority to the court's attention (cp,) (Entered: 07/31/2002)

***

08/20/2002 208 ORDER construing disputed terms and phrases by Judge Claudia Wilken DENYING LG Electronics motion to preclude [178] (kc,) (Entered: 08/21/2002)

08/20/2002 209 ORDER by Judge Claudia Wilken GRANTING defendants' motion for partial summary judgment [144]; DENYING plaintiff's cross motion for summary judgment [156],[176] (kc,) (Entered: 08/21/2002)

***

09/20/2002 216 DECLARATION in Support re [156] *(by David M. Morris)* filed by LG Electonics Inc.. (Related document(s)[156]) (cp,) (Entered: 09/25/2002)

09/20/2002 217 Reply to Opposition *re: non-parties Avance Logic Inc and Realtek Semiconductor Corp.'s motion to quash* filed by non-parties Avance Logic Inc and Realtek Semiconductor Corp.. (cp,) Modified on 9/25/2002 (cp,). (Entered: 09/25/2002)

09/20/2002 218 DECLARATION in Support re [217] *(by Robert B. Dulaney III)* filed by non-parties Avance Logic Inc and Realtek Semiconductor Corp.. (Related document(s)[217]) (cp,) Modified on 9/25/2002 (cp,). (Entered: 09/25/2002)

***

10/04/2002 228 MOTION to Compel *discovery* filed by LG Electonics Inc.. Motion Hearing set for 10/21/2002 10:00 AM. (kc,) (Entered: 10/08/2002)

10/04/2002 229 DECLARATION in Support *of motion to compel discovery [228] by David M. Morris* filed by LG Electonics Inc.. (kc,) (Entered: 10/08/2002)

10/04/2002 230 DECLARATION in Support *of motion to compel discovery [228] by Alan Jay Smith, PH.D.* filed by LG Electonics Inc.. (kc,) (Entered: 10/08/2002)

***

10/18/2002 242 Memorandum in Opposition re [228] ****REDACTED VERSION**** filed by Q-Lity Computer Inc., Quanta Computer Inc., Quanta Computer USA, Inc.. (cp,) (Entered: 10/23/2002)

10/18/2002 243 DECLARATION in Support re [242] *(by Maxwell A. Fox)* ****REDACTED VERSION**** filed by Q-Lity Computer Inc., Quanta Computer Inc., Quanta Computer USA, Inc.. (Related document(s)[242]) (cp,) (Entered: 10/23/2002)

***

10/18/2002 245 DECLARATION in Support re [242] *(by Hsiao-Ti Lee)* filed by Q-Lity Computer Inc., Quanta Computer Inc., Quanta Computer USA, Inc.. (Related document(s)[242]) (cp,) (Entered: 10/23/2002)

***

10/22/2002 248 MOTION to Amend/Correct *patent contentions* ****REDACTED VERSION**** filed by LG Electonics Inc.. Motion Hearing set for 12/4/2002 10:00 AM. (cp,) (Entered: 10/24/2002)

10/22/2002 249 DECLARATION in Support re [248] *(by David M. Morris)* ******REDACTED VERSION****** filed by LG Electonics Inc.. (Related document(s)[248]) (cp,) (Entered: 10/24/2002)

***

10/22/2002 252 Memorandum in Opposition re [228] ******UNDER SEAL****** filed by Q-Lity Computer Inc., Quanta Computer Inc., Quanta Computer USA, Inc.. (cp,) (Entered: 10/28/2002)

10/22/2002 253 DECLARATION in Support re [252] *(by Maxwell A. Fox)* ******UNDER SEAL****** filed by Q-Lity Computer Inc., Quanta Computer Inc., Quanta Computer USA, Inc.. (Related document(s)[252]) (cp,) (Entered: 10/28/2002)

***

10/23/2002 269 MOTION to Amend/Correct *patent L.R. 3-6(a) contentions* filed by LG Electonics Inc.. (kc,) ***FILED UNDER SEAL*** (Entered: 11/08/2002)

10/23/2002 270 DECLARATION in Support *of motion to amend [269] by David M. Morris* filed by LG Electonics Inc..

(kc,) ***FILED UNDER SEAL*** (Entered: 11/08/2002)

***

10/30/2002 257 STIPULATION AND ORDER for amendment to stipulated protective order. Signed by Judge Claudia Wilken on 10/30/02. (kc,) (Entered: 11/01/2002)

***

11/01/2002 261 Reply Memorandum in support of motion to compel discovery [228] filed by LG Electonics Inc. (kc,) Modified on 11/7/2002 (kc,) (Entered: 11/07/2002)

11/01/2002 262 DECLARATION in Support *of reply memorandum [261] by David M. Morris* filed by LG Electonics Inc. (kc,) ***REDACTED VERSION*** (Entered: 11/07/2002)

***

11/04/2002 264 Memorandum in Opposition re [248] filed by Q-Lity Computer Inc., Quanta Computer Inc., Quanta Computer USA, Inc.. (kc,) (Entered: 11/07/2002)

11/04/2002 265 DECLARATION in Support *of opposition [264] by Oliver Chu* filed

by Q-Lity Computer Inc., Quanta Computer Inc., Quanta Computer USA, Inc.. (kc,) (Entered: 11/07/2002)

11/04/2002 266 DECLARATION in Support *of opposition [264] by Maxwell A. Fox* filed by Q-Lity Computer Inc., Quanta Computer Inc., Quanta Computer USA, Inc.. (kc,) (Entered: 11/07/2002)

***

11/05/2002 267 NOTICE *of entry of order [257]* by LG Electonics Inc.. (kc,) (Entered: 11/07/2002)

***

11/07/2002 275 DECLARATION in Support re [261] *(by David M. Morris) ***UNDER SEAL**** filed by LG Electonics Inc.. (Related document(s)[261]) (cp,) (Entered: 11/13/2002)

***

11/12/2002 278 Reply Memorandum to Motion re [248] ****REDACTED VERSION**** filed by LG Electonics Inc.. (kc,) (Entered: 11/13/2002)

11/12/2002 279 DECLARATION in Support *of reply memorandum [278] by Collin w. Park ****REDACTED VERSION****

filed by LG Electonics Inc.. (kc,) (Entered: 11/13/2002)

***

11/12/2002 294 Minute Entry: Further Case Management Conference, and motion hearing held on 11/8/2002 before Judge Claudia Wilken(Court Reporter Diane Skillman.) (cp,) (Entered: 11/20/2002)

***

11/13/2002 282 Opposition *to motion of Apple Computer, Inc. to intervene* by LG Electonics Inc.. (kc,) Modified on 11/14/2002 (kc,). (Entered: 11/14/2002)

***

11/13/2002 285 Opposition *to Apple Computer Inc.'s motion for protective order and motion to quash* by LG Electonics Inc.. (kc,) Modified on 11/14/2002 (kc,) (Entered: 11/14/2002)

11/13/2002 286 DECLARATION in Support *of opposition [285] by David M. Morris* filed by LG Electonics Inc.. (kc,) (Entered: 11/14/2002)

***

11/14/2002 292 Reply Memorandum to Motion re [248], [269] ******UNDER SEAL****** filed by LG Electonics Inc.. (cp,) (Entered: 11/20/2002)

11/14/2002 293 DECLARATION in Support re [292] ******UNDER SEAL****** filed by LG Electonics Inc.. (Related document(s)[292]) (cp,) (Entered: 11/20/2002)

***

11/18/2002 296 MOTION to Compel *further responses to interrogatories, further production of documents, and to compel plaintiff to provide a rule 30(B)(6) witness* filed by Q-Lity Computer Inc., Quanta Computer Inc., Quanta Computer USA, Inc.. Motion Hearing set for 12/3/2002 09:30 AM. (cp,) (Entered: 11/25/2002)

11/18/2002 297 DECLARATION in Support re [296] (*by Maxwell A. Fox*) filed by Q-Lity Computer Inc., Quanta Computer Inc., Quanta Computer USA, Inc.. (Related document(s)[296]) (cp,) (Entered: 11/25/2002)

***

11/25/2002 312 OPPOSITION to *Apple Computer's motion for protective order and to quash deposition subpoena* filed by

LG Electronics Inc. (cp,) Modified on 12/3/2002 (cp,). Modified on 12/3/2002 (cp,). (Entered: 12/03/2002)

11/25/2002 313 DECLARATION in Support re [312] *(by David M. Morris)* filed by LG Electonics Inc.. (Related document(s)[312]) (cp,) (Entered: 12/03/2002)

***

12/03/2002 315 Minute Entry: Motion Hearing re [248], [269] held on 12/3/2002 before Magistrate Judge Elizabeth D. Laporte. (Court Reporter Leo Mankiewicz.) (cp,) (Entered: 12/06/2002)

12/03/2002 316 Memorandum in Opposition re [296] filed by LG Electonics Inc.. (cp,) (Entered: 12/06/2002)

12/03/2002 317 DECLARATION in Support re [316] *(by Collin W. Park)* filed by LG Electonics Inc.. (Related document(s)[316]) (cp,) (Entered: 12/06/2002)

***

12/04/2002 319 JOINT OPPOSITION to *plaintiff's motion for reconsideration of the court's ruling on partial summary judgment and response to request for*

		additional briefing filed by defendants (cp,) Modified on 12/10/2002 (cp,). (Entered: 12/10/2002)
12/04/2002	320	DECLARATION in Support re [319] *(by Maxwell A. Fox)* filed by Q-Lity Computer Inc., Quanta Computer Inc., Quanta Computer USA, Inc.. (Related document(s)[319]) (cp,) (Entered: 12/10/2002)
12/04/2002	321	MOTION to Seal Document *joint brief and the Fox declaration* filed by Q-Lity Computer Inc., Quanta Computer Inc., Quanta Computer USA, Inc.. (cp,) (Entered: 12/10/2002)
		***
12/05/2002	323	ORDER by Judge Elizabeth D. Laporte denying and deferring ruling [228] Motion to Compel, granting in part and denying in part [248],[269] Motion to Amend/Correct, granting motion for protective order and motion to quash, granting motion to intervene (cp,) (Entered: 12/10/2002)
12/09/2002	327	ORDER granting motion to seal joint opposition to motion for reconsideration, and declaration of Maxwell A. Fox. Signed by Judge

Claudia Wilken on 12/9/02. (cp,) (Entered: 12/13/2002)

12/09/2002 328 JOINT OPPOSITION ***UNDER SEAL*** by Q-Lity Computer Inc., Quanta Computer Inc., Quanta Computer USA, Inc. et al. (cp,) Modified on 12/13/2002 (cp,). (Entered: 12/13/2002)

12/09/2002 329 DECLARATION in Support re [328] ***UNDER SEAL*** filed by Q-Lity Computer Inc., Quanta Computer Inc., Quanta Computer USA, Inc., et al. (Related document(s)[328]) (cp,) Modified on 12/13/2002 (cp,). (Entered: 12/13/2002)

12/10/2002 324 Reply Memorandum to Motion re [296] filed by Q-Lity Computer Inc., Quanta Computer Inc., Quanta Computer USA, Inc.. (cp,) (Entered: 12/11/2002)

12/10/2002 325 DECLARATION in Support re [324] *(by Jennifer B. Hodur)* filed by Q-Lity Computer Inc., Quanta Computer Inc., Quanta Computer USA, Inc.. (Related document(s)[324]) (cp,) (Entered: 12/11/2002)

12/11/2002 326 Brief *(additional) in connection with cross-motion for partial summary judgment [156]* filed by LG Electonics Inc.. (kc,) (Entered: 12/12/2002)

***

12/16/2002 331 MOTION to Compel *discovery from defendants Q-Lity Computer Inc., Quanta Computer Inc., Quanta Computer USA, Inc.*, filed by LG Electonics Inc.. Motion Hearing set for 2/4/2003 09:30 AM. (kc,) (Entered: 12/17/2002)

12/16/2002 332 DECLARATION in Support *of motion to compel [331] by Collin W. Park* filed by LG Electonics Inc.. (kc,) Modified on 1/29/2003 (cp,).***FILED UNDER SEAL PER ORDER #357*** (Entered: 12/17/2002)

***

01/03/2003 335 TRANSCRIPT for dates 10/16/02 (C/R: Diane E. Skillman). (cp,) (Entered: 01/08/2003)

01/03/2003 336 TRANSCRIPT for dates 11/8/02 (C/R: Diane E. Skillman). (cp,) (Entered: 01/08/2003)

***

01/14/2003 341 Memorandum in Opposition re [331] filed by Q-Lity Computer Inc., Quanta Computer Inc., Quanta Computer USA, Inc.. (kc,) (Entered: 01/16/2003)

01/14/2003 342 DECLARATION in Support *of opposition [341] by Maxwell A. Fox* filed by Q-Lity Computer Inc., Quanta Computer Inc., Quanta Computer USA, Inc.. (kc,) (Entered: 01/16/2003)

01/14/2003 343 DECLARATION in Support *of opposition [341] by Kenny Chung* filed by Q-Lity Computer Inc., Quanta Computer Inc., Quanta Computer USA, Inc.. (kc,) (Entered: 01/16/2003)

01/14/2003 344 DECLARATION in Support *of opposition [341] by Song-Feng Yang* filed by Q-Lity Computer Inc., Quanta Computer Inc., Quanta Computer USA, Inc.. (kc,) (Entered: 01/16/2003)

***

01/14/2003 346 Minute Entry: Motion Hearing re [296] held on 12/3/2002 before Elizabeth D. Laporte. (Court Reporter Juanita Gonzalez.) (cp,) (Entered: 01/17/2003)

01/15/2003	347	ORDER by Judge Elizabeth D. Laporte granting in part and denying in part [296] Motion to Compel (cp,) (Entered: 01/17/2003)
		***
01/17/2003	349	Memorandum in Opposition re [331] ***UNDER SEAL*** filed by Q-Lity Computer Inc., Quanta Computer Inc., Quanta Computer USA, Inc.. (cp,) (Entered: 01/22/2003)
01/17/2003	350	DECLARATION in Support re [349] ***UNDER SEAL*** filed by Q-Lity Computer Inc., Quanta Computer Inc., Quanta Computer USA, Inc.. (Related document(s)[349]) (cp,) (Entered: 01/22/2003)
01/21/2003	351	Reply to Opposition re [331] filed by LG Electonics Inc.. (cp,) (Entered: 01/23/2003)
01/21/2003	352	DECLARATION in Support re [351] *(by David M. Morris)* filed by LG Electonics Inc.. (Related document(s)[351]) (cp,) (Entered: 01/23/2003)
		***
01/30/2003	358	ORDER by Judge Elizabeth D. Laporte granting in part and denying

in part [331] Motion to Compel (cp,) (Entered: 02/03/2003)

02/06/2003 359 ORDER clarifying, and reaffirms its order of 8/20/02; order granting in part defendants' motion for summary adjudication and granting in part plaintiff's motion for summary adjudication. Signed by Judge Claudia Wilken on 2/6/03. (cp,) (Entered: 02/07/2003)

02/21/2003 360 Joint MOTION for clarification of order granting in part and denying in part defendants' motion for partial summary judgment and granting in part plaintiff's motion for partial summary judgment filed by Q-Lity Computer Inc., Quanta Computer Inc., Quanta Computer USA, Inc.. Motion Hearing set for 3/28/2003 10:00 AM. (kc,) (Entered: 02/25/2003)

02/26/2003 361 MOTION to Strike *from the argument calendar defendants' joint motion for clarification* filed by LG Electonics Inc.. (cp,) (Entered: 02/28/2003)

***

02/27/2003 363 SCHEDULING ORDER: the Court will not address LGE's motion to compel until defendants' motion for

clarification is resolved. Signed by Judge Elizabeth D. Laporte on 2/26/03. (kc,) (Entered: 03/04/2003)

03/03/2003 364 Memorandum in Opposition re [361] *(joint)* filed by Q-Lity Computer Inc., Quanta Computer Inc., Quanta Computer USA, Inc.. (cp,) (Entered: 03/05/2003)

03/03/2003 365 TRANSCRIPT for dates 12/3/02; C/R: Leo T. Mankiewicz. (cp,) (Entered: 03/05/2003)

03/06/2003 366 ORDER by Judge Claudia Wilken granting [361] Motion to Strike, and treating motion [360] as leave to file a motion for reconsideration (cp,) (Entered: 03/10/2003)

***

03/14/2003 369 MOTION to Amend/Correct *Quanta defendants' final invalidity contentions* filed by Q-Lity Computer Inc., Quanta Computer Inc., Quanta Computer USA, Inc.. Motion Hearing set for 4/18/2003 10:00 AM. (cp,) (Entered: 03/18/2003)

03/14/2003 370 DECLARATION in Support re [369] *(by Vincent K. Yip)* filed by Q-Lity Computer Inc., Quanta Computer Inc., Quanta Computer USA, Inc..

(Related document(s)[369]) (cp,) (Entered: 03/18/2003)

***

03/20/2003 374 ORDER GRANTING in part and DENYING in part the motion to compel discovery [228]. Signed by Judge Elizabeth D. Laporte on 3/20/03. (kc,) (Entered: 03/24/2003)

***

03/24/2003 380 Notice of joinder and Joinder re [369] by Asustek Computer Inc., Asus Computer International Inc., First International Computer, Inc., and First International Computer of America, Inc. (kc,) Modified on 3/25/2003 (kc,). (Entered: 03/25/2003)

03/28/2003 381 Memorandum in Opposition re [369] filed by LG Electonics Inc.. (kc,) (Entered: 03/31/2003)

03/28/2003 382 DECLARATION in Support *of opposition [381] by Thomas E. Nelson* filed by LG Electonics Inc.. (kc,) (Entered: 03/31/2003)

***

03/28/2003 384 MOTION for Leave to File *a separate motion for partial summary judgment that defendants' Intel-*

based products infringe the asserted method claims of the '645, '733 and '379 patents based on judicial estoppel filed by LG Electonics Inc.. (kc,) (Entered: 03/31/2003)

***

04/02/2003 386 Memorandum in Opposition re [384] filed by Q-Lity Computer Inc., Quanta Computer Inc., Quanta Computer USA, Inc.. (kc,) (Entered: 04/07/2003)

***

04/03/2003 391 MOTION for clarification of order granting in part and denying in part the motion to compel discovery filed by LG Electonics Inc.. Motion Hearing set for 5/13/2003 09:30 AM. (kc,) (Entered: 04/07/2003)

***

04/03/2003 393 CLERK'S NOTICE taking Q-Lity, et al's motion [369] to amend Quanta defendants' final invalidity contentions, and defendants Asustek Computer, et al joinder; vacating 4/18/03 hearing (cp,) (Entered: 04/08/2003)

04/04/2003 394 ORDER by Judge Claudia Wilken denying [384] Motion for Leave to

File a separate motion for partial summary judgment (cp,) (Entered: 04/08/2003)

04/04/2003 395 Reply Memorandum to Motion re [369] filed by Q-Lity Computer Inc., Quanta Computer Inc., Quanta Computer USA, Inc.. (cp,) (Entered: 04/08/2003)

***

04/09/2003 397 Joinder re [369] by Bizcom, et al. (cp,) Modified on 4/11/2003 (cp,). (Entered: 04/11/2003)

***

04/16/2003 401 STIPULATION AND ORDER addendum to stipulated protective order. Signed by Judge Elizabeth LaPorte on 4/16/03. (oh,) (Entered: 04/21/2003)

***

04/21/2003 403 STIPULATION AND ORDER for addendum to stipulated protective order. Signed by Judge Claudia Wilken on 4/21/03. (oh,) (Entered: 04/22/2003)

04/21/2003 404 ORDER by Judge Claudia Wilken DENYING motion to amend defendants' final invalidity

contentions [369] (kc,) (Entered: 04/23/2003)

***

04/22/2003 408 Memorandum in Opposition re [391] filed by Q-Lity Computer Inc., Quanta Computer Inc., Quanta Computer USA, Inc.. (kc,) (Entered: 04/23/2003)

04/22/2003 409 DECLARATION in Support *of opposition [408] by Terry D. Garnett* filed by Q-Lity Computer Inc., Quanta Computer Inc., Quanta Computer USA, Inc.. (kc,) (Entered: 04/23/2003)

04/22/2003 Received Order *denying motion for clarification* by Q-Lity Computer Inc., Quanta Computer Inc., Quanta Computer USA, Inc.. (kc,) (Entered: 04/23/2003)

***

04/25/2003 413 MOTION for Leave to File *motion for reconsideration based on emergence of new material facts* filed by Q-Lity Computer Inc., Quanta Computer Inc., Quanta Computer USA, Inc.. (cp,) Modified on 4/30/2003 (cp,). (Entered: 04/30/2003)

04/25/2003 414 DECLARATION in Support re [413] *(by Maxwell A. Fox)* filed by Q-Lity Computer Inc., Quanta Computer Inc., Quanta Computer USA, Inc.. (Related document(s)[413]) (cp,) (Entered: 04/30/2003)

04/25/2003 Received Order re [413] by Q-Lity Computer Inc., Quanta Computer Inc., Quanta Computer USA, Inc.. (cp,) (Entered: 04/30/2003)

04/25/2003 415 Joint MOTION for an order certifying for immediate appeal portions of the court's 2/6/03 order re [359] filed by Q-Lity Computer Inc., Quanta Computer Inc., Quanta Computer USA, Inc.. Motion Hearing set for 5/30/2003 10:00 AM. (cp,) (Entered: 04/30/2003)

***

04/29/2003 418 Reply Memorandum to Motion re [391] filed by LG Electonics Inc.. (kc,) (Entered: 04/30/2003)

04/29/2003 419 DECLARATION in Support *of reply [418] by Collin W. Park* filed by LG Electonics Inc.. (kc,) (Entered: 04/30/2003)

***

05/02/2003	423	ORDER by Judge Elizabeth D. Laporte vacating and denying [391] Motion for clarification of 3/20/03 order granting in part and denying in part LG's motion to compel discovery (cp,) (Entered: 05/08/2003)
		***
05/09/2003	427	Memorandum in Opposition re [415] filed by LG Electonics Inc.. (kc,) (Entered: 05/13/2003)
		***
05/16/2003	435	Reply Memorandum to Motion re [415] filed by defendants Quanta Computer Inc., et al. (cp,) Modified on 5/19/2003 (cp,). (Entered: 05/19/2003)
		***
05/16/2003	437	ORDER by Judge Claudia Wilken denying [413] Motion for reconsideration (cp,) (Entered: 05/19/2003)
05/16/2003	438	CLERK'S NOTICE taking motion [360] under submission; 5/30/03 hearing is vacated; further case management conference will remain on calendar for 1:30pm on 5/30/03 (cp,) (Entered: 05/19/2003)

***

06/17/2003 442 MOTION to Compel *Serverworks Corporation to produce documents and testimony* filed by LG Electonics Inc.. Motion Hearing set for 7/29/2003 09:30 AM. (kc,) (Entered: 06/18/2003)

06/17/2003 443 DECLARATION in Support *of motion to compel [442] by William K. Hoffman* filed by LG Electonics Inc.. (kc,) (Entered: 06/18/2003)

06/17/2003 444 DECLARATION in Support *of motion to compel [442[by Joseph C. McAlexander* filed by LG Electonics Inc.. (kc,) (Entered: 06/18/2003)

06/17/2003 445 DECLARATION in Support *of motion to compel [442] by David M. Morris* filed by LG Electonics Inc.. (kc,) (Entered: 06/18/2003)

06/17/2003 446 DECLARATION in Support *of motion to compel [442] by Elizabeth R. Potts* filed by LG Electonics Inc.. (kc,) (Entered: 06/18/2003)

***

06/18/2003 448 MOTION to Compel *discovery from Intel Corporation ***REDACTED VERSION**** filed by LG Electonics Inc.. Motion Hearing set for 7/29/2003 09:30 AM. (kc,) (Entered: 06/18/2003)

06/18/2003 449 DECLARATION in Support *of motion to compel discovery from Intel [448] by Thomas E. Nelson* ***REDACTED VERSION*** filed by LG Electonics Inc.. (kc,) (Entered: 06/18/2003)

***

06/18/2003 453 MOTION to Compel *discovery from Via Technologies, Inc. and S3 Graphics, Inc.* filed by LG Electonics Inc.. Motion Hearing set for 7/29/2003 09:30 AM. (kc,) (Entered: 06/18/2003)

06/18/2003 454 DECLARATION in Support *of motion to compel [453] by David M. Morris* filed by LG Electonics Inc.. (kc,) (Entered: 06/18/2003)

06/18/2003 455 DECLARATION in Support *of motion to compel [453] by Collin W. Park* filed by LG Electonics Inc.. (kc,) (Entered: 06/18/2003)

***

07/01/2003 470 ORDER by Judge Claudia Wilken DENYING Motion for an order certifying for immediate appeal portions of the Court's 2/6/03 order [415] (kc,) (Entered: 07/10/2003)

***

07/03/2003 463 MOTION to Compel *discovery from Intel Corp* ******UNDER SEAL****** filed by LG Electonics Inc.. Motion Hearing set for 7/29/2003 09:30 AM. (cp,) (Entered: 07/08/2003)

07/03/2003 464 DECLARATION in Support re [463] *(by Thomas E. Nelson)* ******UNDER SEAL****** filed by LG Electonics Inc.. (Related document(s)[463]) (cp,) (Entered: 07/08/2003)

07/03/2003 465 ORDER recommending that the court appoint a special master to handle pending and future discovery matters. Signed by Judge Elizabeth D. Laporte on 7/2/03. (cp,) (Entered: 07/09/2003)

07/08/2003 466 Memorandum in Opposition re [463] filed by Intel Corporation. (kc,) Modified on 7/10/2003 (kc,). (Entered: 07/10/2003)

07/08/2003 467 DECLARATION in Support *of opposition [466] by Richard Malinowski* filed by Intel Corporation (kc,) Modified on 7/10/2003 (kc,). (Entered: 07/10/2003)

07/08/2003 468 DECLARATION of Alan P. Polaski filed by Intel Corporation. (kc,)

Modified on 7/10/2003 (kc,). (Entered: 07/10/2003)

***

07/08/2003 471 Memorandum in Opposition re [453], [463], [448], [442] , *and motion for protective order* filed by Q-Lity Computer Inc., Quanta Computer Inc., Quanta Computer USA, Inc.. (cp,) (Entered: 07/14/2003)

07/08/2003 472 MOTION to Seal Document *declaration of of Sai Gadiraju, and Exhibits A and B in support of opposition to LG's motion to compel* filed by Non-Party Serverworks Corp. Motion Hearing set for 8/5/2003 09:00 AM. (cp,) Modified on 7/14/2003 (cp,). (Entered: 07/14/2003)

07/08/2003 473 Memorandum in Opposition re [442] filed by Non-Party Serverworks Corp. (cp,) Modified on 7/14/2003 (cp,). (Entered: 07/14/2003)

07/08/2003 474 DECLARATION in Support re [473] *(by Sai Gadiraju)* *******REDACTED****** filed by Non-Party Serverworks Corp. (Related document(s)[473]) (cp,) Modified on 7/14/2003 (cp,). (Entered: 07/14/2003)

07/08/2003 475 DECLARATION in Support re [473] *(by Vriginia K. Demarchi)* filed by Non-Party Serverworks Corp. (Related document(s)[473]) (cp,) Modified on 7/14/2003 (cp,). (Entered: 07/14/2003)

***

07/08/2003 477 MOTION to shorten time for the hearing on defendants' opposition to LG's motions to compel discovery from non-parties Intel, Via and Serverworks *and*, MOTION for Protective Order filed by Q-Lity Computer Inc., Quanta Computer Inc., Quanta Computer USA, Inc.. (cp,) (Entered: 07/14/2003)

07/08/2003 478 DECLARATION in Support (by Maxwell A. Fox) re [477], and OPPOSITION re [448], [442], [453], [463] filed by Q-Lity Computer Inc., Quanta Computer Inc., Quanta Computer USA, Inc.. (Related document(s)[448], [442], [453], [477], [463]) (cp,) Modified on 7/14/2003 (cp,). (Entered: 07/14/2003)

07/08/2003 479 DECLARATION in Support re [477] *(by Rowena Young)* filed by Q-Lity Computer Inc., Quanta Computer Inc., Quanta Computer USA, Inc..

(Related document(s)[477]) (cp,) (Entered: 07/14/2003)

07/08/2003 480 Memorandum in Opposition re [453] filed by Non-Party Via Technologies and S3 Graphics. (cp,) Modified on 7/15/2003 (cp,). (Entered: 07/15/2003)

07/08/2003 481 DECLARATION in Support re [480] *(by Yiping Chen)* filed by Non-Party Via Technologies and S3 Graphics. (Related document(s)[480]) (cp,) Modified on 7/15/2003 (cp,). (Entered: 07/15/2003)

07/08/2003 482 DECLARATION in Support re [480] *(by Benjamin Pan)* filed by Non-Party Via Technologies and S3 Graphics. (Related document(s)[480]) (cp,) Modified on 7/15/2003 (cp,). (Entered: 07/15/2003)

07/08/2003 483 DECLARATION in Support re [480] *(by Daniel T. McCloskey)* filed by Non-Party Via Technologies and S3 Graphics. (Related document(s)[480]) (cp,) Modified on 7/15/2003 (cp,). (Entered: 07/15/2003)

***

07/11/2003 488 Memorandum in Opposition re [477] filed by LG Electonics Inc.. (cp,) (Entered: 07/15/2003)

07/11/2003 489 DECLARATION in Support re [488] *(by Thomas B. Kenworthy)* filed by LG Electonics Inc.. (Related document(s)[488]) (cp,) (Entered: 07/15/2003)

***

07/11/2003 491 REVISED REDACTED MOTION to Compel *discovery from Intel Corp* filed by LG Electonics Inc.. Motion Hearing set for 8/5/2003 09:30 AM. (cp,) Modified on 7/15/2003 (cp,). (Entered: 07/15/2003)

07/14/2003 492 NOTICE re [483] *of errata* by Non-Party Via Technologies and S3 Graphics. (cp,) Modified on 7/15/2003 (cp,). (Entered: 07/17/2003)

07/15/2003 493 MOTION to Seal Document *"reply in support of motion to compel discovery from Intel, declarations of Thomas E. Nelson, Robert A. Stillman"* filed by LG Electonics Inc.. (cp,) (Entered: 07/17/2003)

07/15/2003 494 DECLARATION in Support re [493] *(by Collin W. Park)* filed by LG Electonics Inc.. (Related document(s)[493]) (cp,) (Entered: 07/17/2003)

07/15/2003 495 Reply to Opposition re [491], [463] *******REDACTED****** filed by

LG Electonics Inc.. (cp,) (Entered: 07/17/2003)

07/15/2003 496 DECLARATION in Support re [495] *(by Robert A. Stillman)* ******REDACTED****** filed by LG Electonics Inc.. (Related document(s)[495]) (cp,) (Entered: 07/17/2003)

07/15/2003 497 DECLARATION in Support re [495] *(by Thomas E. Nelson)* ******REDACTED****** filed by LG Electonics Inc.. (Related document(s)[495]) (cp,) (Entered: 07/17/2003)

07/15/2003 498 Reply Memorandum to Motion re [442] filed by LG Electonics Inc.. (cp,) (Entered: 07/17/2003)

07/15/2003 499 DECLARATION in Support re [498] *(by Elizabeth R. Potts)* filed by LG Electonics Inc.. (Related document(s)[498]) (cp,) (Entered: 07/17/2003)

07/15/2003 500 DECLARATION in Support re [498] *(by William K. Hoffman)* filed by LG Electonics Inc.. (Related document(s)[498]) (cp,) (Entered: 07/17/2003)

***

07/15/2003 502 Reply to Opposition re [453] filed by LG Electonics Inc.. (cp,) (Entered: 07/17/2003)

07/15/2003 503 DECLARATION in Support re [502] *(by Robert A. Stillman)* filed by LG Electonics Inc.. (Related document(s)[502]) (cp,) (Entered: 07/17/2003)

07/15/2003 504 DECLARATION in Support re [453] *(by Collin W. Park) SUPPLEMENTAL* filed by LG Electonics Inc.. (Related document(s)[453]) (cp,) (Entered: 07/17/2003)

***

07/22/2003 518 Memorandum in Opposition re [477] filed by LG Electonics Inc.. (cp,) (Entered: 07/24/2003)

***

07/25/2003 521 ORDER ADOPTING REPORT AND RECOMMENDATIONS re [465] . Signed by Judge Claudia Wilken on 7/25/03. (cp,) (Entered: 07/28/2003)

***

07/28/2003 524 ORDER by Judge Elizabeth D. Laporte denying [477] Motion to

shorten time re: motion for protective order; vacating 8/5/03 hearing on all pending discovery motions (cp,) (Entered: 07/29/2003)

07/28/2003 525 ORDER by Judge Elizabeth D. Laporte granting [472] Motion to Seal Document (cp,) (Entered: 07/30/2003)

07/28/2003 526 DECLARATION in Support re [473] *(by Sai Gadiraju)* ******UNDER SEAL****** filed by Non-Party Serverworks Corp. (Related document(s)[473]) (cp,) Modified on 7/30/2003 (cp,). (Entered: 07/30/2003)

07/28/2003 527 ORDER by Judge Elizabeth D. Laporte granting [493] Motion to Seal Document (cp,) (Entered: 07/30/2003)

07/28/2003 528 Reply Memorandum to Motion re [491], [463] ******UNDER SEAL****** filed by LG Electonics Inc.. (cp,) (Entered: 07/30/2003)

07/28/2003 529 DECLARATION in Support re [528] *(by Thomas E. Nelson)* ******UNDER SEAL****** filed by LG Electonics Inc.. (Related document(s)[528]) (cp,) (Entered: 07/30/2003)

07/28/2003 530 DECLARATION in Support re [528] *(by Robert A. Stillman)* ******UNDER SEAL****** filed by

LG Electonics Inc.. (Related document(s)[528]) (cp,) (Entered: 07/30/2003)

***

08/28/2003 534 ORDER appointing Special Master Edward A. Infante for pending and further discovery disputes between the parties. Signed by Judge Claudia Wilken on 8/28/03. (cp,) (Entered: 08/29/2003)

***

08/29/2003 539 MOTION to Compel *discovery from LG Electronics, Inc. ***REDACTED VERSION*** filed by Q-Lity Computer Inc., Quanta Computer Inc., Quanta Computer USA, Inc.. (kc, COURT STAFF) Modified on 9/3/2003 (kc, COURT STAFF). (Entered: 09/03/2003)

08/29/2003 540 DECLARATION in Support re [539] *by Lisa M. Byerly* ***REDACTED VERSION*** filed by Q-Lity Computer Inc., Quanta Computer Inc., Quanta Computer USA, Inc.. (Related document(s)[539]) (kc, COURT STAFF) (Entered: 09/03/2003)

***

08/29/2003 544 MOTION to Compel *production of documents and continued 30(B)(6) deposition testimony from LG Electronics, Inc. ***REDACTED VERSION**** filed by Q-Lity Computer Inc., Quanta Computer Inc., Quanta Computer USA, Inc.. (kc, COURT STAFF) (Entered: 09/03/2003)

08/29/2003 545 DECLARATION in Support re [544] *by Rowena Young* filed by Q-Lity Computer Inc., Quanta Computer Inc., Quanta Computer USA, Inc.. (Related document(s)[544]) (kc, COURT STAFF) (Entered: 09/03/2003)

***

09/12/2003 549 MOTION to Amend/Correct *defendants' answers* filed by Q-Lity Computer Inc., Quanta Computer Inc., Quanta Computer USA, Inc.. Motion Hearing set for 10/17/2003 10:00 AM. (cp,) (Entered: 09/16/2003)

09/12/2003 550 Declaration of Peter J. Wied in Support of [549] filed by Q-Lity Computer Inc., Quanta Computer Inc., Quanta Computer USA, Inc.. (Related document(s)[549]) (cp,) (Entered: 09/16/2003)

***

09/24/2003 556 Memorandum in Opposition re [544] filed by LG Electonics Inc.. (cp,) (Entered: 09/29/2003)

09/24/2003 557 Declaration of Ralph A. Phillips in Support of [556] filed by LG Electonics Inc.. (Related document(s)[556]) (cp,) (Entered: 09/29/2003)

09/24/2003 558 Declaration of Dae-Sul Shim in Support of [556] filed by LG Electonics Inc.. (Related document(s)[556]) (cp,) (Entered: 09/29/2003)

***

09/26/2003 562 Memorandum in Opposition re [549] filed by LG Electonics Inc.. (cp,) (Entered: 10/02/2003)

09/26/2003 563 Declaration of Thomas E. Nelson in Support of [562] filed by LG Electonics Inc.. (Related document(s)[562]) (cp,) (Entered: 10/02/2003)

***

10/03/2003 565 Reply Memorandum to Motion re [549] filed by Q-Lity Computer Inc., Quanta Computer Inc., Quanta

Computer USA, Inc.. (cp,) (Entered: 10/06/2003)

***

10/08/2003 569 Reply Memorandum to Motion re [539] filed by Q-Lity Computer Inc., Quanta Computer Inc., Quanta Computer USA, Inc.. (cp, COURT STAFF) Modified on 10/9/2003 (cp, COURT STAFF).***REDACTED VERSION*** (Entered: 10/09/2003)

10/08/2003 570 Declaration of Lisa M. Byerly in Support of [569] ****REDACTED VERSION**** filed by Q-Lity Computer Inc., Quanta Computer Inc., Quanta Computer USA, Inc.. (Related document(s)[569]) (cp, COURT STAFF) (Entered: 10/09/2003)

***

10/08/2003 572 Reply Memorandum to Motion re [544] ****REDACTED VERSION**** filed by Q-Lity Computer Inc., Quanta Computer Inc., Quanta Computer USA, Inc.. (cp, COURT STAFF) (Entered: 10/09/2003)

10/08/2003 573 Declaration of Rowena Young in Support of [544] *(Supplemental)* filed by Q-Lity Computer Inc., Quanta Computer Inc., Quanta Computer

USA, Inc.. (Related document(s)[544]) (cp, COURT STAFF) (Entered: 10/09/2003)

10/08/2003 574 CORRECTED EXHIBIT W re [545] filed by Q-Lity Computer Inc., Quanta Computer Inc., Quanta Computer USA, Inc.. (Related document(s)[545]) (cp, COURT STAFF) Modified on 10/9/2003 (cp, COURT STAFF). (Entered: 10/09/2003)

10/08/2003 575 NOTICE *of lodging of transcript* by Q-Lity Computer Inc., Quanta Computer Inc., Quanta Computer USA, Inc.. (cp, COURT STAFF) (Entered: 10/09/2003)

***

10/08/2003 577 Joinder re [549] by Everex Systems. (cp, COURT STAFF) Modified on 10/14/2003 (cp, COURT STAFF). (Entered: 10/14/2003)

***

10/22/2003 580 ORDER by Judge Claudia Wilken denying [549] defendants' motion to amend answers and counterclaims (cp, COURT STAFF) (Entered: 10/24/2003)

***

11/03/2003 582 ORDER by Judge Special Master Edward A. Infante granting [453] Motion to Compel (cp, COURT STAFF) (Entered: 11/06/2003)

11/03/2003 583 ORDER by Judge Special Master Edward A. Infante concerning [463], [491] Motion to Compel (cp, COURT STAFF) (Entered: 11/06/2003)

11/10/2003 584 ORDER by Special Master GRANTING in part and DENYING in part Defendants' Motion to Compel discovery from LG Electronics [539] (kc, COURT STAFF) (Entered: 11/14/2003)

11/24/2003 585 ORDER by Judge Edward A. Infante GRANTING Motion to Compel [442] (kc, COURT STAFF) (Filed on 11/24/2003) (Entered: 11/25/2003)

***

12/01/2003 587 ORDER re defendants' motion to compel discovery from LG Electronics Inc; granting in part and denying in part motions to compel (documents submitted in camera review); denying motions for reasonable expenses and attorneys' fees pursuant to rule 37; expenses of the in camera review shall be divided equally among the parties. Signed by

Judge Special Master Edward A. Infante on 11/24/03. (cp, COURT STAFF) (Filed on 12/1/2003) (Entered: 12/08/2003)

***

12/16/2003 589 STIPULATION AND ORDER re: stipulated amendment to stipulated protective order re Serverworks Corporation. Signed by Special Master on 12/12/03. (cp, COURT STAFF) (Filed on 12/16/2003) (Entered: 12/16/2003)

12/29/2003 590 STIPULATION AND ORDER amending stipulated protective order re Intel Corporation. Signed by Special Master Edward A. Infante on 12/22/03. (kc, COURT STAFF) (Filed on 12/29/2003) (Entered: 12/30/2003)

***

01/23/2004 603 ORDER by Judge Edward A. Infante (Special Master) granting in part and denying in part [544] Motion to Compel production of documents and continued 30(B)(6) deposition testimony from LG Eletronics Inc, and denying attorney's fees incurred in making this motion (cp, COURT STAFF) (Filed on 1/23/2004) (Entered: 01/28/2004)

***

03/02/2004	605	ORDER denying ServeWorks' request for sanctions; granting LGE's request allowing Mr. Goodin to access ServeWorks documents maintained at the law offices of Fenwick & West. Signed by Judge Edward A. Infante, Special Master on 2/24/04. (cp, COURT STAFF) (Filed on 3/2/2004) (Entered: 03/05/2004)
03/02/2004	606	ORDER granting in part and denying in part defendant's motion to compel discovery; denying request to serve deposition questions in accordance with FRCP 31; denying request for further extension to exchange rebuttal damages reports.. Signed by Judge Edward A. Infante, Special Master on 2/27/04. (cp, COURT STAFF) (Filed on 3/2/2004) (Entered: 03/05/2004)

***

03/11/2004	608	Opposition to defendants' motions to compel production of documents and continued 30(b)(6) deposition and to compel discovery from LG Electronics Inc filed by LG Electonics Inc..******FILED UNDER SEAL****** (cp, COURT

STAFF) (Filed on 3/11/2004) (Entered: 03/18/2004)

03/11/2004 609 EXHIBITS 1-3,5,7,9,10,12 of Ralph A. Phillips in support of opposition of LG Electronics Inc to defendants' motions to compel production of documents and continued 30(b)(6) deposition and to compel discovery from LG Electronics filed by LG Electonics Inc..******FILED UNDER SEAL****** (cp, COURT STAFF) (Filed on 3/11/2004) (Entered: 03/18/2004)

03/15/2004 610 STIPULATION AND ORDER setting summary judgment briefing schedule and granting joint request to exceed page limits. Signed by Judge Claudia Wilken on 3/15/04. (cp, COURT STAFF) (Filed on 3/15/2004) (Entered: 03/18/2004)

***

03/17/2004 621 Reply in support of motion of defendants to compel discovery from LG Electronics Inc filed by Q-Lity Computer Inc., et al.******FILED UNDER SEAL****** (cp, COURT STAFF) (Filed on 3/17/2004) (Entered: 03/29/2004)

03/17/2004	622	EXHIBIT B re declaration of Lisa M. Byerly re motion to compel discovery from LG Electronics Inc filed by Q-Lity Computer Inc., et al.******FILED UNDER SEAL****** (cp, COURT STAFF) (Filed on 3/17/2004) (Entered: 03/29/2004)
03/17/2004	623	MOTION to Compel discovery from LG Electronics Inc filed by Q-Lity Computer Inc., et al.******FILED UNDER SEAL****** (cp, COURT STAFF) (Filed on 3/17/2004) (Entered: 03/29/2004)
03/17/2004	624	EXHIBIT I re declaration of Lisa M. Byerly re motion to compel discovery from LG Electronics Inc filed by Q-Lity Computer Inc., et al.******FILED UNDER SEAL****** (cp, COURT STAFF) (Filed on 3/17/2004) (Entered: 03/29/2004)
03/17/2004	625	EXHIBIT J re declaration of Lisa M. Byerly re motion to compel discovery from LG Electronics Inc filed by Q-Lity Computer Inc., et al.******FILED UNDER SEAL****** (cp, COURT STAFF) (Filed on 3/17/2004) (Entered: 03/29/2004)

03/17/2004	626	EXHIBIT P re declaration of Lisa M. Byerly re motion to compel discovery from LG Electronics Inc filed by Q-Lity Computer Inc.. (cp, COURT STAFF) (Filed on 3/17/2004) (Entered: 03/29/2004)
03/17/2004	628	MOTION for Protective Order filed by Q-Lity Computer Inc., Quanta Computer Inc..******FILED UNDER SEAL****** (cp, COURT STAFF) (Filed on 3/17/2004) (Entered: 04/02/2004)
03/17/2004	629	EXHIBITS K - Q re [536] declaration of Maxwell A. Fox in support of motion for protective order filed by Q-Lity Computer Inc., Quanta Computer Inc..******FILED UNDER SEAL****** (Related document(s)[536]) (cp, COURT STAFF) (Filed on 3/17/2004) (Entered: 04/02/2004)

***

03/19/2004	616	MOTION for Summary Judgment that defendants' intel-based products infringe the asserted method claims of the '645, '733' and '379 patents based on judicial estoppel filed by LG Electonics Inc.. Motion Hearing set for 5/21/2004 10:00 AM. (cp, COURT

STAFF) (Filed on 3/19/2004) (Entered: 03/24/2004)

***

03/26/2004 627 STIPULATION AND ORDER re Motherboard Schematics for Quanta Products. Signed by Judge Claudia Wilken on 3/26/04. (kc, COURT STAFF) (Filed on 3/26/2004) (Entered: 03/30/2004)

04/08/2004 630 Declaration of Maxwell A. Fox in support of Defendants' opposition to Plaintiff's motion for summary judgment and Defendants' cross-motion for summary judgment filed by ASUSTEK COMPUTER, INC., ET AL. (oh,) (Filed on 4/8/2004) (Entered: 04/12/2004)

04/08/2004 631 Opposition to motion for summary judgment [616] and Notice of CROSS-MOTION for Summary Judgment filed by Q-Lity Computer Inc., Quanta Computer Inc., Quanta Computer USA, Inc. Motion Hearing set for 5/21/2004 10:00 AM. ***REDACTED VERSION***(kc, COURT STAFF) (Filed on 4/8/2004) (Entered: 04/12/2004)

04/08/2004 632 Declaration of Robert W. Horst in Support of motion [631] and in

opposition to motion [616] filed by Q-Lity Computer Inc., Quanta Computer Inc., Quanta Computer USA, Inc. (Related document(s)[631]) (kc, COURT STAFF) (Filed on 4/8/2004) (Entered: 04/12/2004)

04/08/2004 633 Declaration of Dr. Gregg S. Foster in Support of motion [631] filed by Q-Lity Computer Inc., Quanta Computer Inc., Quanta Computer USA, Inc. (Related document(s)[631]) (kc, COURT STAFF) (Filed on 4/8/2004) (Entered: 04/12/2004)

04/08/2004 634 Declaration of Dr. Robert Printis in Support of motion [631] filed by Q-Lity Computer Inc., Quanta Computer Inc., Quanta Computer USA, Inc. (Related document(s)[631]) (kc, COURT STAFF) (Filed on 4/8/2004) (Entered: 04/12/2004)

04/08/2004 Proposed Order denying motion [616] by Q-Lity Computer Inc., Quanta Computer Inc., Quanta Computer USA, Inc.. (kc, COURT STAFF) (Filed on 4/8/2004) (Entered: 04/12/2004)

***

04/08/2004 638 MOTION to exclude reports of LGE's expert witnesses Dr. William

R. Huber and Mr. Richard Goodin filed by Q-Lity Computer Inc., Quanta Computer Inc., Quanta Computer USA, Inc. Motion Hearing set for 5/21/2004 10:00 AM. (kc, COURT STAFF) (Filed on 4/8/2004) (Entered: 04/12/2004)

04/08/2004 639 Declaration of Lisa M. Byerly in Support of motion [638] filed by Q-Lity Computer Inc., Quanta Computer Inc., Quanta Computer USA, Inc. (Related document(s)[638]) (kc, COURT STAFF) (Filed on 4/8/2004) (Entered: 04/12/2004)

***

04/12/2004 641 Notice of ERRATA re opposition and cross-motion for summary judgment [631] by Q-Lity Computer Inc., Quanta Computer Inc., Quanta Computer USA, Inc. (kc, COURT STAFF) (Filed on 4/12/2004) (Entered: 04/13/2004)

***

04/12/2004 651 Corrected Declaration of Maxwell A. Fox in Support of [644] opposition to plaintiff's motion for summary judgment and cross-motion for summary judgment filed by Quanta Computer Inc.. (Related

document(s)[644]) (cp, COURT STAFF) (Filed on 4/12/2004) (Entered: 04/30/2004)

04/13/2004 644 CORRECTED Opposition re [616] MOTION for Summary Judgment and notice of cross-motion for summary jugment filed by Q-Lity Computer Inc., Quanta Computer Inc., Quanta Computer USA, Inc. ***REDACTED VERSION*** (kcS,) (Filed on 4/13/2004) (Entered: 04/14/2004)

***

04/27/2004 649 CORRECTED OPPOSITION re: plaintiff's motion for summary judgment and CROSS-MOTION for Summary Judgment with memorandum in support filed by Quanta Computer Inc.. Motion Hearing set for 5/21/2004 10:00 AM. ******FILED UNDER SEAL******(cp, COURT STAFF) (Filed on 4/27/2004) (Entered: 04/30/2004)

04/27/2004 650 EXHIBITS A, D-G re [639] declaration of Lisa M. Byerly filed by Q-Lity Computer Inc.. (Related document(s)[639]) (cp, COURT STAFF) (Filed on 4/27/2004)

******FILED UNDER SEAL******. (Entered: 04/30/2004)

04/27/2004 652 EXHIBITS I (Volume I) re [651] declaration of Maxwell A. Fox filed by Quanta Computer Inc..******FILED UNDER SEAL****** (Related document(s)[651]) (cp, COURT STAFF) (Filed on 4/27/2004) (Entered: 04/30/2004)

04/27/2004 653 EXHIBITS (Volume II) re [651] declaration of Maxwell A. Fox filed by Quanta Computer Inc..******FILED UNDER SEAL****** (Related document(s)[651]) (cp, COURT STAFF) (Filed on 4/27/2004) (Entered: 04/30/2004)

04/27/2004 654 EXHIBITS (Volume III) re [651] declaration of Maxwell A. Fox filed by Quanta Computer Inc..******FILED UNDER SEAL****** (Related document(s)[651]) (cp, COURT STAFF) (Filed on 4/27/2004) (Entered: 04/30/2004)

04/27/2004 655 EXHIBITS (Volume IV) re [651] declaration of Maxwell A. Fox filed by Quanta Computer Inc..******FILED UNDER

SEAL****** (Related document(s)[651]) (cp, COURT STAFF) (Filed on 4/27/2004) (Entered: 04/30/2004)

04/27/2004 656 EXHIBITS (Volume V) re [651] declaration of Maxwell A. Fox filed by Quanta Computer Inc..*****FILED UNDER SEAL****** (Related document(s)[651]) (cp, COURT STAFF) (Filed on 4/27/2004) (Entered: 04/30/2004)

04/27/2004 657 EXHIBITS (Volume VI) re [651] declaration of Maxwell A. Fox filed by Quanta Computer Inc..******FILED UNDER SEAL****** (Related document(s)[651]) (cp, COURT STAFF) (Filed on 4/27/2004) (Entered: 04/30/2004)

04/28/2004 658 Reply in support re [616] MOTION for Summary Judgment based on judicial estoppel, and OPPOSITION re [649] Cross-Motion for Summary Judgment, filed by LG Electonics Inc..******REDACTED VERSION****** (cp, COURT STAFF) (Filed on 4/28/2004) (Entered: 05/03/2004)

04/28/2004	659	Declaration of Collin W. Park in Support of re [616] motion for summary judgment based on judicial estoppel, and OPPOSITION re [644] defedants' cross-motion for summary judgment filed by LG Electonics Inc.. (Related document(s)[616], [644]) (cp, COURT STAFF) (Filed on 4/28/2004) (Entered: 05/03/2004)
04/28/2004	660	Declaration of William R. Huber in Support of re [658] opposition to defendants' cross-motion for summary judgment filed by LG Electonics Inc.. (Related document(s)[658]) (cp, COURT STAFF) (Filed on 4/28/2004) (Entered: 05/03/2004)
04/28/2004	661	Declaration of William K. Hoffman in Support of re [658] opposition to defendants' cross-motion for summary judgment filed by LG Electonics Inc..******REDACTED VERSION****** (Related document(s)[658]) (cp, COURT STAFF) (Filed on 4/28/2004) (Entered: 05/03/2004)
04/28/2004	662	Declaration of Jerry A. Klein in Support of re [658] opposition to defendants' cross-motion for summary judgment filed by LG Electonics Inc..******REDACTED

VERSION****** (Related document(s)[658]) (cp, COURT STAFF) (Filed on 4/28/2004) (Entered: 05/03/2004)

04/28/2004 663 MOTION to Seal Document (unredacted opposition, Klein and Hoffman declarations, exhibits to the Park and Hoffman declarations) filed by LG Electonics Inc.. (cp, COURT STAFF) (Filed on 4/28/2004) (Entered: 05/03/2004)

04/28/2004 664 Declaration of David M. Morris in Support of [663] filed by LG Electonics Inc.. (Related document(s)[663]) (cp, COURT STAFF) (Filed on 4/28/2004) (Entered: 05/03/2004)

***

04/28/2004 675 Declaration of Jerry A. Klein in Support of [674]opposition filed by LG Electonics Inc..******FILED UNDER SEAL****** (Related document(s)[674]) (cp, COURT STAFF) (Filed on 4/28/2004) (Entered: 05/05/2004)

04/28/2004 676 Declaration of William K. Hoffman in Support of [674]opposition filed by LG Electonics Inc..******FILED UNDER SEAL****** (Related

document(s)[674]) (cp, COURT STAFF) (Filed on 4/28/2004) (Entered: 05/05/2004)

04/30/2004 666 Memorandum in Opposition re [638] MOTION to exclude reports of LGE's expert witnesses Dr. William R. Huber and Mr. Richard Goodin filed by LG Electonics Inc.. (cp, COURT STAFF) (Filed on 4/30/2004) (Entered: 05/05/2004)

04/30/2004 667 Declaration of Thomas E. Nelson in Support of [666] filed by LG Electonics Inc.. (Related document(s)[666]) (cp, COURT STAFF) (Filed on 4/30/2004) (Entered: 05/05/2004)

***

04/30/2004 674 Reply in support re [616] MOTION for Summary Judgment based on judicial estoppel, and OPPOSITION re [649] Cross-MOTION for Summary Judgment filed by LG Electonics Inc..******FILED UNDER SEAL****** (cp, COURT STAFF) (Filed on 4/30/2004) (Entered: 05/05/2004)

04/30/2004 677 EXHIBITS 3,4,7-11,13-16,24,25,28,30,32,33 re [659] declaration of Collin w. Park filed by

LG Electonics Inc..******FILED UNDER SEAL****** (Related document(s)[659]) (cp, COURT STAFF) (Filed on 4/30/2004) (Entered: 05/05/2004)

***

05/04/2004 678 EXHIBITS 2,11,13-15 re [667] declaration of Thomas E. Nelson filed by LG Electonics Inc..******FILED UNDER SEAL****** (Related document(s)[667]) (cp, COURT STAFF) (Filed on 5/4/2004) (Entered: 05/05/2004)

05/04/2004 679 Declaration of Professor John D. Kubiatowicz, Ph.D. filed by Quanta Computer Inc..******FILED UNDER SEAL****** (cp, COURT STAFF) (Filed on 5/4/2004) (Entered: 05/05/2004)

05/07/2004 680 Joinder re [649] opposition to plaintiff's motion for summary judgment and cross-motion for summary judgment by Everex Systems Inc. (cp, COURT STAFF) (Filed on 5/7/2004) (Entered: 05/11/2004)

***

05/07/2004 683 Reply to Opposition re [638] motion to exclude reports of LGE's expert

witnesses Dr. William R. Huber and Mr. Richard Goodin filed by Quanta Computer Inc.. ******REDACTED****** (cp, COURT STAFF) (Filed on 5/7/2004) (Entered: 05/11/2004)

05/07/2004 684 Declaration of Rowena Young in Support of [683] filed by Quanta Computer Inc.******PUBLIC VERSION******. (Related document(s)[683]) (cp, COURT STAFF) (Filed on 5/7/2004) (Entered: 05/11/2004)

***

05/07/2004 689 Reply in support re [649] Cross-motion for summary judgment filed by Quanta Computer Inc.. (cp, COURT STAFF) (Filed on 5/7/2004) (Entered: 05/11/2004)

05/07/2004 690 Declaration of Lisa M. Byerly in Support of [689] filed by Quanta Computer Inc.. (Related document(s)[689]) (cp, COURT STAFF) (Filed on 5/7/2004) (Entered: 05/11/2004)

05/07/2004 691 Supplemental Declaration of Robert W. Horst in Support of [649] cross-motion for summary judgment filed by Quanta Computer

Inc..******REDACTED VERSION****** (Related document(s)[649]) (cp, COURT STAFF) (Filed on 5/7/2004) (Entered: 05/11/2004)

05/07/2004 692 Supplemental Declaration of Dr. Robert Printis in Support of [649] cross-motion for summary judgment filed by Quanta Computer Inc.. (Related document(s)[649]) (cp, COURT STAFF) (Filed on 5/7/2004) (Entered: 05/11/2004)

05/07/2004 693 OBJECTIONS to evidence by Quanta Computer Inc..******REDACTED****** (cp, COURT STAFF) (Filed on 5/7/2004) (Entered: 05/11/2004)

***

05/11/2004 698 Reply in support re [649] defendants' cross-motion for summary judgment filed by Quanta Computer Inc..******FILED UNDER SEAL****** (cp, COURT STAFF) (Filed on 5/11/2004) (Entered: 05/12/2004)

05/11/2004 699 EXHIBITS A,B re [691] declaration of Robert W. Horst filed by Quanta Computer Inc..******FILED UNDER SEAL****** (Related

document(s)[691]) (cp, COURT STAFF) (Filed on 5/11/2004) (Entered: 05/12/2004)

05/11/2004 700 MOTION to Strike [693] Objection to evidence filed by LG Electonics Inc.. (cp, COURT STAFF) (Filed on 5/11/2004) (Entered: 05/12/2004)

05/11/2004 701 EXHIBITS A,B,E,F,H-M,R,S re [690] declaration of Lisa M. Byerly filed by Quanta Computer Inc..******FILED UNDER SEAL****** (Related document(s)[690]) (cp, COURT STAFF) (Filed on 5/11/2004) (Entered: 05/13/2004)

***

05/11/2004 704 Reply to Opposition re [638] motion to exclude reports of LGE's expert witnesses Dr. William R. Huber and Mr. Richard Goodin filed by Quanta Computer Inc..******FILED UNDER SEAL****** (cp, COURT STAFF) (Filed on 5/11/2004) (Entered: 05/13/2004)

05/11/2004 705 OBJECTIONS to evidence by Quanta Computer Inc..******FILED UNDER SEAL****** (cp, COURT STAFF) (Filed on 5/11/2004) (Entered: 05/13/2004)

05/11/2004	706	EXHIBITS B,E,F re [684]declaration of Rowena Young filed by Quanta Computer Inc..******FILED UNDER SEAL****** (Related document(s)[684]) (cp, COURT STAFF) (Filed on 5/11/2004) (Entered: 05/13/2004)

***

05/14/2004	711	Memorandum in Opposition re [700] MOTION to Strike [693] Objection filed by Quanta Computer Inc.. (cp, COURT STAFF) (Filed on 5/14/2004) (Entered: 05/17/2004)
05/14/2004	712	Declaration of Lisa M. Byerly in Support of [711] filed by Quanta Computer Inc.. (Related document(s)[711]) (cp, COURT STAFF) (Filed on 5/14/2004) (Entered: 05/17/2004)

***

05/14/2004	714	MOTION to Stay litigation and vacate trial dates filed by Quanta Computer Inc.. Motion Hearing set for 6/18/2004 10:00 AM. (cp, COURT STAFF) (Filed on 5/14/2004) (Entered: 05/17/2004)
05/14/2004	715	Declaration of Peter J. Wied in Support of [714] filed by Quanta

Computer Inc.. (Related document(s)[714]) (cp, COURT STAFF) (Filed on 5/14/2004) (Entered: 05/17/2004)

***

05/18/2004 717 Joinder re [714] motion to stay based on reexamination of plaintiff's 4,918,645 patent by Everex Systems. (cp, COURT STAFF) (Filed on 5/18/2004) (Entered: 05/19/2004)

05/28/2004 718 Memorandum in Opposition re [714] MOTION to Stay and vacate trial dates filed by LG Electonics Inc.. (cp, COURT STAFF) (Filed on 5/28/2004) (Entered: 06/02/2004)

05/28/2004 719 Declaration of Thomas E. Nelson in Support of [718] filed by LG Electonics Inc.. (Related document(s)[718]) (cp, COURT STAFF) (Filed on 5/28/2004) (Entered: 06/02/2004)

06/04/2004 720 Reply Brief in support of [714] MOTION to Stay filed by Q-Lity Computer Inc., Quanta Computer Inc., Quanta Computer USA, Inc. (kc, COURT STAFF) (Filed on 6/4/2004) (Entered: 06/07/2004)

***

06/24/2004	723	ORDER by Judge Claudia Wilken granting in part and denying in part [714] Motion to Stay (cp, COURT STAFF) (Filed on 6/24/2004) (Entered: 06/25/2004)
07/08/2004	724	MOTION for Reconsideration re [580] Order on Motion to Amend, and [404] Order on Motion to Amend filed by Q-Lity Computer Inc.. (cp, COURT STAFF) (Filed on 7/8/2004) (Entered: 07/09/2004)
07/08/2004	725	Declaration of Peter J. Wied in Support of [724] filed by Q-Lity Computer Inc.. (Related document(s)[724]) (cp, COURT STAFF) (Filed on 7/8/2004) (Entered: 07/09/2004)

***

07/22/2004	727	Memorandum in Opposition re [724] MOTION for Reconsideration filed by LG Electonics Inc. (kc, COURT STAFF) (Filed on 7/22/2004) (Entered: 07/23/2004)
07/22/2004		Received Proposed Order re Motion for Reconsideration [724] by LG Electonics Inc. (kc, COURT STAFF) (Filed on 7/22/2004) (Entered: 07/23/2004)

***

07/22/2004	728	Declaration of Thomas E. Nelson in Support of Opposition [727] filed byLG Electronics, Inc. (Related document(s)[727]) (kc, COURT STAFF) (Filed on 7/22/2004) (Entered: 07/23/2004)

***

07/23/2004	732	JOINT MOTION for Sanctions against plaintiff for withholding relevant prior art and to reopen limited discovery and reschedule trial filed by Quanta Computer Inc.. Motion Hearing set for 8/27/2004 10:00 AM. ******REDACTED******(cp, COURT STAFF) (Filed on 7/23/2004) (Entered: 07/30/2004)
07/23/2004	733	Declaration of Maxwell A. Fox in Support of [732] filed by Quanta Computer Inc.. (Related document(s)[732]) (cp, COURT STAFF) (Filed on 7/23/2004) (Entered: 07/30/2004)

***

07/29/2004	735	Reply brief in support re [724] motion for reconsideration filed by Quanta Computer Inc.. (cp, COURT STAFF) (Filed on 7/29/2004) (Entered: 07/30/2004)

***

07/30/2004 737 ORDER by Judge Claudia Wilken granting [730] Motion to Seal (cp, COURT STAFF) (Filed on 7/30/2004) (Entered: 08/04/2004)

07/30/2004 738 Joint MOTION for Sanctions againts plaintiff for withholding relevant prior art and to reopen limited discovery and reschedule trial filed by Quanta Computer Inc.. Motion Hearing set for 8/27/2004 10:00 AM. (cp, COURT STAFF) (Filed on 7/30/2004)******FILED UNDER SEAL****** (Entered: 08/04/2004)

07/30/2004 739 EXHIBITS H,J,L,M,Q,S,T,W,X re [733] filed by Quanta Computer Inc.. (Related document(s)[733]) (cp, COURT STAFF) (Filed on 7/30/2004)******FILED UNDER SEAL****** (Entered: 08/04/2004)

08/13/2004 740 Memorandum in Opposition re [732], [738] Joint MOTION for Sanctions againts plaintiff for withholding relevant prior art and to reopen limited discovery and reschedule trial filed by LG Electonics Inc.. (cp, COURT STAFF) (Filed on 8/13/2004) (Entered: 08/18/2004)

08/13/2004	741	Declaration of Thomas E. Nelson in Support of [740] filed by LG Electonics Inc.. (Related document(s)[740]) (cp, COURT STAFF) (Filed on 8/13/2004) (Entered: 08/18/2004)
08/13/2004	742	Declaration of Jeong-Joong Kim in Support of [740] filed by LG Electonics Inc.. (Related document(s)[740]) (cp, COURT STAFF) (Filed on 8/13/2004) (Entered: 08/18/2004)
08/20/2004	743	Reply to Opposition re Motion for Sanctions [732] filed by Q-Lity Computer Inc., Quanta Computer Inc., Quanta Computer USA, Inc. (kc, COURT STAFF) (Filed on 8/20/2004) (Entered: 08/23/2004)
08/20/2004	744	Declaration of James M. Smith in Support of Reply [743] filed by Q-Lity Computer Inc., Quanta Computer Inc., Quanta Computer USA, Inc. (Related document(s)[743]) (kc, COURT STAFF) (Filed on 8/20/2004) (Entered: 08/23/2004)

***

09/08/2004	748	ORDER by Judge Claudia Wilken referring motion for sanctions [732], [738] to Special Master; granting

motion to reopen limited discovery, and reschedule the trial (cp, COURT STAFF) (Filed on 9/8/2004) (Entered: 09/10/2004)

09/09/2004 749 Minute Entry: Motion Hearing and pretrial conference held on 9/3/2004 before Judge Claudia Wilken (Date Filed: 9/9/2004); motions under submission; granting motion to close courtroom during portions of the hearing; Jury Trial continued to 11/8/2004 08:30 AM re invalidity; Pretrial Conference set for 10/29/2004 01:30 PM re: validity issue only; (Court Reporter Stephanie Smithson.) (cp, COURT STAFF) (Date Filed: 9/9/2004) (Entered: 09/10/2004)

09/15/2004 750 AMENDED ANSWER and COUNTERCLAIM; demand for jury trial by Quanta Computer USA, Inc.. (cp, COURT STAFF) (Filed on 9/15/2004) (Entered: 09/16/2004)

09/15/2004 751 AMENDED ANSWER AND COUNTERCLAIM; demand for jury trial by Quanta Computer Inc.. (cp, COURT STAFF) (Filed on 9/15/2004) (Entered: 09/16/2004)

09/15/2004 752 AMENDED ORDER regarding filing of documents. Signed by Judge

Claudia Wilken on 9/15/04. (cp, COURT STAFF) (Filed on 9/15/2004) (Entered: 09/21/2004)

09/17/2004 753 TRANSCRIPT of Proceedings held on 9/3/04 before Judge Claudia Wilken. Court Reporter: Stephanie Smithson.. (cp, COURT STAFF) (Filed on 9/17/2004) (Entered: 09/21/2004)

09/17/2004 754 TRANSCRIPT of Proceedings held on 9/3/04 before Judge Claudia Wilken. Court Reporter: Stephanie Smithson.. (cp, COURT STAFF) (Filed on 9/17/2004)******FILED UNDER SEAL, PAGES 37 & 38 ONLY****** (Entered: 09/21/2004)

09/24/2004 755 Opposition to defendants' request for international judicial assistance filed by LG Electonics Inc.. (cp, COURT STAFF) (Filed on 9/24/2004) (Entered: 09/28/2004)

09/24/2004 756 Declaration of David M. Morris in Support of [755] filed by LG Electonics Inc.. (Related document(s)[755]) (cp, COURT STAFF) (Filed on 9/24/2004) (Entered: 09/28/2004)

***

10/01/2004 760 ORDER regarding request for international judicial assistance and requiring defendants to pay costs. Signed by Judge Claudia Wilken on 10/01/04. (cp, COURT STAFF) (Filed on 10/1/2004) (Entered: 10/05/2004)

***

10/04/2004 764 ORDER denying defendants' motion to continue trial. Signed by Judge Claudia Wilken on 10/04/04. (cp, COURT STAFF) (Filed on 10/4/2004) (Entered: 10/06/2004)

***

10/08/2004 766 MOTION to Continue invalidity trial filed by defendants Bizcom Electronics Inc, Compal Electronics Inc, and Sceptre Technologies Inc.. (cp, COURT STAFF) (Filed on 10/8/2004) (Entered: 10/13/2004)

10/08/2004 767 Declaration of William L. Anthony, Jr. in Support of [765], [766] filed by defendants Bizcom Electronics Inc, Compal Electronics Inc, and Sceptre Technologies Inc. (Related document(s)[765], [766]) (cp, COURT STAFF) (Filed on 10/8/2004) (Entered: 10/13/2004)

***

10/13/2004	769	Memorandum in Opposition re [766] MOTION to Continue filed by LG Electonics Inc.. (cp, COURT STAFF) (Filed on 10/13/2004) (Entered: 10/15/2004)
10/13/2004		Received Order denying re [766] MOTION to Continue invalidity trial by LG Electonics Inc.. (cp, COURT STAFF) (Filed on 10/13/2004) (Entered: 10/15/2004)

***

10/15/2004	772	MOTION for Summary Judgment of invalidity of the '645 patent filed by defendants Bizcom, et al. (cp, COURT STAFF) (Filed on 10/15/2004) (Entered: 10/19/2004)
10/15/2004	773	Declaration of John D. Kubiatowicz, Ph.D. filed bydefendants Bizcom, et al (cp, COURT STAFF) (Filed on 10/15/2004) (Entered: 10/19/2004)
10/15/2004		Received Proposed Order granting re [772] filed by Bizcom Electronics, Inc., et al. (cp, COURT STAFF) (Filed on 10/15/2004) (Entered: 10/19/2004)
10/15/2004	774	Declaration of Peter J. Wied in Support of [772] filed by defendants Bizcom, et al. (Related document(s)[772]) (cp, COURT

STAFF) (Filed on 10/15/2004) Modified on 10/20/2004 (cp, COURT STAFF). (Entered: 10/19/2004)

***

10/19/2004 776 ORDER granting [766] MOTION to Continue invalidity trial; vacating 11/8/04 trial date, and the October pretrial conference; MOTION for Summary Judgment [772] is continued to 12/3/2004 10:00 AM.;. Signed by Judge Claudia Wilken on 10/19/04. (cp, COURT STAFF) (Filed on 10/19/2004) (Entered: 10/20/2004)

10/19/2004 777 TRIAL BRIEF by LG Electonics Inc.. (cp, COURT STAFF) (Filed on 10/19/2004) (Entered: 10/25/2004)

10/19/2004 778 NOTICE of lodging invalidity trial exhibits by LG Electonics Inc. (cp, COURT STAFF) (Filed on 10/19/2004) (Entered: 10/25/2004)

10/19/2004 779 OBJECTIONS to defendants' exhibit list by LG Electonics Inc.. (cp, COURT STAFF) (Filed on 10/19/2004) (Entered: 10/25/2004)

10/19/2004 780 Proposed Verdict Form by LG Electonics Inc.. (cp, COURT STAFF) (Filed on 10/19/2004) (Entered: 10/25/2004)

10/19/2004 781 Deposition designations, Objections and counter-designations to defendants' deposition designations, and objections to defendants' counter-designations for invalidity trial by LG Electonics Inc.. (cp, COURT STAFF) (Filed on 10/19/2004) (Entered: 10/25/2004)

10/19/2004 782 Witness List for invalidity trial by LG Electonics Inc.. (cp, COURT STAFF) (Filed on 10/19/2004) (Entered: 10/25/2004)

10/19/2004 783 Proposed Additional Voir Dire and Objections to defendants' proposed additional voir dire by LG Electonics Inc.. (cp, COURT STAFF) (Filed on 10/19/2004) (Entered: 10/25/2004)

***

10/19/2004 785 TRIAL BRIEF regarding exclusion of license agreements identified as LG Electronics' proposed exhibit nos. 32-38 by defendants Bizcom Electronics, Inc., et al. (cp, COURT STAFF) (Filed on 10/19/2004) (Entered: 10/25/2004)

10/19/2004 786 Designation of excerpts from deposition testimony and answers to interrogatories pursuant to order for pretrial preparation by defendants

		Bizcom Electronics, Inc., et al (cp, COURT STAFF) (Filed on 10/19/2004) (Entered: 10/25/2004)
10/19/2004	787	Witness List for trial by defendants Bizcom Electronics, Inc., et al. . (cp, COURT STAFF) (Filed on 10/19/2004) (Entered: 10/25/2004)
10/19/2004	788	OBJECTIONS to LG Electronics' trial exhibits by defendants Bizcom Electronics, Inc., et al.(cp, COURT STAFF) (Filed on 10/19/2004) (Entered: 10/25/2004)
10/19/2004	789	OBJECTIONS to LG Electronics' deposition counter-designations by defendants Bizcom Electronics, Inc., et al. . (cp, COURT STAFF) (Filed on 10/19/2004) (Entered: 10/25/2004)
10/19/2004	790	Suggested Additional Voir Dire Questions filed by defendants Bizcom, et al. (cp, COURT STAFF) (Filed on 10/19/2004) (Entered: 10/25/2004)
10/19/2004	791	Proposed Verdict Form for issues related to the invalidity of LG Electronics' asserted patents by defendants Bizcom Electronics, Inc., et al. (cp, COURT STAFF) (Filed on 10/19/2004) (Entered: 10/25/2004)

10/19/2004	792	Joint and Disputed Jury Instructions filed by defendants, plaintiff (cp, COURT STAFF) (Filed on 10/19/2004) (Entered: 10/25/2004)

***

10/19/2004	794	TRIAL BRIEF regarding claim construction for the term "partitioned memory" in the 509 patent by defendants Bizcom, et al. . (cp, COURT STAFF) (Filed on 10/19/2004) (Entered: 10/26/2004)
10/19/2004	795	Declaration of Matthew J. Hult in Support of [794] filed bydefendants Bizcom Electronics, Inc., et al.(Related document(s)[794]) (cp, COURT STAFF) (Filed on 10/19/2004) (Entered: 10/26/2004)
10/19/2004	796	OBJECTIONS to LG Electronics' deposition testimony designations by defendants Bizcom Electronics, Inc.et al. . (cp, COURT STAFF) (Filed on 10/19/2004) (Entered: 10/26/2004)

***

10/19/2004	800	MOTION in Limine #s 1-3 filed by defendants Bizcom Electronics, Inc., et al. . (cp, COURT STAFF) (Filed on 10/19/2004) (Entered: 10/26/2004)

10/19/2004 801 Declaration of Matthew J. Hult in Support of [800] filed by defendants Bizcom Electronics, Inc., et al. (Related document(s)[800]) (cp, COURT STAFF) (Filed on 10/19/2004) (Entered: 10/26/2004)

10/20/2004 802 JOINT PRETRIAL CONFERENCE STATEMENT by defendants Bizcom Electronics, Inc. et al, and plaintiff LG Electronics, Inc. (cp, COURT STAFF) (Filed on 10/20/2004) (Entered: 10/27/2004)

***

10/20/2004 806 NOTICE by defendants Quanta Computer Inc., Bizcom Electronics, Inc., et al of lodging invalidity trial exhibits (cp, COURT STAFF) (Filed on 10/20/2004) (Entered: 10/27/2004)

***

10/21/2004 809 NOTICE by Quanta Computer Inc., Bizcom Electronics, Inc., et al of errata re: defendants' witness list for trial (cp, COURT STAFF) (Filed on 10/21/2004) (Entered: 10/27/2004)

***

10/22/2004 811 JOINT Exhibit List for the invalidity trial by Quanta Computer Inc.., et al, plaintiff LG Electronics, Inc.. .. (cp,

COURT STAFF) (Filed on 10/22/2004) (Entered: 10/27/2004)

***

10/22/2004 813 EXHIBIT 6 re [801] declaration of Matthew J. Hult in support of motion in limine filed by Quanta Computer Inc., Bizcom Electronics, Inc., et al. (Related document(s)[801]) (cp, COURT STAFF) (Filed on 10/22/2004)******FILED UNDER SEAL****** (Entered: 10/27/2004)

***

10/25/2004 816 Opposition to defendants' trial brief regarding exclusion of license agreements identified as LG Electronics' exhibit #s 32-38 filed by LG Electonics Inc.. (cp, COURT STAFF) (Filed on 10/25/2004)******REDACTED VERSION****** (Entered: 10/29/2004)

10/25/2004 817 Declaration of Collin W. Park in Support of [816] filed by LG Electonics Inc.. (Related document(s)[816]) (cp, COURT STAFF) (Filed on 10/25/2004) (Entered: 10/29/2004)

10/25/2004 818 Memorandum in Opposition re [800] MOTION in Limine filed by LG

Electonics Inc.. (cp, COURT STAFF) (Filed on 10/25/2004) (Entered: 10/29/2004)

10/25/2004 819 Declaration of Ralph A. Phillips in Support of [818] opposition to motion in limine and opposition to defendants' trial brief regarding the term "partitioned memory" in the '509 patent filed by LG Electonics Inc.. (Related document(s)[818]) (cp, COURT STAFF) (Filed on 10/25/2004) (Entered: 11/01/2004)

10/25/2004 820 RESPONSE to re [794] TRIAL BRIEF regarding claim construction for the term "partitioned memory" in the 509 patent by LG Electonics Inc.. (cp, COURT STAFF) (Filed on 10/25/2004) (Entered: 11/01/2004)

***

10/25/2004 822 Declaration of Matthew J. Hult in support of defendants' response to LG Electronics' "trial brief" filed by Quanta Computer Inc., et al. (cp, COURT STAFF) (Filed on 10/25/2004) (Entered: 11/01/2004)

10/26/2004 823 Memorandum in Opposition to LG Electronics' trial brief filed by Quanta Computer Inc., et al. (cp,

COURT STAFF) (Filed on 10/26/2004) (Entered: 11/01/2004)

***

10/26/2004 825 ERRATA re [823] Opposition to LG Electronics' trial brief by Quanta Computer Inc.. (cp, COURT STAFF) (Filed on 10/26/2004) (Entered: 11/01/2004)

10/26/2004 826 CORRECTED OPPOSITION to LG Electronics' trial brief filed by Quanta Computer Inc., et al. (cp, COURT STAFF) (Filed on 10/26/2004) (Entered: 11/01/2004)

***

10/28/2004 830 Memorandum in Opposition re [772] MOTION for Summary Judgment of invalidity of the '645 patent filed by LG Electonics Inc.. (cp, COURT STAFF) (Filed on 10/28/2004) (Entered: 11/01/2004)

10/28/2004 831 Declaration of William K. Hoffman in Support of [830] Opposition to motion for Summary Judgment of invalidity of the '645 patent filed by LG Electonics Inc.. (Related document(s)[830]) (cp, COURT STAFF) (Filed on 10/28/2004) (Entered: 11/04/2004)

10/28/2004	832	Declaration of Thomas E. Nelson in Support of [830] opposition motion for Summary Judgment of invalidity of the '645 patent filed by LG Electonics Inc.. (Related document(s)[830]) (cp, COURT STAFF) (Filed on 10/28/2004) (Entered: 11/04/2004)
10/28/2004	833	Declaration of Thomas G. Wiseman in Support of [830] Opposition to motion for Summary Judgment of invalidity of the '645 patent filed by LG Electonics Inc.. (Related document(s)[830]) (cp, COURT STAFF) (Filed on 10/28/2004) (Entered: 11/04/2004)

***

11/01/2004	835	ERRATA re [833] Declaration of Thomas G. Wiseman in Support of opposition to motion for Summary Judgment of invalidity of the '645 patent by LG Electonics Inc.. (cp, COURT STAFF) (Filed on 11/1/2004) (Entered: 11/05/2004)
11/01/2004	836	Corrected Declaration of Thomas G. Wiseman in Support of [830] Opposition to defendants' motion for summary judgment of invalidity of the '645 patent filed by LG Electonics Inc.. (Related document(s)[830]) (cp, COURT STAFF) (Filed on 11/1/2004)

Modified on 11/5/2004 (cp, COURT STAFF). (Entered: 11/05/2004)

***

11/02/2004 838 Memorandum in Opposition to defendants' trial brief regarding exclusion of license agreements identified as LG Electronics' exhibit nos. 32-38 filed by LG Electonics Inc.. (cp, COURT STAFF) (Filed on 11/2/2004) (Entered: 11/05/2004)

11/02/2004 839 EXHIBIT B re [817] Declaration of Collin W. Park filed by LG Electonics Inc.. (Related document(s)[817]) (cp, COURT STAFF) (Filed on 11/2/2004)******FILED UNDER SEAL****** (Entered: 11/05/2004)

11/02/2004 840 EXHIBIT 1 re [819] Declaration of Ralph A. Phillips filed by LG Electonics Inc.. (Related document(s)[819]) (cp, COURT STAFF) (Filed on 11/2/2004)******FILED UNDER SEAL****** (Entered: 11/05/2004)

11/04/2004 841 OBJECTIONS to Declaration [833] by Q-Lity Computer Inc., Quanta Computer Inc., Quanta Computer USA, Inc. (kc, COURT STAFF) (Filed on 11/4/2004) (Entered: 11/05/2004)

11/04/2004	842	Declaration of Lisa M. Byerly in Support of Objections [841] filed by Q-Lity Computer Inc., Quanta Computer Inc., Quanta Computer USA, Inc. (Related document(s)[841]) (kc, COURT STAFF) (Filed on 11/4/2004) (Entered: 11/05/2004)
11/04/2004	843	Reply Brief in support of [772] MOTION for Summary Judgment filed by Q-Lity Computer Inc., Quanta Computer Inc., Quanta Computer USA, Inc. (kc, COURT STAFF) (Filed on 11/4/2004) (Entered: 11/05/2004)
11/04/2004	844	Second Declaration of Peter J. Wied in Support of [772] filed by Q-Lity Computer Inc., Quanta Computer Inc., Quanta Computer USA, Inc. (Related document(s)[772]) (kc, COURT STAFF) (Filed on 11/4/2004) (Entered: 11/05/2004)
		***
11/30/2004	846	ORDER by Judge Claudia Wilken DENYING [616] Motion for Summary Judgment, DENYING Motion to exclude the Huber Expert Report and GRANTING motion to exclude the Goodin Supplmental Report [638], DENYING as moot [724] Motion for Reconsideration,

GRANTING Defendants' motion for summary adjudication of non-infringement of the '733, '645, and '379 Patents, GRANTING Defendants' motion for summary adjudication that the infringement claims under the '509 patent are barred, DENYING as moot Defendants' motion for summary adjudication of non-infringement of the '509 patent; GRANTING Defendants' unopposed motion for summary adjudication that Defendants' sales to HP and its subsidiaries are licensed or protected by license under the '733, '379, and '645 patents [649]; GRANTING defendants' motion to amend. (kc, COURT STAFF) (Filed on 11/30/2004) Modified on 12/6/2004 (cp, COURT STAFF). (Entered: 12/03/2004)

11/30/2004 847 MOTION for Leave to File supplemental declaration of Professor John D. Kubiatowicz, Ph.D. filed by Quanta Computer USA, Inc., Q-Lity Computer Inc., Quanta Computer Inc. (kc, COURT STAFF) (Filed on 11/30/2004) (Entered: 12/03/2004)

11/30/2004 848 Declaration of Peter J. Wied in Support of [847] MOTION for Leave to File supplemental declaration filed

byQuanta Computer USA, Inc., Q-Lity Computer Inc., Quanta Computer Inc. (Related document(s)[847]) (kc, COURT STAFF) (Filed on 11/30/2004) (Entered: 12/03/2004)

***

01/06/2005 850 STIPULATION to enter final judgment by LG Electonics Inc., Q-Lity Computer Inc., et al. (cp, COURT STAFF) (Filed on 1/6/2005) (Entered: 01/10/2005)

***

01/19/2005 852 ORDER to enter final judgment; judgment on plaintiff's claims of infringement is entered in favor of defendants; all remaining counterclaims of defendants are dismissed without prejudice as moot. Signed by Judge Claudia Wilken on 1/19/05. (cp, COURT STAFF) (Filed on 1/19/2005) (Entered: 01/21/2005)

01/31/2005 853 CLERK'S JUDGMENT: plaintiff's claims of infringement is entered in favor of defendants; all remaining counterclaims of defendants are dismissed without prejudice as moot (cp, COURT STAFF) (Filed on 1/31/2005) (Entered: 01/31/2005)

***

02/22/2005 857 STIPULATION AND ORDER amending stipulated protective order regarding use of confidential materials in Netherlands action. Signed by Judge Claudia Wilken on 2/22/05. (kc, COURT STAFF) (Filed on 2/22/2005) (Entered: 02/23/2005)

***

03/01/2005 859 NOTICE OF APPEAL (FEDERAL CIRCUIT) as to [208] Order, [846] Order on Motion for Summary Judgment, [209] Order on Motion for Summary Judgment, [359] Order, [852] Order, [853] Clerk's Judgment by LG Electonics Inc.. Filing fee $ 255, receipt number 4410778. (cp, COURT STAFF) (Filed on 3/1/2005) (Entered: 03/02/2005)

***

03/02/2005 Transmission of Notice of Appeal and Docket Sheet to US Court of Appeals (cp, COURT STAFF) (Filed on 3/2/2005) (Entered: 03/02/2005)

***

03/11/2005 869 TRANSCRIPT REQUEST by LG Electonics Inc. for proceedings held (see document per plaintiff)

		transcript already on file, except for hearing held on 12/26/01, docket #64 in C-01-2187-CW re [859] Notice of Appeal, Transcript due by 3/25/2005. (cp, COURT STAFF) (Filed on 3/11/2005) (Entered: 03/16/2005)
		***
03/14/2005		USCA Case Number 05-1264 for [859] Notice of Appeal, filed by LG Electonics Inc. (kc, COURT STAFF) (Filed on 3/14/2005) (Entered: 03/15/2005)
03/14/2005	863	ORDER of USCA as to [859] Notice of Appeal, filed by LG Electonics Inc.: that the appeals in case nos. C-01-1375, C-01-1552, C-01-1594, and C-01-2187 are consolidated (kc, COURT STAFF) (Filed on 3/14/2005) (Entered: 03/15/2005)
		***
03/15/2005	871	NOTICE OF CROSS APPEAL (Federal Circuit) as to [208] Order, [209] Order on Motion for Summary Judgment, [359] Order by Quanta Computer USA, Inc., Q-Lity Computer Inc., Quanta Computer Inc. Filing fee $ 255, receipt number 4410858. Appeal Record due by 4/14/2005. (cp, COURT STAFF)

(Filed on 3/15/2005) (Entered: 03/16/2005)

03/16/2005 Transmission of Notice of Cross-Appeal and Docket Sheet to US Court of Appeals for the Federal Circuit re [871] Notice of Cross Appeal, (cp, COURT STAFF) (Filed on 3/16/2005) (Entered: 03/16/2005)

***

03/29/2005 872 TRANSCRIPT DESIGNATION for proceedings held on 9/3/04 before Judge Claudia Wilken filed by Sceptre Technologies, Inc., Bizcom Electronics, Inc., Compal Electronics, Inc., (cp, COURT STAFF) (Filed on 3/29/2005) (Entered: 03/31/2005)

03/29/2005 873 TRANSCRIPT DESIGNATION for proceedings held on 12/26/01, 6/28/02, 6/14/02, 12/3/02 before Judges Bernard Zimmerman, Claudia Wilken, Elizabeth D. Laporte, and hearing held before Special Master on 10/16/03 & 1/14/04 filed by Quanta Computer USA, Inc., Q-Lity Computer Inc., Quanta Computer Inc.,. (cp, COURT STAFF) (Filed on 3/29/2005) (Entered: 04/01/2005)

03/30/2005 Costs Taxed in amount of $126,844.80 against LG Electornics. re: [858]

BILL OF COSTS (cp, COURT STAFF) (Filed on 3/30/2005) Modified on 3/31/2005 (cp, COURT STAFF). (Entered: 03/30/2005)

03/30/2005 874 TRANSCRIPT DESIGNATION filed by First International Computer for proceedings held on 6/14/02, 6/28/02, 9/27/02, 1/14/03 before Judge Claudia Wilken, Elizabeth D. Laporte, and hearing held on 10/16/03 & 1/14/04 before Special Master (cp, COURT STAFF) (Filed on 3/30/2005) (Entered: 04/01/2005)

03/30/2005 875 AMENDED TRANSCRIPT DESIGNATION filed by Compal Electronics, Bizcom, Sceptre Technologies for proceedings held on 12/26/01, 6/28/02, 6/14/02, 12/3/02 before Judges Bernard Zimmerman, Claudia Wilken, Elizabeth D. Laporte.. (cp, COURT STAFF) (Filed on 3/30/2005) (Entered: 04/01/2005)

03/30/2005 876 NOTICE of lodging of transcripts for hearing held on 10/16/03 & 1/14/04 before Special Master Hon. Edward A. Infante (Ret.) filed by First International Computer (cp, COURT STAFF) (Filed on 3/30/2005) (Entered: 04/01/2005)

***

04/07/2005	885	SUPPLEMENTAL TRANSCRIPT DESIGNATION by LG Electonics Inc for proceedings held on 5/30/03 before Judge Claudia Wilken.. (cp, COURT STAFF) (Filed on 4/7/2005) Modified on 4/12/2005 (cp, COURT STAFF). (Entered: 04/12/2005)

***

04/08/2005		USCA Case Number 05-1304 for [871] Notice of Cross Appeal, filed by Q-Lity Computer Inc.,, Quanta Computer Inc.,, Quanta Computer USA, Inc.,. (cp, COURT STAFF) (Filed on 4/8/2005) (Entered: 04/12/2005)

***

04/14/2005	889	TRANSCRIPT of Proceedings held on 5/30/03 before Judge Claudia Wilken. Court Reporter: Raynee H. Mercado.. (cp, COURT STAFF) (Filed on 4/14/2005) (Entered: 04/19/2005)
04/14/2005	890	TRANSCRIPT of Proceedings held on 6/14/02 before Judge Claudia Wilken. Court Reporter: Raynee H. Mercado.. (cp, COURT STAFF) (Filed on 4/14/2005) (Entered: 04/19/2005)

04/14/2005	891	TRANSCRIPT of Proceedings held on 6/28/02 before Judge Claudia Wilken. Court Reporter: Raynee H. Mercado.. (cp, COURT STAFF) (Filed on 4/14/2005) (Entered: 04/19/2005)
		***
04/27/2005	897	TRANSCRIPT of Proceedings held on 12/26/01 before Judge Bernard Zimmerman. Tape Number: TC-50-01- Side A (cp, COURT STAFF) (Filed on 4/27/2005) (Entered: 04/27/2005)
		***
05/16/2005	905	TRANSCRIPT of Proceedings held on 1/14/03 before Judge Elizabeth D. Laporte. Court Reporter: Juanita Gonzalez.. (cp, COURT STAFF) (Filed on 5/16/2005) (Entered: 05/24/2005)
07/21/2005	906	ORDER by Judge Claudia Wilken Amending Clerk's Award of Costs re motions for review of Clerk's taxation of costs [878], [879], [880], [882], and Denying plaintiff's motion for stay of award of costs (cp, COURT STAFF) (Filed on 7/21/2005) (Entered: 07/22/2005)

09/11/2006	907	USCA JUDGMENT: affirmed in part, reversed in part, vacated in part, and remanded as to [871], [859] Notice of Appeal; Cost taxed in the amount of $10,637.92 (cp, COURT STAFF) (Filed on 9/11/2006) (Entered: 09/13/2006)
09/12/2006	908	CLERKS Letter Spreading Mandate to Counsel re [859], [871] Notice of Appeal (cp, COURT STAFF) (Filed on 9/12/2006) (Entered: 09/13/2006)
09/28/2006	909	ORDER SETTING CASE MANAGEMENT CONFERENCE AND DENYING SUMMARY ADJUDICATION OF NON-INFRINGEMENT OF THE '645 PATENT AND DESIGNATING CASES FOR ELECTRONIC COURT FILING. Case Management Conference set for 11/3/2006 01:30 PM.. Signed by Judge Claudia Wilken on 9/28/06. (scc, COURT STAFF) (Filed on 9/28/2006) Modified on 9/29/2006 (cp, COURT STAFF). (Entered: 09/28/2006)

***

10/20/2006	913	ORDER relating case. Signed by Judge Claudia Wilken on 10/20/06. (cp, COURT STAFF) (Filed on 10/20/2006) (Entered: 10/23/2006)

***

11/27/2006 918 JOINT CASE MANAGEMENT STATEMENT filed by LG Electonics Inc.. (Attachments: # 1 Exhibit A)(Prescott, Katherine) (Filed on 11/27/2006) (Entered: 11/27/2006)

***

12/27/2006 927 MINUTE ORDER AND CASE MANAGEMENT ORDER: Case referred to Private ADR. Further Case Management Conference set for 10/12/2007 10:00 AM. Jury Trial set for 1/22/2008 08:30 AM. Motion Hearing set for 10/12/2007 10:00 AM. Pretrial Conference set for 12/21/2007 01:30 PM.. Signed by Judge Claudia Wilken on 12/27/06. (scc, COURT STAFF) (Filed on 12/27/2006) (Entered: 12/27/2006)

***

01/10/2007 929 NOTICE by LG Electonics Inc. *and Defendants of Request for Jury Trial* (Prescott, Katherine) (Filed on 1/10/2007) (Entered: 01/10/2007)

***

02/23/2007 937 MOTION for Protective Order filed by First International Computer Inc., First International Computer of

America, Inc, First International Computer Inc., First International Computer of America, Inc, Quanta Computer Inc.. Motion Hearing set for 3/30/2007 10:00 AM in Courtroom 2, 4th Floor, Oakland. (Wied, Peter) (Filed on 2/23/2007) (Entered: 02/23/2007)

02/23/2007 938 Declaration of Terry D. Garnett in Support of 937 MOTION for Protective Order filed byFirst International Computer Inc., First International Computer of America, Inc, First International Computer Inc., First International Computer of America, Inc, Quanta Computer Inc.. (Related document(s)937) (Wied, Peter) (Filed on 2/23/2007) (Entered: 02/23/2007)

02/23/2007 939 Declaration of Jay C. Chiu in Support of 937 MOTION for Protective Order filed byFirst International Computer Inc., First International Computer of America, Inc, First International Computer Inc., First International Computer of America, Inc, Quanta Computer Inc.. (Related document(s)937) (Wied, Peter) (Filed on 2/23/2007) (Entered: 02/23/2007)

02/23/2007 940 Declaration of Miguel A. Sanqui in Support of 937 MOTION for

Protective Order filed byFirst International Computer Inc., First International Computer of America, Inc, First International Computer Inc., First International Computer of America, Inc, Quanta Computer Inc.. (Attachments: # 1 Exhibit A# 2 Exhibit B# 3 Exhibit C# 4 Exhibit D# 5 Exhibit E# 6 Exhibit F# 7 Exhibit G# 8 Exhibit H# 9 Exhibit I# 10 Exhibit J# 11 Exhibit K# 12 Exhibit L# 13 Exhibit M# 14 Exhibit N# 15 Exhibit O)(Related document(s)937) (Wied, Peter) (Filed on 2/23/2007) (Entered: 02/23/2007)

***

03/12/2007 945 Memorandum in Opposition *to Defendants First International Computer, Inc., First International Computer of America, Inc., Q-Lity Computer Inc., Quanta Computer Inc. and Quanta Computer USA, Inc.'s Motion for Protective Order* filed byLG Electonics Inc.. (Morris, David) (Filed on 3/12/2007) (Entered: 03/12/2007)

03/12/2007 946 Declaration of Thomas E. Nelson *in support of Opposition to Defendants First International Computer, Inc., First International Computer of America, Inc., Q-Lity Computer,*

Inc., Quanta Computer Inc. and Quanta Computer USA, Inc.'s Motion for Protective Order filed byLG Electonics Inc.. (Attachments: # 1 Exhibit 1# 2 Exhibit 2# 3 Exhibit 3# 4 Exhibit 4# 5 Exhibit 5# 6 Exhibit 6# 7 Exhibit 7# 8 Exhibit 8# 9 Exhibit 9)(Morris, David) (Filed on 3/12/2007) (Entered: 03/12/2007)

***

03/19/2007 949 Reply memorandum in support of 937 MOTION for Protective Order byQuanta Computer USA, Inc., Q-Lity Computer Inc., Q-Lity Computer Inc., Quanta Computer USA, Inc., Quanta Computer Inc., Quanta Computer Inc.. (Wied, Peter) (Filed on 3/19/2007) Modified on 3/20/2007 (cp, COURT STAFF). (Entered: 03/19/2007)

03/19/2007 950 Declaration of Peter J. Wied in Support of 937 MOTION for Protective Order filed byQuanta Computer USA, Inc., Q-Lity Computer Inc., Q-Lity Computer Inc., Quanta Computer USA, Inc., Quanta Computer Inc., Quanta Computer Inc.. (Attachments: # 1 Exhibit A# 2 Exhibit B# 3 Exhibit C)(Related document(s)937) (Wied, Peter) (Filed on 3/19/2007) Modified

on 3/20/2007 (cp, COURT STAFF). (Entered: 03/19/2007)

03/29/2007 951 MOTION to Compel *Discovery from Third Party Intel Corp. and Memorandum in Support* filed by LG Electonics Inc.. Motion Hearing set for 4/26/2007 12:00 PM. (Morris, David) (Filed on 3/29/2007) (Entered: 03/29/2007)

03/29/2007 952 Declaration of Richard M. Goodin *in Support of LG Electronics Inc.'s Motion to Compel Discovery from Third Party Intel Corp.* filed byLG Electonics Inc.. (Morris, David) (Filed on 3/29/2007) (Entered: 03/29/2007)

03/29/2007 953 Declaration of David M. Morris *in Support of Motion to Compel Discovery from Third Party Intel Corp.* filed byLG Electonics Inc.. (Morris, David) (Filed on 3/29/2007) (Entered: 03/29/2007)

03/29/2007 954 Declaration of Thomas E. Nelson *in Support of Motion to Compel Discovery From Third Party Intel Corp.* filed byLG Electonics Inc.. (Attachments: # 1 Exhibit 1# 2 Exhibit 2# 3 Exhibit 3# 4 Exhibit 4# 5 Exhibit 5# 6 Exhibit 6# 7 Exhibit 7# 8 Exhibit 8# 9 Exhibit 9# 10 Exhibit

10# 11 Exhibit 11# 12 Exhibit 12# 13 Exhibit 13# 14 Exhibit 14# 15 Exhibit 15# 16 Exhibit 16# 17 Exhibit 17# 18 Exhibit 18# 19 Exhibit 19# 20 Exhibit 21# 21 Exhibit 21# 22 Exhibit 22)(Morris, David) (Filed on 3/29/2007) (Entered: 03/29/2007)

03/29/2007 955 Proposed Order *Granting Motion to Compel Discovery from Third Party Intel Corp.* by LG Electonics Inc.. (Morris, David) (Filed on 3/29/2007) (Entered: 03/29/2007)

03/29/2007 956 MOTION to Seal filed by LG Electonics Inc.. Motion Hearing set for 4/26/2007 12:00 PM. (Morris, David) (Filed on 3/29/2007) (Entered: 03/29/2007)

03/29/2007 957 Declaration of David M. Morris *in Support of Miscellanous Administrative Request to File Documents Under Seal (L.R. 7-11; L.R. 79-5)* filed byLG Electonics Inc.. (Attachments: # 1 Exhibit A# 2 Exhibit B# 3 Exhibit C)(Morris, David) (Filed on 3/29/2007) (Entered: 03/29/2007)

03/29/2007 958 Proposed Order *Granting Miscellaneous Administrative Request to File Documents Under Seal* by LG Electonics Inc.. (Morris,

David) (Filed on 3/29/2007) (Entered: 03/29/2007)

***

04/02/2007 959 MOTION to Seal *Exhibits B & C of the Declaration of David M. Morris* filed by LG Electonics Inc.. Motion Hearing set for 4/26/2007 12:00 PM. (Morris, David) (Filed on 4/2/2007) (Entered: 04/02/2007)

04/02/2007 960 Proposed Order *Granting Miscellaneous Administrative Request to File Exhibits B & C of the Morris Declaration Under Seal* by LG Electonics Inc.. (Morris, David) (Filed on 4/2/2007) (Entered: 04/02/2007)

***

04/11/2007 963 NOTICE by LG Electonics Inc. *to Withdraw Motion to Compel Discovery from Intel Corp.* (Morris, David) (Filed on 4/11/2007) (Entered: 04/11/2007)

***

04/11/2007 965 NOTICE by Quanta Computer USA, Inc., Q-Lity Computer Inc., Q-Lity Computer Inc., Quanta Computer USA, Inc., Quanta Computer Inc., Quanta Computer Inc. *to Withdraw*

Motion for Protective Order (Attachments: # 1 Exhibit A# 2 Exhibit B)(Chen, Hua) (Filed on 4/11/2007) (Entered: 04/11/2007)

***

05/14/2007 967 NOTICE by LG Electonics Inc. *of Withdrawal of Miscellaneous Administrative Request to Seal Exhibits B & C of Morris Declaration* (Morris, David) (Filed on 5/14/2007) (Entered: 05/14/2007)

***

05/16/2007 969 NOTICE by LG Electonics Inc. *of Withdrawal of Miscellaneous Administrative Request to File Documents Under Seal* (Morris, David) (Filed on 5/16/2007) (Entered: 05/16/2007)

***

05/24/2007 971 STIPULATION of Dismissal *of Claims and Counterclaims Related to U.S. patent Nos. 4,918,645 and 5,892,509* by LG Electonics Inc.. (Morris, David) (Filed on 5/24/2007) (Entered: 05/24/2007)

05/30/2007 972 ORDER re 971 granting STIPULATION of Dismissal of Claims and Counterclaims Related to

U.S. patent Nos. 4,918,645 and 5,892,509. Signed by Judge Claudia Wilken on 5/30/07. (scc, COURT STAFF) (Filed on 5/30/2007) (Entered: 05/30/2007)

***

07/18/2007 988 MOTION for Protective Order *Seeking Relief from Plaintiff LG Electronics, Inc.'s Second Notice of Rule 30(b)(6) Deposition (Redacted)* filed by Quanta Computer USA, Inc., Q-Lity Computer Inc., Quanta Computer Inc.. Motion Hearing set for 8/29/2007 10:30 AM. (Prince, Daniel) (Filed on 7/18/2007) (Entered: 07/18/2007)

07/18/2007 989 Declaration of Daniel Prince in Support of 988 MOTION for Protective Order *Seeking Relief from Plaintiff LG Electronics, Inc.'s Second Notice of Rule 30(b)(6) Deposition (Redacted)* MOTION for Protective Order *Seeking Relief from Plaintiff LG Electronics, Inc.'s Second Notice of Rule 30(b)(6) Deposition (Redacted)* filed byQuanta Computer USA, Inc., Q-Lity Computer Inc., Quanta Computer Inc.. (Attachments: # 1 Exhibit A through C# 2 Exhibit D through E# 3 Exhibit F through G# 4 Exhibit H

through I# 5 Exhibit J through M# 6 Exhibit N Part I# 7 Exhibit N Part II# 8 Exhibit O through AA)(Related document(s)988) (Prince, Daniel) (Filed on 7/18/2007) (Entered: 07/18/2007)

***

07/26/2007 996 NOTICE by LG Electonics Inc. *of Filing of Motion to Compel in W.D. Tex.* (Attachments: # 1 Exhibit Motion to Compel in W.D. Tex; Pro Hac Vice application; Motion for Oral Hearing; Motion for Extension of Time to Answer; Exhibits 1-3 to Motion to Compel# 2 Exhibit Exhibits 4 and 4a to Motion to Compel# 3 Exhibit Exhibit 5 to Motion to Compel# 4 Exhibit Exhibits 6-18 to Motion to Compel)(Powers, Matthew) (Filed on 7/26/2007) (Entered: 07/26/2007)

08/07/2007 997 Memorandum in Opposition *to Quanta's Motion for Protective Order, Notice of Cross Motion, Motion to Compel Discovery and Memorandum in Support* filed byLG Electonics Inc.. (Morris, David) (Filed on 8/7/2007) (Entered: 08/07/2007)

08/07/2007 998 Declaration of Thomas E. Nelson *in Support of LG Electronics Inc.'s Opposition to Quanta's Motion for Protective Order, Notice of Cross Motion, Motion to Compel Discovery, and Memorandum in Support* filed byLG Electonics Inc.. (Attachments: # 1 Exhibit 1# 2 Exhibit 2# 3 Exhibit 3# 4 Exhibit 4# 5 Exhibit 5# 6 Exhibit 6# 7 Exhibit 7# 8 Exhibit 8# 9 Exhibit 9# 10 Exhibit 10# 11 Exhibit 11# 12 Exhibit 12# 13 Exhibit 13# 14 Exhibit 14# 15 Exhibit 15# 16 Exhibit 16# 17 Exhibit 17# 18 Exhibit 18# 19 Exhibit 19# 20 Exhibit 20# 21 Exhibit 21# 22 Exhibit 22# 23 Exhibit 23# 24 Exhibit 24# 25 Exhibit 25# 26 Exhibit 26# 27 Exhibit 27# 28 Exhibit 28# 29 Exhibit 29)(Morris, David) (Filed on 8/7/2007) (Entered: 08/07/2007)

***

08/15/2007 1017 NOTICE by LG Electonics Inc. *of Filing of Reply ISO Motion to Compel in W.D. Tex.* (Attachments: # 1 Reply ISO Motion to Compel# 2 Exhibit 1 to Reply ISO Motion to Compel)(Powers, Matthew) (Filed on 8/15/2007) (Entered: 08/15/2007)

***

08/15/2007 1019 Reply in support of re 988 MOTION for Protective Order and Opposition to cross-motion to compel filed byQuanta Computer USA, Inc., Q-Lity Computer Inc., Quanta Computer Inc.. (Prince, Daniel) (Filed on 8/15/2007) Modified on 8/16/2007 (cp, COURT STAFF). (Entered: 08/15/2007)

08/15/2007 1020 Declaration of Peter J. Wied in Support of 1019 Reply Memorandum, filed byQuanta Computer USA, Inc., Q-Lity Computer Inc., Quanta Computer Inc.. (Attachments: # 1 Exhibit A and B# 2 Exhibit C# 3 Exhibit D)(Related document(s)1019) (Prince, Daniel) (Filed on 8/15/2007) (Entered: 08/15/2007)

08/15/2007 1021 Declaration of K.C. Chang in Support of 1019 Reply Memorandum, filed byQuanta Computer USA, Inc., Q-Lity Computer Inc., Quanta Computer Inc.. (Related document(s)1019) (Prince, Daniel) (Filed on 8/15/2007) (Entered: 08/15/2007)

***

08/17/2007 1028 EXHIBITS P, R-Z re 989 Declaration of Daniel Prince, filed byQuanta Computer USA, Inc., Q-

Lity Computer Inc., Quanta Computer Inc.. (Related document(s)989) (cp, COURT STAFF) (Filed on 8/17/2007) ***FILED UNDER SEAL***

(Entered: 08/20/2007)

08/17/2007 1029 MOTION for Protective Order from plaintiff LG Electronic's second notice of Rule 30(B)(6) deposition filed by Quanta Computer USA, Inc., Q-Lity Computer Inc., Quanta Computer Inc.. (cp, COURT STAFF) (Filed on 8/17/2007) ***FILED UNDER SEAL***

(Entered: 08/20/2007)

***

08/24/2007 1031 Memorandum in Opposition to Quanta's motion for protective order, notice of cross motion, cross motion to compel discovery filed byLG Electonics Inc.. (cp, COURT STAFF) (Filed on 8/24/2007)

FILED UNDER SEAL

(Entered: 08/24/2007)

08/24/2007 1032 EXHIBIT 25 re 998 Declaration of Thomas E. Nelson in Support of LG

Electronics Inc.'s Opposition to Quanta's Motion for Protective Order, Notice of Cross Motion, Motion to Compel Discovery, and Memorandum in Support filed byLG Electonics Inc.. (Related document(s)998) (cp, COURT STAFF) (Filed on 8/24/2007)

*****FILED UNDER SEAL*****

(Entered: 08/24/2007)

08/24/2007 1033 EXHIBIT 26 re 998 Declaration of Thomas E. Nelson in Support of LG Electronics Inc.'s Opposition to Quanta's Motion for Protective Order, Notice of Cross Motion, Motion to Compel Discovery, and Memorandum in Support filed byLG Electonics Inc.. (Related document(s)998) (cp, COURT STAFF) (Filed on 8/24/2007)

*****FILED UNDER SEAL*****

(Entered: 08/24/2007)

08/24/2007 1034 EXHIBIT 27 re 998 Declaration of Thomas E. Nelson in Support of LG Electronics Inc.'s Opposition to Quanta's Motion for Protective Order, Notice of Cross Motion, Motion to Compel Discovery, and

Memorandum in Support, filed byLG Electonics Inc.. (Related document(s)998) (cp, COURT STAFF) (Filed on 8/24/2007)

*****FILED UNDER SEAL*****

(Entered: 08/24/2007)

09/06/2007 1035 NOTICE by LG Electonics Inc. *of Order Denying Quanta's Motion for Protective Order and Granting LG Electronics Inc.'s Motion to Compel* (Attachments: # 1 Exhibit A)(Morris, David) (Filed on 9/6/2007) (Entered: 09/06/2007)

09/07/2007 1036 MOTION for Summary Judgment filed by Quanta Computer USA, Inc., Q-Lity Computer Inc., Quanta Computer Inc.. Motion Hearing set for 10/12/2007 10:00 AM in Courtroom 2, 4th Floor, Oakland. (Attachments: # 1 Appendix A)(Wied, Peter) (Filed on 9/7/2007) (Entered: 09/07/2007)

09/07/2007 1037 Declaration of Vincent K. Yip in Support of 1036 MOTION for Summary Judgment filed byQuanta Computer USA, Inc., Q-Lity Computer Inc., Quanta Computer Inc.. (Attachments: # 1 Exhibit A-B# 2 Exhibit C# 3 Exhibit D# 4 Exhibit E (1 of 2)# 5 Exhibit E (2 of 2)# 6

Exhibit F# 7 Exhibit G# 8 Exhibit H# 9 Exhibit I# 10 Exhibit J# 11 Exhibit K# 12 Exhibit L# 13 Exhibit M# 14 Exhibit N# 15 Exhibit O# 16 Exhibit P# 17 Exhibit Q# 18 Exhibit R# 19 Exhibit S - BB# 20 Exhibit CC# 21 Exhibit DD# 22 Exhibit EE# 23 Exhibit FF# 24 Exhibit GG# 25 Exhibit HH# 26 Exhibit II# 27 Exhibit JJ# 28 Exhibit KK# 29 Exhibit LL# 30 Exhibit MM# 31 Exhibit NN# 32 Exhibit OO - QQ# 33 Exhibit RR# 34 Exhibit SS - TT# 35 Exhibit UU# 36 Exhibit VV)(Related document(s)1036) (Wied, Peter) (Filed on 9/7/2007) Modified on 9/10/2007 (cp, COURT STAFF). (Entered: 09/08/2007)

09/08/2007 1038 Proposed Order re 1036 MOTION for Summary Judgment by Quanta Computer USA, Inc., Q-Lity Computer Inc., Quanta Computer Inc.. (Wied, Peter) (Filed on 9/8/2007) (Entered: 09/08/2007)

***

09/10/2007 1052 EXHIBITS A,B,F re 1037 Declaration of Vincent K. Yip in Support of 1036 MOTION for Summary Judgment filed byQuanta Computer USA, Inc., Q-Lity Computer Inc., Quanta Computer

Inc.. (Related document(s)1037) (cp, COURT STAFF) (Filed on 9/10/2007)

*****FILED UNDER SEAL*****

(Entered: 09/18/2007)

09/10/2007 1053 EXHIBITS M,Q,S,T,U,V,W,X,Y re 1037 Declaration of Vincent K. Yip in Support of 1036 MOTION for Summary Judgment filed byQuanta Computer USA, Inc., Q-Lity Computer Inc., Quanta Computer Inc.. (Related document(s)1037) (cp, COURT STAFF) (Filed on 9/10/2007)

*****FILED UNDER SEAL*****

(Entered: 09/18/2007)

09/10/2007 1054 EXHIBITS Z,AA,BB,JJ,MM,OO,PP,QQ,SS,TT re 1037 Declaration of Vincent K. Yip in Support of 1036 MOTION for Summary Judgment filed byQuanta Computer USA, Inc., Q-Lity Computer Inc., Quanta Computer Inc.. (Related document(s)1037) (cp, COURT STAFF) (Filed on 9/10/2007)

*****FILED UNDER SEAL*****

(Entered: 09/18/2007)

09/11/2007 1043 ORDER STRIKING DEFENDANTS' MOTION FOR SUMMARY JUDGMENT. The Court STRIKES the memorandum of points and authorities. Defendants shall file an amended version of the memorandum, including a statement of facts, within five days of this order.. Signed by Judge Claudia Wilken on 9/11/07. (scc, COURT STAFF) (Filed on 9/11/2007) (Entered: 09/11/2007)

***

09/13/2007 1045 Amended MOTION for Summary Judgment filed by Quanta Computer USA, Inc., Q-Lity Computer Inc., Quanta Computer Inc.. Motion Hearing set for 10/11/2007 02:00 PM in Courtroom 2, 4th Floor, Oakland. (Attachments: # 1 Appendix A)(Wied, Peter) (Filed on 9/13/2007) (Entered: 09/13/2007)

***

09/14/2007 1051 AMENDED MOTION for Summary Judgment filed by Quanta Computer USA, Inc., Q-Lity Computer Inc., Quanta Computer Inc.. (cp, COURT STAFF) (Filed on 9/14/2007)

*****FILED UNDER SEAL*****

(Entered: 09/18/2007)

***

09/19/2007 1055 OBJECTIONS to re 1035 Notice (Other) *Order Denying Motion for Protective Order* by Quanta Computer USA, Inc., Q-Lity Computer Inc., Quanta Computer Inc.. (Wied, Peter) (Filed on 9/19/2007) (Entered: 09/19/2007)

09/21/2007 1056

*****FILED IN ERROR, DOCUMENT BLOCKED, SEE REFILED DOCUMENT #1078*****

Memorandum in Opposition *to Quanta's Motion for Summary Judgment* filed byLG Electonics Inc.. (Morris, David) (Filed on 9/21/2007) Modified on 9/26/2007 (cp, COURT STAFF). (Entered: 09/21/2007)

09/21/2007 1057 Declaration of Nathan W. McCutcheon *in Support of Opposition to Quanta's Motion for Summary Judgment* filed byLG Electonics Inc.. (Attachments: # 1 Exhibit 1# 2 Exhibit 2# 3 Exhibit 3# 4 Exhibit 4# 5 Exhibit 5# 6 Exhibit 6# 7 Exhibit 7# 8 Exhibit 8# 9 Exhibit 9#

10 Exhibit 10# 11 Exhibit 11# 12 Exhibit 12# 13 Exhibit 13# 14 Exhibit 14# 15 Exhibit 15# 16 Exhibit 16# 17 Exhibit 17# 18 Exhibit 18# 19 Exhibit 19# 20 Exhibit 20# 21 Exhibit 21# 22 Exhibit 22# 23 Exhibit 23# 24 Exhibit 24# 25 Exhibit 25# 26 Exhibit 26# 27 Exhibit 27# 28 Exhibit 28# 29 Exhibit 29# 30 Exhibit 30# 31 Exhibit 31# 32 Exhibit 32# 33 Exhibit 33# 34 Exhibit 34# 35 Exhibit 35# 36 Exhibit 36# 37 Exhibit 37# 38 Exhibit 38# 39 Exhibit 39# 40 Exhibit 40# 41 Exhibit 41)(Morris, David) (Filed on 9/21/2007) (Entered: 09/21/2007)

09/21/2007 1058 ***** DECLARATION FILED IN ERROR. DOCUMENT LOCKED. SEE REFILED DOCUMENT #1079 *****
Declaration of Donald Alpert *in Support of Opposition to Quanta's Motion for Summary Judgment* filed byLG Electonics Inc.. (Attachments: # 1 Exhibit A# 2 Exhibit B# 3 Exhibit C# 4 Exhibit D)(Morris, David) (Filed on 9/21/2007) Modified on 9/25/2007 (feriab, COURT STAFF). Modified on 9/26/2007 (cp, COURT STAFF). (Entered: 09/21/2007)

09/21/2007 1059 ***** Declaration of William K. Hoffman FILED IN ERROR. DOCUMENT LOCKED. SEE**

REFILED DOCUMENT #1080. ***

Declaration of William K. Hoffman *in Support of Opposition to Quanta's Motion for Summary Judgment* filed byLG Electonics Inc.. (Attachments: # 1 Exhibit A)(Morris, David) (Filed on 9/21/2007) Modified on 9/25/2007 (feriab, COURT STAFF). Modified on 9/26/2007 (cp, COURT STAFF). (Entered: 09/21/2007)

09/21/2007 1060 ***** EXHIBIT G and Declaration of Alan J. Smith FILED IN ERROR. DOCUMENT LOCKED. SEE REFILED DECLARATION, DOCUMENT #1081 *****

Declaration of Alan J. Smith *in Support of Opposition to Quanta's Motion for Summary Judgment* filed byLG Electonics Inc.. (Attachments: # 1 Exhibit A# 2 Exhibit B# 3 Exhibit C# 4 Exhibit D# 5 Exhibit E# 6 Exhibit F# (7) Exhibit G# 8 Exhibit H)(Morris, David) (Filed on 9/21/2007) Modified on 9/21/2007 (feriab, COURT STAFF). Modified on 9/25/2007 (feriab, COURT STAFF). Modified on 9/26/2007 (cp, COURT STAFF). (Entered: 09/21/2007)

***

09/21/2007 1074 ***** EXHIBIT of F DOCUMENT 1060. *****
EXHIBITS *CORRECTION OF DOCKET # [1060-6].* filed byLG Electonics Inc.. (Morris, David) (Filed on 9/21/2007) Modified on 9/21/2007 (feriab, COURT STAFF). (Entered: 09/21/2007)

09/21/2007 1075 ***** EXHIBIT G OF DCUMENT 1060. *****
EXHIBITS *CORRECTION OF DOCKET # [1060-6].* filed byLG Electonics Inc.. (Morris, David) (Filed on 9/21/2007) Modified on 9/21/2007 (feriab, COURT STAFF). (Entered: 09/21/2007)

09/21/2007 1076 MOTION to Remove Incorrectly Filed Document *Exhibit H of the Alan J. Smith Declaration in Support of LG Electronics Inc.'s Opposition to Quanta's Motion for Summary Judgment* filed by LG Electonics Inc.. (Morris, David) (Filed on 9/21/2007) (Entered: 09/21/2007)

09/21/2007 1077 Proposed Order *Granting Motion of LG Electronics to Remove from the Public Docket Exhibit H of the Alan J. Smith Declaration in Support of LG Electronics Inc.'s Opposition to Quanta's Motion for Summary*

Judgment by LG Electonics Inc.. (Morris, David) (Filed on 9/21/2007) (Entered: 09/21/2007)

09/25/2007 1078 *(CORRECTION OF DOCKET # [1056]) Opposition to Quanta's Motion for Summary Judgment.* filed by LG Electonics Inc.. (Morris, David) (Filed on 9/25/2007) Modified on 9/26/2007 (cp, COURT STAFF). (Entered: 09/25/2007)

09/25/2007 1079 *(CORRECTION OF DOCKET # 1058) - Declaration of Donald Alpert in Support of LG Electronics Inc.'s Opposition to Quanta's Motion for Summary Judgment.* filed by LG Electonics Inc.. (Morris, David) (Filed on 9/25/2007) Modified on 9/26/2007 (cp, COURT STAFF). (Entered: 09/25/2007)

09/25/2007 1080 *(CORRECTION OF DOCKET # 1059) - Declaration of William K. Hoffman in Support of LG Electronics Inc.'s Opposition to Quanta's Motion for Summary Judgment.* filed by LG Electonics Inc.. (Morris, David) (Filed on 9/25/2007) Modified on 9/26/2007 (cp, COURT STAFF). (Entered: 09/25/2007)

09/25/2007 1081 *(CORRECTION OF DOCKET # 1060) - Declaration of Alan J. Smith*

in Support of LG Electronics Inc.'s Opposition to Quanta's Motion for Summary Judgment. filed by LG Electonics Inc.. (Morris, David) (Filed on 9/25/2007) Modified on 9/26/2007 (cp, COURT STAFF). (Entered: 09/25/2007)

09/25/2007 1082 MOTION to Remove Incorrectly Filed Document *LG Electronics Inc.'s Opposition to Quanta's Motion for Summary Judgment, the Declaration of Donald Alpert, the Declaration of William K. Hoffman, and the Declaration of Alan J. Smith* filed by LG Electonics Inc.. (Morris, David) (Filed on 9/25/2007) (Entered: 09/25/2007)

***

09/28/2007 1089 JOINT STATEMENT *Regarding Grant of Certiorari by the U.S. Supreme Court* filed by Quanta Computer USA, Inc., LG Electonics Inc., Q-Lity Computer Inc., Quanta Computer Inc.. (Prince, Daniel) (Filed on 9/28/2007) Modified on 10/1/2007 (cp, COURT STAFF). (Entered: 09/28/2007)

09/28/2007 1090 Reply brief re 1045 Amended MOTION for Summary Judgment filed byQuanta Computer USA, Inc.,

Q-Lity Computer Inc., Quanta Computer Inc.. (Wied, Peter) (Filed on 9/28/2007) Modified on 10/1/2007 (cp, COURT STAFF). (Entered: 09/28/2007)

09/28/2007 1091 Declaration of Hua Chen in Support of 1090 Reply to Opposition *to Motion for Summary Judgment* filed by Quanta Computer USA, Inc., Q-Lity Computer Inc., Quanta Computer Inc.. (Attachments: # 1 Exhibit A through E)(Related document(s)1090) (Wied, Peter) (Filed on 9/28/2007) (Entered: 09/28/2007)

***

10/01/2007 1095 ORDER re 1055 DENYING DEFENDANTS' OBJECTIONS TO THE SPECIAL MASTER'S ORDER DENYING DEFENDANT'S MOTION FOR A PROTECTIVE ORDER. Signed by Judge Claudia Wilken on 10/1/07. (scc, COURT STAFF) (Filed on 10/1/2007) (Entered: 10/01/2007)

10/01/2007 1096 ORDER REGARDING COURT-APPOINTED EXPERT AND STAYING CASE.. Signed by Judge Claudia Wilken on 10/2/07. (scc, COURT STAFF) (Filed on 10/1/2007) (Entered: 10/01/2007)

Matthew T. Powers (SBN 124493)
SKJERVEN MORRILL
MacPHERSON LLP
25 Metro Drive, Suite 700
San Jose, California 95110
Phone: (408) 453-9200
Facsimile: (408) 453-7979

[ORIGINAL FILED]
[Apr. 16 '01]
[Illegible]

Thomas B. Kenworthy
Nathan W. McCutcheon
David M. Morris
Collin W. Park
MORGAN, LEWIS & BOCKIUS LLP
1800 M Street, N.W.
Washington, DC 20036-5869
Telephone: (202) 467-7000
Facsimile: (202) 467-7176

Attorneys for Plaintiff LG ELECTRONICS INC.

UNITED STATES DISTRICT COURT
NORTHERN DISTRICT OF CALIFORNIA
SAN JOSE DIVISION

LG ELECTRONICS INC., Plaintiff, v. Q-LITY COMPUTER INC., QUANTA COMPUTER INC., and QUANTA COMPUTER USA, INC., Defendants.	No. C01-20319 COMPLAINT FOR PATENT INFRINGEMENT [DEMAND FOR JURY TRIAL]

Plaintiff LG Electronics Inc. ("LGE") complains of defendants Q-Lity Computer Inc., Quanta Computer Inc., and Quanta Computer USA, Inc. (collectively, "defendants") as follows:

THE PARTIES

1. Plaintiff LGE is a corporation organized under the laws of the Republic of Korea and having a place of business at LG Twin Towers, 20, Yoido-dong, Youngdungpo-gu, Seoul 150-721 Korea.

2. On information and belief, defendant Q-Lity Computer Inc. ("Q-Lity") is a corporation organized and existing under the laws of the State of California and having a place of business at 46530 Northport Loop East, Fremont, CA 94538.

3. On information and belief, defendant Quanta Computer Inc. ("Quanta") is a corporation organized and existing under the laws of Taiwan with a principal place of business at No. 188, Wen Hwa 2nd Rd., Kuei Shan Hsiang, Tao Yuan Shien, Taiwan R.O.C.

4. On information and belief, defendant Q-Lity is a subsidiary of defendant Quanta.

5. On information and belief, defendant Quanta Computer USA, Inc. ("Quanta USA") is a corporation organized under the laws of the State of California and having a place of business at 46530 Northport Loop East, Fremont, CA 94538.

6. On information and belief, defendant Quanta USA is a wholly owned subsidiary of defendant Quanta.

JURISDICTION

7. This is an action for patent infringement arising under the patent laws of the United States, 35 U.S.C. § 1, *et seq.* This Court has jurisdiction over the subject matter of this patent action pursuant to 28 U.S.C.

§§ 1331 and 1338(a).

VENUE

8. Venue in this judicial district and division is proper pursuant to 28 U.S.C. §§ 1391(b), 1391(c), 1391(d), 1400(b) and Civil L.R. 3-2(c).

INTRADISTRICT ASSIGNMENT

9. This is a patent infringement action excepted from Civil L.R. 3-2(c), and has been filed in this division because defendants, Q-Lity and Quanta USA, reside in this division. Plaintiff has filed concurrently herewith a Notice of Related Cases pursuant to Civil L.R. 3-12, identifying four related cases now pending in various divisions of this District.

LGE'S PATENTS-IN-SUIT

10. On April 17, 1990, the United States Patent and Trademark Office ("USPTO") issued U.S. Patent No. 4,918,645 ("the '645 Patent"), entitled "Computer Bus Having Page Mode Memory Access," to Brian E. J. Lagoy, Jr., who assigned his rights in the '645 patent to Wang Laboratories, Inc. ("Wang"). The '645 patent was later assigned to LGE.

11. On July 3, 1990, the USPTO issued U.S. Patent No. 4,939,641 ("the '641 Patent"), entitled "Multi-Processor System With Cache Memories," to Martin J. Schwartz and Robert D. Becker, who assigned their rights in the '641 patent to Wang. The '641 patent was later assigned to LGE.

12. On May 15, 1990, the USPTO issued U.S. Patent No. 4,926,419 ("the '419 Patent"), entitled "Priority Apparatus," to David L. Whipple, who assigned his rights in the '419 patent to Wang. The '419 patent was later assigned to LGE.

13. On December 31, 1991, the USPTO issued U.S. Patent No. 5,077,733 ("the '733 Patent"), entitled

"Priority Apparatus Having Programmable Node Dwell Time," to David L. Whipple, who assigned his rights in the '733 patent to Wang. The '733 patent was later assigned to LGE.

14. On January 3, 1995, the USPTO issued U.S. Patent No. 5,379,379 ("the '379 Patent"), entitled "Memory Control Unit With Selective Exception Of Queued Read And Write Requests," to Robert D. Becker, Martin J. Schwartz, Kevin H. Curcuru, and Kenneth J. Eng, who assigned their rights to Wang. The '379 patent was later assigned to LGE.

15. On April 6, 1999, the USPTO issued U.S. Patent No. 5,892,509 ("the '509 Patent"), entitled "Image Processing Apparatus Having Common And Personal Memory And Capable Of Viewing And Editing An Image Commonly With A Remote Image Processing Apparatus Over A Network," to Thomas Jakobs, Wayne D. Jung, Richard A. Karlin, Leonard Reiffel, Raphael K. Tam, Timothy T. Tutt, and Michael F. Dunk, who assigned their rights to LG Semicon Co., Ltd. The '509 patent was later assigned to LGE.

16. LGE owns all legal rights, title, and interests in, to, and under the '645, '641, '419, '733, '379, and '509 Patents (collectively, "Patents-in-Suit"), including the right to bring this suit for damages and injunctive relief for infringement thereof.

COUNT I – INFRINGEMENT BY Q-LITY

17. LGE restates and incorporates by reference the averments set forth in Paragraphs 1-16 of this Complaint as if set forth in full herein.

18. Defendant Q-Lity has infringed and continues to infringe one or more claims of the Patents-in-Suit by making, selling, offering to sell, using, or importing into the United States computer systems embodying the

claimed inventions of the Patents-in-Suit, or by contributing thereto or inducing others to do so.

19. LGE has sustained damages as a result of Q-Lity's infringement of the Patents-in-Suit and will continue to sustain damages in the future unless Q-Lity is permanently enjoined by this Court from further infringement of the Patents-in-Suit.

COUNT II – INFRINGEMENT BY QUANTA

20. LGE restates and incorporates by reference the averments set forth in Paragraphs 1-19 of this Complaint as if set forth in full herein.

21. Quanta has infringed and continues to infringe one or more claims of the Patents-in-Suit by making, selling, offering to sell, using, or importing into the United States computer systems embodying the claimed inventions of the Patents-in-Suit, or by contributing thereto or inducing others to do so.

22. Quanta was notified of its activities infringing the Patents-in-Suit at least as early as December 1999. Thus, Quanta has had actual knowledge of its infringement of the Patents-in-Suit since at least December of 1999, and the infringement of the Patents-in-Suit by Quanta has been, and continues to be, deliberate and willful. On information and belief, Quanta will continue to infringe the Patents-in-Suit unless restrained and enjoined by this Court.

23. LGE has sustained damages as a result of Quanta's infringement of the Patents-in-Suit and will continue to sustain damages in the future unless Quanta is permanently enjoined by this Court from further infringement of the Patents-in-Suit.

COUNT III – INFRINGEMENT BY QUANTA USA

24. LGE restates and incorporates by reference the

averments set forth in Paragraphs 1-22 of this Complaint as if set forth in full herein.

25. Defendant Quanta USA has infringed and continues to infringe one or more claims of the Patents-in-Suit by making, selling, offering to sell, using, or importing into the United States computer systems embodying the claimed inventions of the Patents-in-Suit, or by contributing thereto or inducing others to do so.

26. LGE has sustained damages as a result of Quanta USA's infringement of the Patents-in-Suit and will continue to sustain damages in the future unless Quanta USA is permanently enjoined by this Court from further infringement of the Patents-in-Suit.

WHEREFORE, LGE prays for the following relief:

PRAYER FOR RELIEF

1. A judgment that defendant Q-Lity has infringed each of the Patents-in-Suit.

2. A judgment that defendant Quanta has infringed each of the Patents-in-Suit.

3. A judgment that infringement of each of the Patents-in-Suit by defendant Quanta has been willful.

4. A judgment that defendant Quanta USA has infringed each of the Patents-in-Suit.

5. An injunction permanently enjoining defendant Q-Lity, its officers, directors, agents, servants, employees, attorneys, parents, subsidiaries, and affiliates, its assigns and successors in interest, and all those acting, directly or indirectly, in concert under or participation with any of the foregoing who receive notice of the injunction, including distributors and customers, from continuing acts of infringement of the Patents-in-Suit, directly, contributorily, or by inducement.

6. An injunction permanently enjoining defendant Quanta, its officers, directors, agents, servants, employees, attorneys, parents, subsidiaries, and affiliates, its assigns and successors in interest, and all those acting, directly or indirectly, in concert under or participation with any of the foregoing who receive notice of the injunction, including distributors and customers, from continuing acts of infringement of the Patents-in-Suit, directly, contributorily, or by inducement.

7. An injunction permanently enjoining defendant Quanta USA, its officers, directors, agents, servants, employees, attorneys, parents, subsidiaries, and affiliates, its assigns and successors in interest, and all those acting, directly or indirectly, in concert under or participation with any of the foregoing who receive notice of the injunction, including distributors and customers, from continuing acts of infringement of the Patents-in-Suit, directly, contributorily, or by inducement.

8. A judgment and order requiring defendant Q-Lity to pay damages pursuant to 35 U.S.C. § 284, together with pre-judgment interest.

9. A judgment and order requiring defendant Quanta to pay damages pursuant to 35 U.S.C. § 284, including treble damages for willful infringement as provided under 35 U.S.C. § 284, together with pre-judgment interest.

10. A judgment and order requiring defendant Quanta USA to pay damages pursuant to 35 U.S.C. § 284, together with pre-judgment interest.

11. A finding that this is an exceptional case and an order awarding reasonable attorneys' fees to LGE pursuant to 35 U.S.C. § 285.

12. Any and all such other and further relief that this Court may deem just and appropriate.

JURY TRIAL DEMAND

Plaintiff hereby demands a trial by jury on all issues properly triable by jury.

CERTIFICATION OF INTERESTED ENTITIES OR PERSONS (Civil L.R. 3-16)

Plaintiff, pursuant to Civil Local Rule 3-16, hereby makes the following Certification of Interested Entities or Persons.

Pursuant to Civil Local Rule 3-16, the undersigned certifies that there is nothing to report regarding persons, associations of persons, firms, partnerships, corporations (including parent corporations) or other entities (i) that have a financial interest in the subject matter in controversy or in a party to the proceeding, or (ii) that have a non-financial interest in that subject matter or in a party that could be substantially affected by the outcome of this proceeding.

DATED: April 16, 2001 SKJERVEN MORRILL MacPHERSON LLP

By:/s/ Matthew T. Powers
Matthew T. Powers

Thomas B. Kenworthy
Nathan W. McCutcheon
David M. Morris
Collin W. Park
MORGAN, LEWIS & BOCKIUS LLP

Attorneys for Plaintiff
LG ELECTRONICS
INC.

[Attachment to Declaration of David M. Morris in Support of LGE's Cross-Motion for Partial Summary Judgment (N.D. Cal. May 3, 2002), and in Federal Circuit Joint Appendix at A 3960.]

Intel Semiconductor Ltd
32/F., Two Pacific Place
88 Queensway, Central.
Hong Kong

Tel: (852) 2844-4507
Fax:(852) 2844-4470

[INTEL LOGO]

September 4, 2000

Mr. David Shing
Quanta Computer Inc.
188, Wen Hwa 2nd Road
Kuei Shan Hsiang,
Taoyuan
Taiwan, R O.C.

By Fax (886-3-327-2211) and Courier

Re: LG Electronics Inc.

Dear Mr. Shing:

It has recently come to Intel's attention that LG Electronics Inc. (LGE) has contacted you and claimed that certain of your products infringe certain of LGE's patents. I am writing to notify you that Intel recently obtained a broad patent license from LGE. This patent license ensures that any Intel product that you purchase is licensed by LGE and thus does not infringe any patent held by LGE or any of LGE's subsidiaries.

This patent license is consistent with Intel's policy of standing behind its products. Please note however that

while the patent license that LGE granted to Intel covers Intel's products, it does not extend, expressly or by implication, to any product that you may make by combining an Intel product with any non-Intel product. If you have any questions or if you would like further clarification of the status of any particular Intel product under the LGE patent license, please do not hesitate to contact me.

Sincerely,

/s/ John E. Matheson
John E. Matheson
Asia Counsel

73 53064b (9) 74pg

Supreme Court, U.S.
FILED
NOV 5 - 2007
OFFICE OF THE CLERK

No. 06-937

In the Supreme Court of the United States

QUANTA COMPUTER, INC., QUANTA COMPUTER USA, INC., Q-LITY COMPUTER, INC.,
PETITIONERS,

v.

LG ELECTRONICS, INC.,
RESPONDENT.

ON WRIT OF CERTIORARI TO THE UNITED STATES COURT OF APPEALS FOR THE FEDERAL CIRCUIT

BRIEF FOR PETITIONERS

TERRENCE D. GARNETT
VINCENT K. YIP
PETER WIED
PAUL, HASTINGS, JANOFSKY & WALKER LLP
515 SOUTH FLOWER STREET
25TH FLOOR
LOS ANGELES, CA 90071
(213) 683-6000

MAUREEN E. MAHONEY
Counsel of Record
J. SCOTT BALLENGER
BARRY J. BLONIEN
MELISSA B. ARBUS
ANNE W. ROBINSON
LATHAM & WATKINS LLP
555 11TH STREET N.W.
SUITE 1000
WASHINGTON, D.C. 20004
(202) 637-2200

Counsel for Petitioners

Additional Counsel Listed on Inside Cover

MAXWELL A. FOX
PAUL, HASTINGS,
JANOFSKY
& WALKER LLP
34 F ARK MORI BUILDING
P.O. BOX 577
12-32 AKASAKA 1-CHOME
MINATO-KU, TOKYO 107-
6034
JAPAN
813 6229 6100

QUESTION PRESENTED

Whether the Federal Circuit erred by holding, in conflict with decisions of this Court and other courts of appeals, that respondent's patent rights were not exhausted by its license agreement with Intel Corporation, and Intel's subsequent sale of product under the license to petitioners.

PARTIES TO THE PROCEEDING

Pursuant to Rule 24.1, the following list identifies all of the parties appearing here and before the Federal Circuit Court of Appeals.

The petitioners here and appellees and cross-appellants below are Quanta Computer, Inc., Quanta Computer USA, Inc., and Q-Lity Computer, Inc. The additional appellees below were Bizcom Electronics, Inc., Compal Electronics, Inc., Everex Systems, Inc., First International Computer, Inc., First International Computer of America, Inc., and Sceptre Technologies, Inc.

The appellant and cross-appellee below and respondent here is LG Electronics, Inc.

RULE 29.6 STATEMENT

Quanta Computer, Inc. is the parent corporation of Quanta Computer USA, Inc. and Q-Lity Computer, Inc. No other publicly held company owns 10% or more of the stock of any of those companies.

TABLE OF CONTENTS

Page

QUESTION PRESENTED i

PARTIES TO THE PROCEEDING ii

RULE 29.6 STATEMENT iii

TABLE OF CONTENTS iv

TABLE OF AUTHORITIES vi

OPINIONS BELOW 1

JURISDICTION 1

STATUTORY PROVISIONS INVOLVED 1

STATEMENT OF THE CASE 1

SUMMARY OF THE ARGUMENT 11

ARGUMENT 15

I. AN AUTHORIZED SALE OF A PRODUCT THAT EMBODIES ESSENTIAL FEATURES OF THE PATENT AND HAS NO REASONABLE NON-INFRINGING USE EXHAUSTS THE PATENT 15

A. An Authorized Sale Exhausts A Patentee's Statutory Rights 16

B. Exhaustion Is Not An "Implied License" That Can Be Repudiated By The Patentee 25

C. Licenses Granted To Manufacturing Licensees Can Carry Enforceable Conditions 28

TABLE OF CONTENTS—Continued

Page

D. Exhaustion Does Not Depend on Whether the Patentee's "Conditions" Would Otherwise Violate Antitrust or Misuse Principles 30

E. Exhaustion Can Be Triggered By Sale Of An Unfinished Article Or Components 33

F. Patent Exhaustion Applies To Method Claims 35

II. LGE'S PATENT RIGHTS WERE EXHAUSTED BY INTEL'S AUTHORIZED SALES TO QUANTA 38

III. THIS COURT SHOULD ADHERE TO THE TRADITIONAL EXHAUSTION RULE 44

A. Any Change Should Come From Congress 44

B. Sound Policy and Economic Analysis Support The Traditional Exhaustion Rule 46

CONCLUSION 54

APPENDIX:

35 U.S.C. § 154(a)(1) 1a

35 U.S.C. § 261 ..... 1a

35 U.S.C. § 271(a)-(c) 1a

TABLE OF AUTHORITIES

Page(s)

CASES

Adams v. Burke,
84 U.S. (17 Wall.) 453 (1873) 1, 17, 27

Albright v. Teas,
106 U.S. 613 (1883) 20

Aro Manufacturing Co. v. Convertible Top Replacement Co.,
365 U.S. 336 (1961) 26, 27

Aro Manufacturing Co. v. Convertible Top Replacement Co.,
377 U.S. 476 (1964) 26, 27

B.B. Chemical Co. v. Ellis,
314 U.S. 495 (1942) 34

Bailey v. Baker Ice Machine Co.,
239 U.S. 268 (1915) 20, 22

Baldwin-Lima-Hamilton Corp. v. Tatnall Measuring System Co.,
169 F. Supp. 1 (E.D. Pa. 1958) 40

Bandag, Inc. v. Al Bolser's Tire Stores, Inc.,
750 F.2d 903 (Fed. Cir. 1984) 11, 38

Bauer & Cie v. O'Donnell,
229 U.S. 1 (1913) 21, 22, 31

TABLE OF AUTHORITIES—Continued

Page(s)

Bement v. National Harrow Co.,
186 U.S. 70 (1902) 28

Bloomer v. McQuewan,
55 U.S. (14 How.) 539 (1853) 16

Bloomer v. Millinger,
68 U.S. (1 Wall.) 340 (1864) 13, 16, 54

Bobbs-Merrill Co. v. Straus,
210 U.S. 339 (1908) 21

Bonito Boats, Inc. v. Thunder Craft Boats, Inc.,
489 U.S. 141 (1989) 45

Boston Store v. American Graphophone Co.,
246 U.S. 8 (1918) 31

Brulotte v. Thys Co.,
379 U.S. 29 (1964) 30

Callanan v. Keesville, Ausable Chasm & Lake Champlain Railroad Co.,
199 N.Y. 268 (1910) 44

Christianson v. Colt Industries Operating Corp.,
486 U.S. 800 (1988) 23

Conway's Executors & Devisees v. Alexander,
11 U.S. (7 Cranch) 218 (1812) 20

TABLE OF AUTHORITIES—Continued

Page(s)

Dawson Chemical Co. v. Rohm & Haas Co.,
448 U.S. 176 (1980) 23, 27, 37

Deepsouth Packing Co. v. Laitram Corp.,
406 U.S. 518 (1972) 45

E&L Consulting, Ltd. v. Doman Industrial,
472 F.3d 23 (2d Cir. 2006), *cert. denied*, 2007
U.S. LEXIS 10366 (Oct. 1, 2007) 49

Ethyl Gasoline Corp. v. United States,
309 U.S. 436 (1940) 35

Fosdick v. Schall,
99 U.S. (9 Otto) 235 (1879) 19

General Talking Pictures Corp. v. Western Electric Co.,
304 U.S. 175 (1938) 29

Glass Equipment Development, Inc. v. Besten, Inc.,
174 F.3d 1337 (Fed. Cir. 1999) 11

Glenayre Electrics, Inc. v. Jackson,
443 F.3d 851 (Fed. Cir. 2006) 53

Harkness v. Russell,
118 U.S. 663 (1886) 19

Henry v. A.B. Dick Co.,
224 U.S. 1 (1912) 2, 20, 21, 26

TABLE OF AUTHORITIES—Continued

Page(s)

Hewlett-Packard Co. v. Repeat-O-Type Stencil Manufacturing Corp., 123 F.3d 1445 (Fed. Cir. 1997), *cert. denied*, 523 U.S. 1022 (1998) 25, 37, 41

Intel Corp. v. ULSI System Technology, Inc., 995 F.2d 1566 (Fed. Cir. 1993) 37

Intel Corp. v. ULSI System Technology, Inc., 782 F. Supp. 1467 (D. Or. 1991) 37

Jazz Photo Corp. v. ITC, 264 F.3d 1094 (Fed. Cir. 2001), *cert. denied*, 536 U.S. 950 (2002) 41

John D. Park & Sons Co. v. Hartman, 153 Fed. 24 (6th Cir. 1907) 19

Keeler v. Standard Folding Bed Co., 157 U.S. 659 (1895) 15, 17, 46, 49

Kendall v. Winsor, 62 U.S. (21 How.) 322 (1858) 46

Keppell v. Bailey, 39 Eng. Rep. 1042 (1834) 47

Leitch Manufacturing v. Barber Co., 302 U.S. 458 (1938) 27, 34, 36

TABLE OF AUTHORITIES—Continued

Page(s)

Lucent Technologies, Inc. v. Gateway, Inc.,
2007 U.S. Dist. LEXIS 57135 (S.D. Cal. Aug. 6, 2007) 53

Mallinckrodt, Inc. v. Medipart, Inc.,
976 F.2d 700 (Fed. Cir. 1992) 12, 30

Merrill Lynch, Pierce, Fenner & Smith, Inc. v. Dabit,
547 U.S. 71 (2006) 45

Metro-Goldwyn-Mayer Studios, Inc. v. Grokster, Ltd.,
545 U.S. 913 (2005) 23

Mitchell v. Hawley,
83 U.S. (16 Wall.) 544 (1873) 17, 18, 19, 48

Motion Picture Patents Co. v. Universal Film Manufacturing Co.,
243 U.S. 502 (1917) ..... *passim*

Pennock v. Dialogue,
27 U.S. (2 Pet.) 1 (1829) 46

Quality King Distributors, Inc. v. L'Anza Research International, Inc.,
523 U.S. 135 (1998) 25

Seymour v. Osborne,
78 U.S. (11 Wall.) 516 (1870) 46

TABLE OF AUTHORITIES—Continued

Page(s)

Southard v. Russell,
57 U.S. (16 How.) 547 (1854) 20

Square D Co. v. Niagara Frontier Tariff Bureau, Inc.,
476 U.S. 409 (1986) 45

Step-Saver Data System, Inc. v. Wyse Technology,
939 F.2d 91 (3d Cir. 1991) 42

Storage Technical Corp. v. Custom Hardware Eng'g & Consulting, Inc.,
421 F.3d 1307 (Fed. Cir. 2005) 41

Straus v. Victor Talking Machine Co.,
243 U.S. 490 (1917) 19, 22

United States v. Dubilier Condenser Corp.,
289 U.S. 178 (1933) 45

United States v. General Electric Co.,
272 U.S. 476 (1926) 28, 29, 32, 36

United States v. Masonite Corp.,
316 U.S. 264 (1942) 46

United States v. Univis Lens Co.,
316 U.S. 241 (1942) ..... *passim*

United States v. Univis Lens Co.,
41 F. Supp. 258 (S.D.N.Y. 1941) 36

TABLE OF AUTHORITIES—Continued

Page(s)

United States ex rel. Steinmetz v. Allen, 192 U.S. 543 (1904) 37, 38

United States Gypsum Co. v. National Gypsum Co., 352 U.S. 457 (1957) 30

STATUTES

28 U.S.C. §1254(1) 1

35 U.S.C. §154(a)(1) 16

35 U.S.C. §261 46

35 U.S.C. §271(c) 34

BOOKS AND ARTICLES

3A Phillip E. Areeda & Herbert Hovenkamp, *Antitrust Law* (2d ed. 2002) 49

Robert H. Bork, *The Antitrust Paradox* (1978) 49

Julie E. Cohen & Mark A. Lemley, *Patent Scope and Innovation in the Software Industry*, 89 Cal. L. Rev. 1 (2001) 26, 28, 30, 42, 43

TABLE OF AUTHORITIES—Continued

Page(s)

Arthur J. Gajarsa et al., *How Much Fuel to Add to the Fire of Genius? Some Questions About the Repair/Reconstruction Distinction in Patent Law*, 48 Am. U. L. Rev. 1205 (1999).....15

Henry Hansmann & Reiner Kraakman, *Property, Contract, and Verification: The Numerus Clausus Problem and the Divisibility of Rights*, 31 J. Legal Stud. 373 (2002).....46

James B. Kobak, Jr., *Contracting Around Exhaustion: Some Thoughts About the CAFC's Mallinckrodt Decision*, 75 J. Pat. & Trademark Off. Soc'y 550 (1993).....12, 30, 46, 50

Thomas W. Merrill & Henry E. Smith, *Optimal Standardization in the Law of Property: The Numerus Clausus Principle*, 110 Yale L.J. 1 (2000).....19

Mark R. Patterson, *Contractual Expansion of the Scope of Patent Infringement Through Field-of-Use Licensing*, 49 Wm. & Mary L. Rev. 157 (2007).....*passim*

Richard A. Posner & Frank H. Easterbrook, *Antitrust Cases, Economic Notes, and Other Materials* (2d ed. 1981).....49

Restatement (Second) of Contracts §384 (1981).....43

TABLE OF AUTHORITIES—Continued

Page(s)

Edwin E. Richards, *Drafting Licenses to Guide Whether Potential Disputes Lie in Contract or Infringement*, 7 Comp. L. Rev. & Tech. J. 45 (2002) 43

Richard H. Stern, *The Unobserved Demise of the Exhaustion Doctrine in U.S. Patent Law: Mallinckrodt v. Medipart*, 15 Eur. Intell. Prop. Rev. 460 (1993) 13, 28, 31, 32

John R. Thomas, *Of Text, Technique, and the Tangible: Drafting Patent Claims Around Patent Rules*, 17 J. Marshall J. Computer & Info. L. 219 (1998) 37

OTHER AUTHORITY

Supreme Court Rule 15.2 6

United States Patent and Trademark Office, United States Department of Commerce, *Manual of Patent Examining Procedure* §806.05(e) (2006) 6, 37

Uniform Commercial Code §2-202 ..... 14, 42

Uniform Commercial Code §2-207 43
Uniform Commercial Code §2-207(1) 43
Uniform Commercial Code §2-207(2)(b) 43

Uniform Commercial Code §2-312 52

OPINIONS BELOW

The opinion of the Federal Circuit (Pet. App. 1a–25a) is reported at 453 F.3d 1364. Three opinions of the District Court are relevant. The first (Pet. App. 26a–51a) is unreported. The second (Pet. App. 52a–61a) is reported at 248 F. Supp. 2d 912. The third (Pet. App. 62a–81a) is unreported.

JURISDICTION

The Federal Circuit denied a petition for rehearing or rehearing *en banc* on September 1, 2006. Pet. App. 82a–83a. This Court has jurisdiction under 28 U.S.C. §1254(1).

STATUTORY PROVISIONS INVOLVED

The statutory appendix reproduces the relevant portions of the patent statutes.

STATEMENT OF THE CASE

This Court has held for more than a century that "in the essential nature of things, when the patentee, or the person having his rights, sells a machine or instrument whose sole value is in its use, he receives the consideration for its use and he parts with the right to restrict that use." *Adams v. Burke*, 84 U.S. (17 Wall.) 453, 456 (1873). That "patent exhaustion" doctrine is triggered by any authorized sale of the patented article, or by the authorized sale of any "uncompleted article which, because it embodies essential features of his patented invention, is within the protection of his patent [and is] destined ... to be finished by the purchaser in conformity to the patent." *United States v. Univis Lens Co.*, 316 U.S. 241, 250–51 (1942). After an authorized sale the patentee may enforce *contractual* promises it has obtained from the

purchaser by suing for breach, but "may not thereafter, by virtue of his patent, control the use or disposition of the article" by suing for *patent infringement*. *Id.* at 250.

Respondent LG Electronics, Inc. ("LGE") gave Intel Corporation ("Intel") authority to sell microprocessors and chipsets that embody essential features of LGE's patents, that were within the protection of those patents according to LGE's own contributory infringement allegations, and that were inevitably destined to be combined by purchasers with generic memory chips and busses to make the combinations that LGE contends infringe. The District Court found, and the Federal Circuit did not disagree, that Intel's microprocessors and chipsets have no other reasonable use. LGE nonetheless claims a right to sue Intel's customers—and their customers, and their customers, down through the chain all the way to end consumers—for patent infringement, based on the theory that it did not convey an express or implied "license" to Intel's purchasers.

That claim confuses the statutory limits of the patent grant, as defined by the exhaustion rule, with the separate doctrine of "implied license." The Federal Circuit has embraced precisely the reasoning that this Court briefly adopted in *Henry v. A.B. Dick Co.*, 224 U.S. 1 (1912), which proved to be such a serious error that it was overruled only five years later in *Motion Picture Patents Co. v. Universal Film Manufacturing Co.*, 243 U.S. 502 (1917). If LGE wants to restrict the use of sold articles after an authorized sale, it must secure contractual promises *and enforce them under contract law* like any ordinary seller.

Statement of Facts

The basic facts are undisputed. On May 3, 1999, LGE purchased a portfolio of U.S. and foreign patents and patent applications. A4701.028; A4701.071–4701.079.[1] LGE contends in this case that every computer that contains Intel chips infringes three of these patents.[2] LGE also contends that computers containing *non-Intel* chips infringe, but those computers are not at issue here. Pet. App. 30a n.2.

Petitioners (together "Quanta") purchase microprocessors and chipsets from Intel and incorporate them into computers and file servers in exact conformance with Intel's specifications. Pet. App. 39a. The computers Quanta makes are then sold in the U.S. and around the world to companies such as Dell, HP, IBM, and Gateway. Quanta in no way modifies the chips after purchasing them. Quanta has no choice but to follow Intel's specifications because it has no way of knowing the specifics of the chips' internal designs, which Intel protects as trade secrets. A3706 ¶4; Dckt #448(4:3-5). As the District Court found, "[t]he failure to follow Intel's design specification would render [Petitioner's] computers

---

[1] The confidential financial details of that purchase, and of LGE's subsequent cross-license with Intel, appear in the unredacted petition.

Citations to "A" refer to the Joint Appendix before the Federal Circuit, "Dckt" to the District Court record in case 4:01-cv-02187-CW, "Pet. App." to the Petition Appendix, and "JA" to the Joint Appendix before this Court.

[2] A3633–35; A3671–78; A3683–86; A3690–3702; *see also* Dckt #448(2:21–3:1) (LGE's allegations are directed at 146 products, each of which incorporates an Intel chipset, and the chipsets satisfy elements of LGE's asserted claims).

inoperable." Pet. App. 46a.

1. The patents and LGE's infringement claims

LGE claims that, by merely combining Intel's licensed chips with generic computer components (such as memory), Quanta's computers infringe three of LGE's patents, U.S. Patent Nos. 4,939,641 (the "'641 patent"), 5,077,733 (the "'733 patent"), and 5,379,379 (the "'379 patent"). A3679; Dckt #145 Ex. G (14), Ex. H (22). Understanding the relationship between the patented inventions and the products LGE licensed Intel to sell requires a brief review of the claims.

The asserted claims of the '641 patent describe a protocol to ensure memory coherency between a system's main memory and its cache memory. JA211(1:53–55), JA212(3:28–34). Cache memory is a high speed memory often closely associated with a computer system's microprocessor. Each of the Quanta products that LGE alleges infringes its patents uses an Intel microprocessor that includes cache memory "on chip." A3671, A3676. Memory coherency between a system's main memory and its cache memory is important because both the cache memory and the main memory may have data associated with the same memory address. JA211(1:31–35). When a device or component of a computer system requests data stored at a specific memory address, the '641 patent discloses a system in which a "cache memory" monitors the system bus[3] for read responses returning from main memory. JA214(7:17–20, 26–36). If the data

---

[3] A bus is simply a set of wires that connects the various components of a system and over which data, commands and addresses travel.

in the main memory is "stale" (i.e., the cache memory has data associated with a memory address that was more up to date), the cache memory will retransmit the up to date data to the requesting device. JA210(Fig. 10C), JA216(12:59–65). LGE's main allegations are that Quanta's products infringe claims 1 and 14 of the '641 patent. A3671–77; Dckt #1078(2:7-8). Claim 1 of the '641 patent is directed to a "central processing unit," which comprises a cache memory and which operates in the manner described above. A3671–72. Claim 14 is directed to the cache memory itself. A3676–77.

The '733 patent discloses a rotating priority system that permits computer components to alternate access to a "system bus." JA231(1:19–27). This priority or "arbitration" system acts as a traffic cop for components competing for access to a bus. JA231(1:19–27). LGE alleges that certain "chipsets" in Quanta's products are responsible for bus arbitration. A3683, A3686. Intel manufactures the chipsets used in most of Quanta's products.

The '379 patent, like the '641 patent, claims a system and method for ensuring that "stale" data is not retrieved from memory. JA255(1:23–33). The apparatus claims of the '379 patent are directed to a "memory control unit." A3690–93.[4] The '379's method claims are directed to the operation of the memory control unit.[5] A3694–97. LGE alleges that the

---

[4] Claims 22 and 23 are no longer at issue. Dckt #1052 Ex. A (Tab 4).

[5] Quanta has consistently argued that the method claims in LGE's patents-at-issue merely cover the ordinary use of the device claimed in the apparatus claims of the same patents. Dckt

"memory control unit" in Quanta's products is a "chipset." A3690; Dckt #145 Ex. G (14), Ex. H (22). Intel supplies the chipsets in Quanta's accused computers. Pet. App. 2a. The invention disclosed in the '379 patent prevents the return of stale data from system memory by comparing the address of each read request coming into the memory control unit to see if it matches an address of a write request already buffered (or stored) in the memory control unit. If there is a match, the write request is executed first, so that what is read from memory is the most current data. Pet. App. 21a.

There is no genuine dispute that Intel's microprocessors and chipsets "embod[y] essential features of" each of LGE's combination or method patents. *Univis*, 316 U.S. at 250–51. The petition plainly asserted that "the chips sold by Intel clearly embraced the 'essential features' of the asserted patents, which LGE contends are infringed merely by combining the chips with generic components such as memory." Pet. 18. LGE did not dispute that characterization in its opposition or supplemental filing, and hence has waived the right to do so. S. Ct. R. 15.2. That concession is plainly correct. All of the disputed patents relate to ways that Intel products use or communicate with generic computer components such as memory or busses, and the inventive aspects of the patented methods or combinations (such as bus

---

#360(5–10); Appellee Br. 32–36. LGE has never disputed this characterization. Under Patent and Trademark Office practice, a single patent can contain both method and apparatus claims only if those claims are directed to the same invention. *See* U.S. PTO, U.S. Dep't of Commerce, *Manual of Patent Examining Procedure* §806.05(e) (2006).

arbitration or ensuring consistency between cache and main memory) are executed within Intel's products. A3679; Dckt #145 Ex. G (14), Ex. H (22). The District Court found that LGE's infringement allegations "identify[] Intel chipsets as integral to [LGE's] infringement claims." Pet. App. 34a; *see also* Pet. App. 46a ("LGE claims that by incorporating the Intel microprocessors and chipsets into their computers in accordance with Intel's design specifications, Defendants infringe five of LGE's patents."). And throughout the course of a lengthy discovery dispute with Intel, LGE repeatedly assured the court that Intel's products "indisputably comprise key aspects of LGE's infringement contentions." Dckt #448(18:5); *see also* Dckt #951(15:19–20) (Intel's "products indisputably comprise key aspects of LGE's infringement contentions because they satisfy numerous claim limitations.").

If LGE's broad infringement allegations are accepted, Intel's microprocessors and chipsets are also "within the protection of [LGE's] patent[s]," and are "destined ... to be finished by the purchaser in conformity to the patent." *Univis*, 316 U.S. at 250–51. LGE contends that Intel contributorily infringes its combination and method patents, and negotiated a licensing agreement with Intel on that basis. *E.g.*, JA143. And the District Court made a finding—undisturbed by the Federal Circuit—that Intel's microprocessors and chipsets have no reasonable use except to be combined into the various combinations that LGE claims are covered by its apparatus patents, or used in the ways that LGE claims are covered by its method patents. *See* Pet. App. 46a ("such use is the sole contemplated use for the devices"); Pet. App. 49a

("The microprocessors and chipsets at issue here cannot be disassembled and they cannot be used to carry out a non-patented function.").

2. The LGE-Intel license

Under pressure from LGE's infringement claims, on September 7, 2000 Intel agreed to a confidential cross-licensing deal that included the right to "make, use, sell (directly or indirectly), offer to sell, import or otherwise dispose of" its own products free from LGE's patent claims. JA145–173(§3.2(a)). The "make, use, [and] sell" phrasing is a term of art in patent law, which encompasses the entire scope of the exclusionary rights granted to a patent owner. Accordingly, the District Court found that LGE's license to Intel was "unrestricted." Pet. App. 33a.

The Patent License Agreement contains a proviso that no license "is granted by either party hereto ... to any third party for the combination by a third party of Licensed Products of either party with items, components, or the like acquired ... from sources other than a party hereto, or for the use, import, offer for sale or sale of such combination." JA164(¶3.8). The next sentence provides, however, that "[n]otwithstanding anything to the contrary contained in this Agreement, the parties agree that nothing herein shall in any way limit or alter the effect of patent exhaustion that would otherwise apply when a party hereto sells any of its Licensed Products." JA164(¶3.8).

In a separate Master Agreement, not referenced in the Patent License Agreement, Intel agreed to send a "notice" to its own customers, purporting to inform them that they did not receive any "license" from LGE

to use products purchased from Intel in any product made "by combining an Intel product with any non-Intel product." JA198. That agreement also provides that "a breach of this Agreement shall have no effect on and shall not be grounds for termination of the Patent License." JA176(¶1).

3. Intel's sales to Quanta

Quanta purchases an ongoing stream of microprocessors and chipsets from Intel. Pursuant to its agreement with LGE, and *after* many of the sales at issue here had already occurred, Intel sent the demanded "notice" letter to Quanta. Pet. App. 60a; JA143–44. The record does not reveal Quanta's response to that notice, but there is no evidence that Quanta made any promise to Intel that it would limit or restrict its use of Intel's chips. The District Court found that "[Quanta's] purchase of the microprocessors and chipsets from Intel was unconditional, in that [Quanta's] purchase ... was in no way conditioned on [its] agreement not to combine the Intel microprocessors and chipsets with other non-Intel parts and then sell the resultant products." Pet. App. 58a. LGE's complaint does not include a breach of contract claim.

Although Quanta has been arguing for years that LGE's infringement claims are barred by exhaustion because Intel's sales to Quanta were authorized, LGE also has never contended that *Intel* breached any contractual or license obligations owed to LGE.

Proceedings Below

Between late 2000 and Spring 2001, LGE brought separate infringement suits against Quanta and several

other companies (which have since settled). The District Court consolidated the cases for pretrial purposes. Five of the original patents at issue (U.S. Patent Nos. 4,918,645, 4,939,641, 5,077,733, 5,379,379 and 4,926,419) relate to technology allegedly used in microprocessors and memory controllers made by Intel and its competitors.[6] LGE dropped its allegations with respect to U.S. Patent Nos. '419 and '645, leaving three patents at issue: the '733, '641, and '379 patents.

The District Court granted Quanta's motion for partial summary judgment on the ground that Intel's authorized sale of chips exhausted LGE's patent rights. Pet. App. 32a–45a. The District Court found as a fact that, if LGE's broad infringement contentions were correct, there could be no reasonable use of Intel's chips that did not infringe LGE's patents. Pet. App. 45a–49a. It also found that Quanta had "purchased essential components of LGE's patented devices from a licensed source of those components." Pet. App. 59a. Relying on *Univis*, it held that LGE's patent rights had been exhausted and that LGE was improperly attempting to obtain a double royalty. Pet. App. 50a, 40a, 32a.

On reconsideration, the District Court upheld its finding of exhaustion with respect to LGE's apparatus claims but held that the *method* claims in those same patents were not exhausted—even though they essentially covered the mere use of the device claimed in the exhausted apparatus claims. Pet. App. 57a–61a. It concluded that method claims could never be exhausted, relying on language from two Federal

---

[6] U.S. Patent No. 5,892,509 was never relevant to exhaustion, and LGE has dismissed its claims based on that patent.

Circuit decisions, *Bandag, Inc. v. Al Bolser's Tire Stores, Inc.*, 750 F.2d 903, 924 (Fed. Cir. 1984), and *Glass Equipment Development, Inc. v. Besten, Inc.*, 174 F.3d 1337, 1341 n.1 (Fed. Cir. 1999). Pet. App. 60a.

Quanta subsequently moved for summary judgment of non-infringement. The District Court granted Quanta's motion and entered final judgment against LGE in January 2005. A0109–0114. LGE appealed to the Federal Circuit. Quanta cross-appealed on several grounds, including the holding that LGE's method claims were not exhausted.

The Federal Circuit reversed. It held that the patent exhaustion doctrine applies only to "unconditional" sales, and that these sales were "conditional" because LGE did not intend to convey any "license" to purchasers. Pet. App. 5a–6a. The Federal Circuit implied that Quanta had somehow agreed to such a "condition" under the U.C.C. Pet. App. 6a. It also held that, even if the sales in question were not "conditional," "the sale of a device does not exhaust a patentee's rights in its method claims." Pet. App. 6a.

SUMMARY OF THE ARGUMENT

"[W]here one has sold an uncompleted article which, because it embodies essential features of his patented invention, is within the protection of his patent, and has destined the article to be finished by the purchaser in conformity to the patent," the patentee "has sold his invention so far as it is or may be embodied in that particular article." *Univis*, 316 U.S. at 250–51. If LGE's broad infringement allegations are accepted, the microprocessors and chipsets that LGE authorized Intel to sell plainly embody essential

features of LGE's patents, were within the protection of those patents, and were inevitably destined to be combined by purchasers with generic memory and busses in the manner that LGE now contends is infringing. The District Court correctly found that these products have no other reasonable use. Under long-settled precedents of this Court, therefore, LGE's patent rights are exhausted. LGE's "monopoly remains so long as [it] retains the ownership of the patented article. But sale of it exhausts the monopoly in that article and the patentee may not thereafter, by virtue of his patent, control the use or disposition of the article." *Id.* at 250.

LGE claims that the "notice" letter it had Intel send to Quanta preserved its ability to sue for infringement, by specifying that Intel's sales would not have the statutory consequence (exhaustion) that this Court has always held an authorized sale will have. The Federal Circuit agreed, holding that exhaustion is triggered only by "unconditional" sales, and that these sales were "conditional" because LGE did not intend to convey an "implied license" to Quanta. In prior cases the Federal Circuit has clarified that it believes such "conditions" are enforceable so long as they do not "venture[] beyond the patent grant and into behavior having an anticompetitive effect not justifiable under the rule of reason." *Mallinckrodt, Inc. v. Medipart, Inc.*, 976 F.2d 700, 708 (Fed. Cir. 1992).

That reasoning is a jumble of mismatched principles. The Federal Circuit has "creat[ed] a confusing *melange* in which exhaustion, misuse and antitrust principles are all conflated although all have somewhat different origins and purposes." James B. Kobak, Jr., *Contracting Around Exhaustion: Some*

Thoughts About the CAFC's Mallinckrodt Decision, 75 J. Pat. & Trademark Off. Soc'y 550, 554 (1993). Patent licenses can indeed carry conditions, and breach of those conditions can justify an infringement suit, but that is only because a license is needed to immunize conduct that would otherwise be infringement. Quanta does not need a license (express or implied) because LGE's patent rights have been exhausted. That is not a question of what LGE intended, but of the statutory scope of the patent grant. In traditional terms, *no* restriction after an authorized sale is "reasonably within the patent grant." And nothing about these principles turns on whether a post-sale restriction is *anticompetitive*. The point of the exhaustion doctrine is that "[b]y a valid sale and purchase the patented machine becomes the private individual property of the purchaser," and "is no longer specially protected by the laws of the United States." *Bloomer v. Millinger*, 68 U.S. (1 Wall.) 340, 351 (1864).

This Court has repeatedly invalidated attempts by patentees to reserve or extend their statutory rights after an authorized sale. "Until the Federal Circuit's *Mallinckrodt* decision, an unbroken line of Supreme Court and lower court precedents held that the patentee's patent right over a product that the patentee sold (or that a licensee authorised to make a sale sold) ended at the point of sale." Richard H. Stern, *The Unobserved Demise of the Exhaustion Doctrine in U.S. Patent Law: Mallinckrodt v. Medipart*, 15 Eur. Intell. Prop. Rev. 460, 461 (1993). "Accordingly, a customer did not commit patent infringement by disobeying a notice, contract, or other 'remote control' limitation that the patentee sought to impose on the use of goods that it had sold to the customer." *Id.* In

Motion Picture Patents, for example, this Court held that a patent owner could not enforce a notice telling the purchaser that additional royalties would be owed at a later date and that the machine could only be used with the patentee's supplies. 243 U.S. at 518. *Univis* held that resale price restrictions in "license" agreements signed by purchasers were purely contractual and "derive[d] no support from the patent" because the sale exhausted the patentee's statutory rights. 316 U.S. at 251. To our knowledge the *only* case in which this Court has ever permitted a patent owner to sell goods while reserving the statutory right to sue for infringement if certain conditions are not met is *A.B. Dick*, which embraced a conflation of exhaustion and "implied license" identical to what the Federal Circuit has done here. *A.B. Dick* was overruled by this Court 90 years ago.

Like any ordinary seller of goods, LGE may insist that purchasers sign contracts agreeing that they will make future payments to LGE, or use or resell the purchased goods only in certain ways. Such contracts would be enforceable, or not, under the ordinary rules of contract and antitrust law. The Federal Circuit's half-hearted ("*cf.*") suggestion that a contract might have been formed here under U.C.C. §2-202 is both wrong and irrelevant—since that would at most entitle LGE to sue for *breach*, not *infringement*. What LGE wants (and the Federal Circuit has authorized) here is a rule of property, not contract, allowing patentees to impose servitudes or restraints on alienation running with chattels and enforceable with the full weight of patent law. Ordinary sellers of goods have no such powers, and Judge Gajarsa has correctly warned that these cases illustrate a "conceptual collapse of contract

law and property law." Arthur J. Gajarsa et al., *How Much Fuel to Add to the Fire of Genius? Some Questions About the Repair/Reconstruction Distinction in Patent Law*, 48 Am. U. L. Rev. 1205, 1229–30 (1999) (capitalization altered).

If there were any reason to change the traditional rule, then the impetus should come from Congress—which has legislated against the backdrop of this Court's exhaustion precedents for 150 years without expressing any discontent. Regardless, the exhaustion principle makes sound economic and policy sense. That rule minimizes transaction costs by forcing the patent owner to exact the full value of its patent rights in one negotiation with the first purchaser, which can then share the burden with the rest of the distribution chain by charging a higher price. Exhaustion also allows purchasers to trust that they have the right to use purchased goods, at least for their only reasonable use. It "does not deprive a patentee of his just rights, because no article can be unfettered from the claim of his monopoly without paying its tribute." *Keeler v. Standard Folding Bed Co.*, 157 U.S. 659, 666–67 (1895). And "[t]he inconvenience and annoyance to the public that an opposite conclusion would occasion are too obvious to require illustration." *Id.* at 667.

ARGUMENT

I. AN AUTHORIZED SALE OF A PRODUCT THAT EMBODIES ESSENTIAL FEATURES OF THE PATENT AND HAS NO REASONABLE NON-INFRINGING USE EXHAUSTS THE PATENT

This Court's exhaustion cases recognize important but subtle distinctions—between sales and "licenses,"

between authorized and unauthorized sales, and between patent and contract law—that the Federal Circuit has now abandoned or conflated.

A. An Authorized Sale Exhausts A Patentee's Statutory Rights

Patent law grants the patentee the "right to exclude others from making, using, offering for sale, or selling the invention." 35 U.S.C. §154(a)(1). But when a patented invention "passes to the hands of the purchaser," it "passes outside" the scope of the patentee's rights and is no longer governed by patent law. *Bloomer v. McQuewan*, 55 U.S. (14 How.) 539, 549 (1853). That interpretation of the statutory scope of the patent grant derived from background property law rules, as well as the principle that "[p]atentees ... are entitled to but one royalty for a patented machine." *Millinger*, 68 U.S. at 350. Therefore "when a patentee has ... authorized another to construct and sell it ... and the consideration has been paid to him for the right, he has then to that extent parted with his monopoly, and ceased to have any interest whatever in the machine so sold ...." *Id.*

In the leading early exhaustion case, *Adams*, the owner of a patent on coffin lids granted exclusive territories to various dealers. When an undertaker purchased coffin lids in one territory and used them in another, the patentee sued for infringement. This Court held that:

> in the essential nature of things, when the patentee, or the person having his rights, sells a machine or instrument whose sole value is in its use, he receives the consideration for its use and he parts with the right to restrict that use. The

> article, in the language of the court, passes without the limit of the monopoly.

84 U.S. at 456 (footnote omitted).

In *Keeler*, this Court considered an exclusive territories case similar to *Adams*, but the licensee *knew* that the purchaser intended to use the goods outside of his territory. This Court held that the seller's knowledge was irrelevant, and that "the payment of a royalty once, or, what is the same thing, the purchase of the article from one authorized by the patentee to sell it, emancipates such article from any further subjection to the patent throughout the entire life of the patent." 157 U.S. at 666. This Court held that "one who buys patented articles of manufacture from one authorized to sell them becomes possessed of an absolute property in such articles, unrestricted in time or place." *Id.* It noted that "[w]hether a patentee may protect himself and his assignees by special contracts brought home to the purchasers is not a question before us, and upon which we express no opinion." *Id.* But this Court emphasized that "[i]t is, however, obvious that such a question would arise as a question of contract, and not as one under the inherent meaning and effect of the patent laws." *Id.*

The Federal Circuit's error in this case has its roots in a misunderstanding of *Mitchell v. Hawley*, 83 U.S. (16 Wall.) 544 (1873), which was decided the same year as *Adams*. The patentee granted a licensee "the exclusive right to make and use 'and to license to others the right to use the said machines'" in Massachusetts and New Hampshire for the original term of the patent. *Id.* at 548–49. But the license also provided that the licensee had no authority to "'dispose

of, sell, or grant any license to use the said machines beyond the expiration' of the original term." *Id.* at 549. The licensee nonetheless sold the machines and the patentee sued the purchasers for infringement after the term of the patent was extended.

Consistent with *Adams*, this Court noted that sold goods "become the private individual property of the purchasers, and are no longer specifically protected by the patent laws." *Id.* at 548. But this Court permitted the infringement suit to proceed because the seller "was only a licensee and never had any power to sell a machine so as to withdraw it indefinitely from the operation of the franchise secured by the patent." *Id.* at 551. "Notice to the purchaser in such a case is not required, as the law imposes the risk upon the purchaser, as against the real owner, whether the title of the seller is such that he can make a valid conveyance." *Id.* at 550. The holding of *Mitchell* is that the licensee had no authority to sell, and the authorized transfer of title that triggers exhaustion did not occur.

In several passages that spawned later confusion, however, this Court explained that sales "may be made by the patentee with or without conditions, as in other cases, but where the sale is absolute, and without any conditions, the rule is well settled that the purchaser may continue to use" the article "until it is worn out, or he may repair it or improve upon it as he pleases, in same manner as if dealing with property of any other kind." *Id.* at 548. The Federal Circuit has now seized on that language to hold that patent owners can impose "conditions" on the use of sold goods and enforce them with infringement suits. But that misunderstands this Court's point.

Mitchell emphasized that patentees can engage in "conditional sales" only in the "same manner as if dealing with property of any other kind." *Id.* at 548. This Court's cases of that era recognized that as a matter of property law "restraints upon ... alienation" after a valid sale "have been hateful to the law from Lord Coke's day to ours, because obnoxious to the public interest." *Straus v. Victor Talking Mach. Co.*, 243 U.S. 490, 501 (1917). Ordinary sellers of property generally *are not* entitled to impose use-restricting servitudes that run with the sold good (although they might, as noted in *Keeler*, negotiate a *contractual* use restriction with the purchaser). *See generally John D. Park & Sons Co. v. Hartman*, 153 Fed. 24, 39 (6th Cir. 1907) (such restraints "offend against the ordinary and usual freedom of traffic in chattels or articles which pass by mere delivery"); Thomas W. Merrill & Henry E. Smith, *Optimal Standardization in the Law of Property: The Numerus Clausus Principle*, 110 Yale L.J. 1, 18 & n.68 (2000) (noting that "American precedent is largely, if not quite exclusively, in accord" with the proposition that "one cannot create servitudes in personal property").

At the time *Mitchell* was decided a "conditional sale" was an "*agreement* to sell," in which a party does not convey title to the buyer until performance of a condition precedent.[7] Such transactions were more

---

[7] *See, e.g., Harkness v. Russell*, 118 U.S. 663, 666 (1886) (a conditional sale is "a mere agreement to sell upon a condition, to be performed"); *Fosdick v. Schall*, 99 U.S. (9 Otto) 235, 250-51 (1879) (a conditional sale is one "'with a right of rescission on the part of the vendor, in case the purchaser shall fail in payment of his installments'" (citation omitted)). Title vests, and the sale becomes "absolute," only upon the occurrence of a condition

common before the modern law of secured transactions, and they did not trigger exhaustion until the condition was performed and title transferred. But that principle does not permit sellers to impose conditions *subsequent* to the transfer of title, and enforce those conditions in a suit for conversion or trespass to chattels if the purchaser violates them.

This Court did briefly permit enforceable conditions subsequent under the patent laws. In *A.B. Dick* in 1912, the patentee sold a mimeograph machine stamped: "This machine is sold by the A.B. Dick Co. with the license restriction that it may be used only with the stencil paper, ink, and other supplies made by A.B. Dick Company, Chicago, U.S.A." 224 U.S. at 11. A supplier who sold ink to a purchaser was sued for contributory infringement, and defended by arguing that the restriction was invalid on exhaustion grounds or at most enforceable only in an action for breach of contract. This Court rejected those arguments, and in the process recast the entire exhaustion doctrine as a

---

precedent. *See, e.g., Conway's Ex'rs & Devisees v. Alexander*, 11 U.S. (7 Cranch) 218, 240–41 (1812) (conveyance of a deed with an option to repurchase was a conditional sale, which became absolute once the option period expired); *Southard v. Russell*, 57 U.S. (16 How.) 547, 566 (1854) (transaction could either be "a conditional sale to become absolute on the failure to refund the purchase-money within the time, or a security for the loan of money"); *Albright v. Teas*, 106 U.S. 613, 617 (1883) (party could not sue for patent infringement because he had sold "all his title and interest in the inventions covered by his patents" making "[t]he transfer ... absolute and unconditional"); *Bailey v. Baker Ice Mach. Co.*, 239 U.S. 268, 271 (1915) (in a conditional sale the vendor remains the owner, subject to the vendee's right to acquire the title by complying with the stipulated condition, while in an absolute sale, the vendee immediately becomes the owner, subject to any lien created by the mortgagee).

waivable *implied license* to use the product. "If sold unreservedly the right to the entire use of the invention passes, because that is the implied intent; but this right to use is nothing more nor less than an unrestricted license presumed from an unconditional sale." *Id.* at 24. But, this Court reasoned, "if the right of use be confined by specific restriction, the use not permitted is necessarily reserved to the patentee," and "[i]f that reserved control of use of the machine be violated, the patent is thereby invaded." *Id.* at 24–25. This Court viewed the tying restriction in *A.B. Dick* as a legitimate adjunct to the patentee's strategy for capitalizing on his patent, which was to sell the machines at cost and make money on the ink. *Id.* at 32.

The *A.B. Dick* rule was short-lived. The next year, in *Bauer & Cie v. O'Donnell*, 229 U.S. 1, 8 (1913), this Court held that a "notice" to purchasers stating that the sold product "is licensed by us for [re]sale and use at a price not less than one dollar" could not be enforced against retailers selling the product for less. This Court noted that it had refused to enforce similar notices under the copyright statute, on the ground that an authorized first sale exhausts the copyright, *see Bobbs-Merrill Co. v. Straus*, 210 U.S. 339, 350–51 (1908), and reasoned that "there is a strong similarity between and identity of purpose in the two statutes" in their implementation of the exclusive right to *sell* the patented or copyrighted good. *Bauer*, 229 U.S. at 12–13. This Court distinguished *A.B. Dick* as involving a limited conveyance of the patentee's exclusive right to *use*, which has no equivalent in the copyright statute. *Id.* at 13–15. It also dismissed as a "mere play upon words" and "perversion of terms" the patent owner's attempt to cast the restriction in *Bauer* as a limitation

on *use* as opposed to *resale*. *Id.* at 16; *see also Victor Talking Mach.*, 243 U.S. at 498 (use notice was "a disguised attempt to control the prices of its machines after they have been sold and paid for").

A.B. Dick was conclusively overruled in 1917 in *Motion Picture Patents*, in which a notice purported to restrict movie projectors to use only with film leased from the patent owner, and subject to "'other terms to be fixed by the [patent owner] ... (which other terms shall only be the payment of a royalty or rental ...).'" 243 U.S. at 506 (emphasis omitted). This Court stated that the issue, "which is arising with increasing frequency in recent years" was "the extent to which a patentee or his assignee is authorized ... to prescribe by notice attached to a patented machine the conditions of its use ..., under pain of infringement of the patent." *Id.* at 509. This Court noted that *A.B. Dick* had "led to an immediate and widespread adoption" of use restrictions, which had evolved in this case into "[t]he perfect instrument of favoritism and oppression." *Id.* at 515. It read *Bauer* to hold that "the right to vend is exhausted by a single, unconditional sale, the article sold being thereby carried outside the monopoly of the patent law and rendered free of every restriction which the vendor may attempt to put on it." *Id.* at 516. Obviously that sentence would make no sense if such attempted restrictions themselves prevented a sale from being "unconditional." As Justice Holmes's dissent clarified, a "conditional" sale is one "retaining the title until a future event after delivery." *Id.* at 520–21 (Holmes, J., dissenting) (citing *Bailey*, 239 U.S. at 272); *see supra* pp. 19–20 n.7.

The *Motion Picture Patents* Court abandoned *Bauer*'s attempt to distinguish *A.B. Dick* from the

copyright precedents on the ground that "use" rights differ somehow from "vend" rights. "The statutory authority to grant the exclusive right to 'use' a patented machine is not greater, indeed it is precisely the same, as the authority to grant the exclusive right to 'vend'" the patented article. 243 U.S. at 516. As in *Bauer*, this Court analogized to copyright principles when reasoning that a good, after being "sold and paid for," could no longer be subject "to any restrictions or conditions as to use or royalty which the company which authorized its sale may see fit, after the sale, from time to time to impose." *Id.* at 515. This Court held that the notice was invalid, and that *A.B. Dick* was expressly overruled. *Id.* at 518.[8] It also endorsed *Keeler*'s reasoning that "[t]he extent to which the use of the patented machine may validly be restricted to specific supplies or otherwise by special contract between the owner of a patent and the purchaser or licensee is a question outside the patent law," and that any such right "must be derived from the general [contract law] and not from the patent law." *Id.* at 509 (citing *Keeler*).

This Court's last significant pronouncement on exhaustion is *Univis*. Univis Lens owned several

---

[8] This Court has cited *A.B. Dick* a handful of times for principles inapplicable to this case, such as federal patent jurisdiction and contributory infringement. *See, e.g., Christianson v. Colt Indus. Operating Corp.*, 486 U.S. 800, 808 (1988); *Metro-Goldwyn-Mayer Studios, Inc. v. Grokster, Ltd.*, 545 U.S. 913, 932–33, 935 (2005); *id.* at 943 (Ginsburg, J., concurring). It has consistently recognized that *A.B. Dick*'s patent exhaustion holding has been overruled. *E.g., Dawson Chem. Co. v. Rohm & Haas Co.*, 448 U.S. 176, 191–92 (1980); *Metro-Goldwyn-Mayer*, 545 U.S. at 932, 943.

patents for making eyeglass lenses. It produced lens blanks, and sold them for 50¢ each to three categories of licensees. 316 U.S. at 243–45. Wholesalers ground the lenses and resold them to prescription retailers. Finishing retailers ground their own lenses, mounted them in glasses, and sold directly to consumers. Prescription retailers purchased ground lenses from wholesalers, mounted them into glasses, and sold them to consumers. Univis Lens had license agreements with all three groups that restricted to whom, and for how much, they could sell the processed blanks. When it was sued under the antitrust laws, Univis Lens argued that the resale price restrictions were immune from antitrust scrutiny because they were contained in a valid patent license. This Court held that the price restrictions in the licenses "derive[d] no support from the patent" because the patent owner's rights had been exhausted. *Id.* at 251.

This Court emphasized that "where the sale of the blank is by the patentee or his licensee ... to a finisher, the only use to which it could be put and the only object of the sale is to enable the latter to grind and polish it for use as a lens by the prospective wearer." *Id.* at 249. It explained that "upon familiar principles the authorized sale of an article which is capable of use only in practicing the patent is a relinquishment of the patent monopoly with respect to the article sold," *id.*, and that "sale of it exhausts the monopoly in that article and the patentee may not thereafter, by virtue of his patent, control the use or disposition of the article," *id.* at 250. "[W]here one has sold an uncompleted article which, because it embodies essential features of his patented invention, is within the protection of his patent, and has destined the

article to be finished by the purchaser in conformity to the patent," this Court reasoned, "he has sold his invention so far as it is or may be embodied in that particular article." *Id.* at 250–51.

This Court recently and unanimously reaffirmed the analogous "first sale" copyright doctrine discussed in *Bauer* and *Motion Picture Patents*. *See Quality King Distribs., Inc. v. L'Anza Research Int'l, Inc.* 523 U.S. 135 (1998). Once a lawful sale has occurred, even "unauthorized resales" do not constitute "an infringement of [the copyright owner's] exclusive right to distribute." *Id.* at 143. This Court explained that "[t]he whole point of the first sale doctrine is that once the copyright owner places a copyrighted item in the stream of commerce by selling it, he has exhausted his exclusive statutory right to control its distribution." *Id.* at 152. Just as with patent exhaustion, the first sale doctrine is based upon "the critical distinction between statutory rights and contract rights." *Id.* at 143.

B. Exhaustion Is Not An "Implied License" That Can Be Repudiated By The Patentee

Under the separate doctrine of "implied license," "when a seller sells a product without restriction, it in effect promises the purchaser that in exchange for the price paid, it will not interfere with the purchaser's full enjoyment of the product purchased." *Hewlett-Packard Co. v. Repeat-O-Type Stencil Mfg. Corp.*, 123 F.3d 1445, 1451 (Fed. Cir. 1997), *cert. denied*, 523 U.S. 1022 (1998). "The buyer has an implied license under any patents of the seller that dominate the product or any uses of the product to which the parties might reasonably contemplate the product will be put." *Id.* Implied license thus grants broader rights than

exhaustion, but can be disclaimed or limited. Courts have "frequently conflated the two doctrines," but "while patent exhaustion stems from inherent limits on the grant of the patent right, implied license is a doctrine of quasi-contract, and depends on the beliefs and expectations of the parties to the sales transaction." Julie E. Cohen & Mark A. Lemley, *Patent Scope and Innovation in the Software Industry*, 89 Cal. L. Rev. 1, 31–32 (2001).

In *A.B. Dick*, this Court briefly embraced the idea that exhaustion was "nothing more nor less than an unrestricted license presumed from an unconditional sale." 224 U.S. at 24. But this Court rejected that entirely contractual view of the exhaustion doctrine in *Motion Picture Patents*. And although this Court has used "implied license" language in some subsequent cases, a careful look at the holdings makes clear this Court did not intend to revive *A.B. Dick*.

It was perfectly clear in *Univis*, for example, that the patentee intended to restrict its purchasers' use or resale, and that the purchasers had expressly agreed to those restrictions. 316 U.S. at 244–45 (discussing restrictions). If exhaustion were merely a license implied in fact from a sale that could be limited or conditioned by contract, this Court would not have viewed the restrictions in *Univis* as an illegitimate attempt to extend the statutory monopoly—and would have reached the opposite result in that case.

Then, in the 1960s, this Court decided a pair of cases holding that purchasers from an authorized seller have an inherent right to repair patented goods. *Aro Mfg. Co. v. Convertible Top Replacement Co.*, 365 U.S. 336 (1961) ("*Aro I*"); *Aro Mfg. Co. v. Convertible Top*

Replacement Co., 377 U.S. 476 (1964) ("*Aro II*"). In *Aro II*, this Court did state that the "sale of a patented article by the patentee or under his authority carries with it an 'implied license to use.'" 377 U.S. at 484 (citing *Adams*, 84 U.S. at 456; *Univis*, 316 U.S. at 259, 250–51). But nothing in *Aro I* or *Aro II* suggests that this Court intended to bring back *A.B. Dick*'s optional version of the exhaustion doctrine. Indeed, the patentee in *Aro II* tried to restrict purchasers' right of use and repair, and this Court held those restrictions invalid under the "long line of this Court's decisions delimiting the scope of the patent grant," reiterating that after sale of an article "the patentee cannot thereafter restrict [its] use by imposing a condition that replacement parts may be purchased only from a licensed supplier." *Id.* at 497 (plurality opinion). This Court also explained in *Aro I* that a patentee "'cannot prevent those to whom he sells from ... reconditioning articles worn by use unless they in fact make a new article.'" 365 U.S. at 343 (alteration in original). To the extent *Aro II* suggests that exhaustion may be conceived of as an "implied license," the license in question is clearly implied *in law*, and cannot be disclaimed.[9] Reading the "implied license" reference any other way would allow a patentee to "eliminate the right of repair by contract," which is inconsistent with the whole point of *Aro I* and *II*. Mark R. Patterson,

---

[9] *See Dawson*, 448 U.S. at 186 (citing *Univis* and *Adams* for concession that purchaser of unpatented product can practice method patent "by virtue of an 'implied license' they obtained[ed] when [the patentee] relinquished its monopoly by selling" the product); *id.* at 184 (referring to same facts as "'implied' licenses conferred by operation of law"); *Leitch Mfg. v. Barber Co.*, 302 U.S. 458, 461 (1938) (upon purchase of product "law implies authority to practice invention").

Contractual Expansion of the Scope of Patent Infringement Through Field-of-Use Licensing, 49 Wm. & Mary L. Rev. 157, 195–97 (2007); *see also* Stern, *supra*, at 465.

The Federal Circuit's suggestion that "the exhaustion doctrine is *merely* an implied license that can be eliminated by the patentee ... finds no support in *Univis* or in any other Supreme Court decision." Patterson, *supra*, at 203. It "could signal the death of the exhaustion doctrine, at least in any case where the patentee is smart enough to unilaterally (or after the fact) characterize the sale as a limited license instead." Cohen & Lemley, *supra*, at 34.

C. Licenses Granted To Manufacturing Licensees Can Carry Enforceable Conditions

Although restrictions imposed on *purchasers* are not enforceable through infringement suits, this Court has permitted conditions imposed on manufacturing *licensees*, restricting the terms under which they are authorized to make, use and sell the product.

In *Bement v. National Harrow Co.*, 186 U.S. 70, 91 (1902), this Court upheld a resale price restriction imposed on a manufacturing licensee. "The owner of a patented article can, of course, charge such price as he may choose, and the owner of a patent may assign it or sell the right to manufacture and sell the article patented upon the condition that the assignee shall charge a certain amount for such article." *Id.* at 93.

In *United States v. General Electric Co.*, 272 U.S. 476, 489–90 (1926), this Court stated that it was "well settled" that a patent owner "can exercise no future control over what the purchaser may wish to do with

the article" after an authorized sale, but that "the question is a different one which arises when we consider what a patentee who grants a license to one to make and vend the patented article may do in limiting the licensee in the exercise of the right to sell." This Court explained that *Motion Picture Patents* had overruled *A.B. Dick* but not *Bement*, and that the cases invalidating restrictions on purchasers did not apply to restrictions in manufacturing licenses. *Id.* at 493. Cases like *Bauer* and *Victor Talking Machine*, this Court wrote, "are only instances of the application of the principle of *Adams v. Burke* ... that a patentee may not attach to the article made by him, or with his consent, a condition running with the article in the hands of *purchasers*." *Id.* at 493–94 (emphasis added).

In *General Talking Pictures Corp. v. Western Electric Co.*, 304 U.S. 175 (1938), this Court held that if a purchaser knowingly buys from a manufacturing licensee in violation of a restriction in the license, both the licensee and the purchaser may be sued for infringement. Since the sale was unauthorized, the purchaser was not "a purchaser in the ordinary channels of trade" and exhaustion did not apply. *Id.* at 180–81.

The *General Talking Pictures* principle is consistent with *Mitchell*, and with the sound observation in *Bement* that the patentee is free to decide who it wishes to sell to (and on what terms) if it manufactures the patented article itself. "Restrictions on the purchasers of patented goods, however, cannot be viewed as equivalent to [self-imposed] restrictions on the patentee itself." Patterson, *supra*, at 165.

D. Exhaustion Does Not Depend on Whether the Patentee's "Conditions" Would Otherwise Violate Antitrust or Misuse Principles

The Federal Circuit held in *Mallinckrodt* that *Bauer* and *Motion Picture Patents* established only "that price-fixing and tying restrictions accompanying the sale of patented goods were *per se* illegal. These cases did not hold, and it did not follow, that all restrictions accompanying the sale of patented goods were deemed illegal." *Mallinckrodt*, 976 F.2d at 704. Treating patent exhaustion as nothing more than a species of competition or misuse law, the Federal Circuit held that "[t]he appropriate criterion is whether Mallinckrodt's restriction is reasonably within the patent grant, or whether the patentee has ventured beyond the patent grant and into behavior having an anticompetitive effect not justifiable under the rule of reason." *Id.* at 708. That test is incorrect and unworkable.

First, that is not what this Court's cases say. Misuse derives from the equitable doctrine of "unclean hands" and provides alleged infringers an affirmative defense where a patentee has extended his "monopoly" beyond its legal bounds until such time as the patentee has purged his misconduct. *See U.S. Gypsum Co. v. Nat'l Gypsum Co.*, 352 U.S. 457, 465 (1957); *Brulotte v. Thys Co.*, 379 U.S. 29, 32–33 (1964). Antitrust law is designed to foster competition by restricting unreasonable restraints of trade. But exhaustion defines the scope of the patent grant, as interpreted by this Court in light of general property law principles. Cohen & Lemley, *supra*, at 31; Kobak, *supra*, at 554. Although the exhaustion cases have often involved restraints with anticompetitive effects, this Court's

reasoning has never rested on antitrust principles.

In *Bauer*, for example, this Court rejected a patentee's attempt to restrict resale prices based on the "line of cases in which this court from the beginning has held that a patentee who has parted with a patented machine by passing title to a purchaser has placed the article beyond the limits of the monopoly secured by the patent act." 229 U.S. at 17. The exhaustion doctrine in the cited "line of cases" did not turn on antitrust concerns. And later in *Boston Store v. American Graphophone Co.*, 246 U.S. 8, 23 (1918), this Court described *Bauer* as holding that a patent holder "could not use and exhaust the right to sell, as to which a monopoly was given him by the patent law, and yet by conditions and stipulations continue that law in effect so as to make it govern things which by his voluntary act were beyond its scope." It also explained that *Motion Picture Patents* simply "reiterat[ed]" the rule that after an authorized sale a patentee "could not, by qualifying restrictions as to use, keep under the patent monopoly a subject to which the monopoly no longer applied." *Id.* at 25. The Federal Circuit reached a contrary conclusion in *Mallinckrodt* by dismissing this Court's actual reasoning in these key cases as "dicta." But "[w]hen the *Mallinckrodt* panel says that this is dictum, it is merely saying in a peculiar manner that it does not like the Supreme Court's reasoning and thinks that the Court should have held something else—that it should have reached its end result by a different conceptual route." Stern, *supra*, at 465; *see also* Patterson, *supra*, at 167–71.

Second, the Federal Circuit's focus on anticompetitive effects is inconsistent with the result in several of this Court's cases. In *Motion Picture*

Patents, the sale was "not only" subject "to restriction as to supplies to be used," (the "tying" restriction), but also "subject to conditions as to use or *royalty to be paid*[,] to be imposed thereafter at the discretion of the patent owner." 243 U.S. at 515, 516 (emphasis added). The patentee sought to impose a royalty "upon the purchaser graduated by the size of the theater in which the machine was to be used." *Id.* at 518. Graduated royalties are common and only *anticompetitive* in unusual circumstances. But this Court drew no distinction between that restriction and the restraints on resale or tying. *Id.* at 516. Instead, it emphasized that a good, after being "sold and paid for" could no longer be subject "to any restrictions or conditions as to use or royalty which the company which authorized its sale may see fit, after the sale, from time to time to impose." *Id.* at 515.

In *General Electric* and *Bement*, this Court *upheld* price-fixing conditions because they were imposed through a limited licensing arrangement (not after an authorized sale). *E.g.*, *Gen. Elec.*, 272 U.S. at 489–91. If exhaustion turned on antitrust policy, those conditions should have been invalidated. Stern, *supra*, at 464–65 (if exhaustion hinged on antitrust concerns, this Court "would have held GE guilty of price-fix antitrust violations, instead of exonerating it"). Since there had been no sale, however, the patent monopoly saved the price-fixing restriction from antitrust scrutiny.

Similarly, the restrictions in *Univis* clearly violated the Sherman Act as then interpreted. As in *General Electric*, the patentee argued that its restrictions were lawful nevertheless because they were contained in a valid patent license. This Court rejected that

argument only because it concluded that an authorized sale had exhausted the patent—and that the patentee's restrictions thus "derive[d] no support from the patent." *Univis*, 316 U.S. at 251–52.

Third, the Federal Circuit's test is circular and imposes no meaningful limits in practice. Whether a restriction is "within the patent grant" is precisely the question to be decided in exhaustion cases. On traditional principles *no* restrictions after an authorized sale are "within the patent grant," because the patentee's monopoly is exhausted. Once that bright line is abandoned there is no principled basis for distinctions. Indeed "as the requirement has in fact come to be interpreted" by the Federal Circuit, it "simply mean[s] that the defendant's activity in some way involves the patented invention." Patterson, *supra*, at 170. And, as illustrated by *Bement*, *A.B. Dick*, *General Electric*, and *Univis*, the Federal Circuit's purported scrutiny of whether a post-sale restriction is "anticompetitive" is also illusory. If exhaustion has not been triggered, then the power of the patent saves the restriction from antitrust review. Patterson, *supra*, at 176, 181.

E. Exhaustion Can Be Triggered By Sale Of An Unfinished Article Or Components

Of course the exhaustion doctrine does not apply to every sale of an uncompleted article or component. Sale of patented widgets with many uses, only some of which are infringing, will not exhaust patents covering one device that could be constructed with those widgets, or method claims covering one use for them. But this Court has recognized that if the patentee chooses to sell an unfinished article or component that

has *no reasonable use* other than to practice a patent or be finished into an infringing device, and if the sold article "embodies essential features" of the invention and is "within the protection of the patent" (i.e., an unlicensed seller could be sued for contributory infringement), then it is reasonable to say that he "has sold his invention so far as it is or may be embodied in that particular article." *Univis*, 316 U.S. at 250–51.

The *Univis* test harmonizes the exhaustion doctrine with the related law of contributory infringement. *See id.* at 249–50 (citing *Leitch Mfg. Co. v. Barber Co.*, 302 U.S. 458, 460–61 (1938); *B.B. Chem. Co. v. Ellis*, 314 U.S. 495, 497–98 (1942)); *id.* at 248 (assuming that "sale of the blanks by an unlicensed manufacturer to an unlicensed finisher for their completion would constitute contributory infringement by the seller"). This symmetry was codified by Congress in 1952. 35 U.S.C. §271(c) assesses contributory liability regardless of whether the vending party sold "a component of a patented machine," a "combination or composition," *or* "a material or apparatus for use in practicing a patented process." In all three instances, the seller is liable as a contributory infringer if the "component" sold "constitut[es] a material part of the invention," is known to be "especially made or adapted for use in an infringement of such patent," and is "not a staple article or commodity of commerce suitable for substantial noninfringing use." *Id.*

The exhaustion doctrine would be a dead letter if not triggered by sale of components that embody essential features of the invention and are within the protection of the patent. LGE could, for example, authorize the sale of computers that are finished but for the microprocessor to be inserted in a socket—and

thereby preserve its patent rights all the way down the distribution chain against end consumers who are required to perform the (trivial) final step in assembly.

F. Patent Exhaustion Applies To Method Claims

The Federal Circuit held that "the sale of a device does not exhaust a patentee's rights in its method claims." Pet. App. 6a. That too is inconsistent with precedent and the purposes of the exhaustion doctrine. This Court's cases show that method claims are subject to exhaustion, if that method will be practiced by the only reasonable use of the sold article.

In *Ethyl Gasoline Corp. v. United States*, 309 U.S. 436, 446 (1940), the patentee had patents covering lead additive and leaded fuel, and a method patent covering "a method of using fuel containing the patented fluid in combustion motors." The patentee took his reward solely by selling the lead additive to refiners, but specified that the refiners could only sell fuel to licensed distributors (called "jobbers"), and used its leverage over the distributors to maintain resale prices. The issue (as in *Univis*) was whether that resale price maintenance was within the patent grant. This Court held that "by the authorized sales of the fuel by refiners to jobbers the patent monopoly over it is exhausted, and after the sale neither [the patentee] nor the refiners may longer rely on the patents to exercise any control over the price at which the fuel may be resold." *Id.* at 457. Implicit in that analysis is a holding that the method patent was exhausted—since otherwise sales of fuel by jobbers would have been contributory infringement, and hence a legitimate subject of license restrictions.

Univis also involved a method patent—and,

although the treatment of that patent is unclear in the opinion,[10] this Court's reasoning applies equally to method claims covering the only reasonable use of the sold article. This Court held that sale of the lens blank was "a relinquishment of the patent monopoly with respect to the article sold," as well as with respect to "the final stage of the patent procedure." 316 U.S. at 249–50.

General Electric also involved a method patent. 272 U.S. at 480. Exhaustion did not apply because the defendant was a manufacturing licensee rather than a purchaser, not because the patent was for a method. *Id.* at 490. Likewise, in *Leitch*, 302 U.S. at 461, this Court held that purchasers of emulsion from the owner of a patented method to surface roadways were necessarily given legal authority to practice the

---

[10] *Univis* involved one pure method patent that "deal[t] primarily with the grinding procedure followed by the Univis wholesale and finishing retailer licensees in correcting for prismatic imbalance." Appellees & Cross-Appellants' Br. 23, *Univis Lens Co. v. United States* (U.S. Apr. 7, 1942) (Nos. 855, 856); *United States v. Univis Lens Co.*, 41 F. Supp. 258, 262–63 (S.D.N.Y. 1941) (U.S. Patent No. 1,869,769 covered "only a method for producing a lens to eliminate prismatic imbalance"). This Court's opinion said there were five (unspecified) method patents covering only the making of the blanks, and that "[e]ach of the remaining eight patents relates to the shape, size, composition, and *disposition* of the [lens blanks]." 316 U.S. at 246–47 (emphasis added). This Court ultimately determined that it could "put to one side questions which might arise if the finisher of a particular lens blank utilized the invention of some patent other than the patent which was practiced in part by the manufacture of the blank." *Id.* at 248. To do so, this Court must either have (1) concluded that the '769 patent was practiced in part at both stages, and was exhausted, or (2) erred in assuming that the patent was practiced only in making the blanks.

patented method. More recently, in *Dawson*, this Court (citing *Univis Lens* and *Adams*), accepted the parties' concession that a patentee's sale of a chemical specially suited for use in a patented process exhausts the patent in that process. 448 U.S. at 186.

Even the Federal Circuit has applied exhaustion to method claims. *Repeat-O-Type* involved an apparatus claim for ink cartridges and method claims for providing ink and filling ink reservoirs. The court stated that "use of the cartridges covered by the apparatus claims would necessarily infringe the asserted process claims" and cited *Univis* for the proposition that when a patentee sells a device, "it parts with the right to enforce *any* patent that ... would interfere with the use of the purchased device." 123 F.3d at 1455 (emphasis added); *see also Intel Corp. v. ULSI Sys. Tech., Inc.*, 995 F.2d 1566 (Fed. Cir. 1993) (no distinction made between apparatus and method claims in same patent described in district court opinion, 782 F. Supp. 1467, 1469 (D. Or. 1991)).

Any other rule would allow patentees to eradicate exhaustion. A patent may contain both apparatus and method claims directed at the same invention. *Manual of Patent Examining Procedure* §806.05(e); *United States ex rel. Steinmetz v. Allen*, 192 U.S. 543, 557 (1904) (rejecting PTO regulations prohibiting joinder of apparatus and process claims in the same patent); John R. Thomas, *Of Text, Technique, and the Tangible: Drafting Patent Claims Around Patent Rules*, 17 J. Marshall J. Computer & Info. L. 219, 226 (1998). If only apparatus claims can be exhausted, applicants will simply include a method claim covering the intended

use of the apparatus.[11] As this Court accepted over a century ago, apparatus and method claims "may approach each other so nearly that it will often be difficult to distinguish the process from the function of the apparatus." *Steinmetz*, 192 U.S. at 559. The Federal Circuit has recognized that "claims defining some inventions can by competent draftsmanship be directed to either a method or an apparatus[,]" and that "[t]here is nothing improper in this state of affairs." *Bandag*, 750 F.2d at 922.

This case exemplifies the problem. There is no dispute that each of the patents containing a method claim also includes an apparatus claim. JA220–267; *see also* Appellee Br. 33. Under LGE's infringement theory, Quanta's use of the sold products infringed both types of claims. To exempt method claims contained in the very same patent and infringed by the very same act would be to exalt form over substance and cut the heart out of the exhaustion doctrine.

II. LGE'S PATENT RIGHTS WERE EXHAUSTED BY INTEL'S AUTHORIZED SALES TO QUANTA

Under the principles explained above, LGE's rights in the three disputed patents were exhausted.

First, it is undisputed that Intel had authority to

---

[11] *See* Thomas, *supra*, at 225 ("Even the most novice claims drafter would encounter scant difficulty in converting a patent claim from artifact [i.e., apparatus] to technique [i.e., method] and back again."); *id.* at 252–53 (outlining an "exceptionally worthwhile" "drafting exercise" that would allow the patentee to "avoid altogether the usual principal that artifact claims are exhausted through the sale of artifacts" and permit the "force of the patent to intrude deeply into the stream of commerce").

sell these items to Quanta, and that Intel's sales did not constitute infringement.

Second, the District Court made a finding, undisturbed by the Federal Circuit, that if LGE's broad infringement claims are accepted these microprocessors and chipsets have no reasonable use that would not infringe LGE's combination and method patents. Pet. App. 46a. LGE contends that these patents are infringed whenever Intel's products are combined with busses and memory to make a functional computing device. Pet. App. 46a. LGE has never claimed that there are other *functional* uses. It has argued that Quanta could avoid technical infringement by using them overseas, or as replacement parts, or by disabling the patented functions—but such possibilities do not defeat exhaustion. Pet. App. 46a–49a.

Third, these microprocessors and chipsets clearly embody "essential features" of the patents. LGE repeatedly represented to the District Court that key limitations of its claims are embodied in Intel's products. *Supra* p. 7. That is obviously true, since the patent claims essentially cover ways that Intel microprocessors can keep on-chip cache memory in synch with external memory, and ways that Intel chipsets referee competing demands for access to data transfer busses. Although these patented functions will not operate until the microprocessors or chipsets are connected to busses or memory, they are carried out entirely within the microprocessor or chipset. *Everything* inventive about these patents is therefore

contained within Intel's products.[12]

Finally, under LGE's own infringement allegations Intel's products would be "within the protection of" LGE's patents but for Intel's license. The Intel-LGE license agreement arose directly out of LGE's contention that Intel's products contributorily infringe these patents. JA174.

The Federal Circuit's holding that exhaustion was not triggered because these sales were "conditional" or did not convey an "implied license" is, as explained above, based on a serious misunderstanding of this Court's precedents. Intel's sales to Quanta were not "conditional" in the historic sense relevant to exhaustion, because there was no condition precedent to the transfer of title. And there has been no such thing as a condition *subsequent* to the transfer of title, enforceable under the patent laws, since this Court overruled *A.B. Dick*.

The facts of this case illustrate the Federal Circuit's confusion. LGE imposed no "conditions" upon Intel's license authority to sell, and that license specified

---

[12] The *Univis* rule is clear and workable. Any component that embodies essential features of the patent and is contributorily infringing is, by definition, a substantial enough embodiment of the patent for an authorized sale to trigger exhaustion. *See, e.g.*, *Baldwin-Lima-Hamilton Corp. v. Tatnall Measuring Sys. Co.*, 169 F. Supp. 1, 32 (E.D. Pa. 1958) (holding that sale of a component could not constitute contributory infringement, even if specially adapted only to the invention, because it was not a "material part of the invention" as required by statute). But even if exhaustion might be inappropriate in extreme hypotheticals involving components that somehow were contributorily infringing but nonetheless trivial, the facts of this case would satisfy any sensible standard.

(although such clarification was unnecessary) that it would not alter the ordinary exhaustion consequences of Intel's sales. In a separate agreement, LGE did obtain a promise that Intel would send its customers a "notice" informing them that they did not obtain a "license" from LGE. JA164(¶3.8). But that agreement also specified that "[t]he parties agree that a breach of this Agreement shall have no effect on and shall not be grounds for termination of the Patent License." JA176(¶1). Regardless, Intel kept its promise. And LGE did not make Intel's authority to sell "conditional" on it obtaining any agreement *from Quanta*. The District Court correctly found that "Defendants' purchase of microprocessors and chipsets from Intel was in no way conditioned on their agreement not to combine the Intel microprocessors and chipsets with other non-Intel parts and then sell the resulting products." Pet. App. 58a.

The Federal Circuit has sometimes stated that exhaustion applies absent "a restriction having contractual significance," *Repeat-O-Type*, 123 F.3d at 1453, or an "express contractual undertaking by the purchaser," *Jazz Photo Corp. v. ITC*, 264 F.3d 1094, 1108 (Fed. Cir. 2001), *cert. denied*, 536 U.S. 950 (2002). And here, as in *Mallinckrodt*, it invoked the U.C.C. to suggest that Quanta agreed to LGE's conditions by failing to object to the notice. That analysis entirely misconceives the issue. LGE's complaint does not include a breach of contract claim. JA134–42. Regardless, breach of a contractual promise would not permit LGE to sue for patent infringement. Breach of a *patent license* does permit infringement suits, but only because a license is permission to do something that would otherwise be infringement. *See Storage*

Tech. Corp. v. Custom Hardware Eng'g & Consulting, Inc., 421 F.3d 1307, 1316 (Fed. Cir. 2005) ("uses" that exceed a license agreement constitute copyright infringement only when those uses would violate copyright law in the absence of any license agreement). Using or reselling goods after an authorized sale is not infringement. The Federal Circuit is simply ignoring the difference between a true conditional *license* and a mere contract fixing contractual rights after the patentee's statutory rights have been exhausted. That error "is especially troubling" because it "allow[s] patentees to use contract law to transform previously permissible conduct into patent infringement," effectively giving "patentees carte blanche to expand the scope of infringement." Patterson, *supra*, at 161, 193–200, 204.

Commentators have also recognized that the Federal Circuit's *ad hoc* "combination of contract law and patent law in the cases [has] prevented [it] from carefully focusing on either body of law." *Id.* at 177, 185; *see also* Cohen & Lemley, *supra*, at 33–34 ("One can reach that result only by mutilating contract law ...."). The Federal Circuit presumes that a "notice" denying the purchaser an implied-in-fact license creates a valid contract. But "notice of the terms that a seller would like to impose is not sufficient to establish a contract on the basis of those terms." Patterson, *supra*, at 185. As the "click wrap" and "shrink wrap" cases illustrate, there must be real scrutiny of whether the purchaser agreed.[13]

---

[13] *See, e.g., Step-Saver Data Sys., Inc. v. Wyse Tech.*, 939 F.2d 91, 104 (3d Cir. 1991) (where the seller does not obtain the purchaser's express assent, the purchaser "can reasonably believe

Here, as in *Mallinckrodt*, the Federal Circuit's reliance on the U.C.C. is perplexing. U.C.C. §2-202 relaxes the parol evidence rule, permitting contracting parties to offer evidence of "consistent" additional terms *on which the parties actually agreed* to supplement a non-integrated writing. But the Federal Circuit here never inquired whether Quanta agreed to such "additional" terms or whether its purchase contracts with Intel were fully integrated. And a new condition denying the purchaser the right to use the sold product for its only reasonable use is hardly a "consistent" additional term. §2-207, relied on in *Mallinckrodt*, is equally inapt. That provision governs non-material additional terms sent in "a definite and seasonable expression of acceptance or a written confirmation which is sent within a reasonable time" and not objected to. U.C.C. §2-207(1). But that assumes that the patentee is the accepting rather than offering party in the "battle of the forms," even though "the opposite conclusion seems more logical." Cohen & Lemley, *supra*, at 33 n.130. And, again, terms that "materially alter" the contract are not incorporated. U.C.C. §2-207(2)(b); Patterson, *supra*, at 186–87. "It simply is not true ... that a patentee can impose

---

that, while [the seller] desires certain terms, it has agreed to do business on other terms—those terms expressly agreed upon by the parties"); Patterson, *supra*, at 188–90 (discussing cases). Computer software also raises unique exhaustion issues because of the technical wrinkle that a new copy of a software program is made whenever it is loaded into memory to be used. Unlike purchasers of ordinary goods, therefore, software purchasers always need a kind of limited manufacturing license to make additional (transient) copies of the patented or copyrighted article. Self-replicating seeds raise the same problem, which obviously is not presented here.

contractual terms on a purchaser by publishing those terms in labels or trade journals, even if the purchaser sees those terms." *Id.* at 188.[14]

Finally, even if there were some room for "conditions" on sold goods enforceable through the patent laws, the condition here is indistinguishable from the one this Court called a "perfect instrument of favoritism and oppression" in *Motion Picture Patents*. 243 U.S. at 515. Here, as there, LGE has reserved the right to insist upon additional royalties, long after the sale, from anyone in the distribution chain it chooses to target (including end consumers), in an amount subject only to its sole discretion. This defeats the core principle that a patentee is entitled to only one royalty from each sale of the patented invention.

III. THIS COURT SHOULD ADHERE TO THE TRADITIONAL EXHAUSTION RULE.

A. Any Change Should Come From Congress

Article I entrusts patent policy to *Congress*, and this Court "require[s] a clear and certain signal from Congress before approving the position of a litigant who ... argues that the beachhead of privilege is wider,

---

[14] LGE has never sought rescission of the license agreement that gave Intel authority to make these sales, and could not. *See, e.g., Callanan v. Keesville, Ausable Chasm & Lake Champlain R.R. Co.*, 199 N.Y. 268, 284 (1910); Edwin E. Richards, *Drafting Licenses to Guide Whether Potential Disputes Lie in Contract or Infringement*, 7 Comp. L. Rev. & Tech. J. 45, 54 (2002) ("[R]escission by an aggrieved party allows that party to bring an action for infringement for any subsequent use of the property. Without rescission, the contract remains in force and limits the action to one of breach of contract."); Restatement (Second) of Contracts §384 (1981) (rescission requires party to tender back benefits of bargain).

and the area of public use narrower, than the courts had previously thought." *Deepsouth Packing Co. v. Laitram Corp.*, 406 U.S. 518, 531 (1972); *see also Bonito Boats, Inc. v. Thunder Craft Boats, Inc.*, 489 U.S. 141, 168 (1989) ("It is for Congress to determine if the present system of design and utility patents is ineffectual in promoting the useful arts in the context of industrial design."); *United States v. Dubilier Condenser Corp.*, 289 U.S. 178, 189 (1933) ("To the laws passed by the Congress, and to them alone, may we look for guidance as to the extent and the limitations of the respective rights of the inventor and the public.").

Despite a century and a half of opportunities, Congress has never seen a need to modify this Court's exhaustion precedents. Congress reenacted the patent laws in 1952 and changed various aspects of settled law, most notably in the areas of misuse and contributory infringement. But it did not alter the exhaustion doctrine. And, when amending the Patent Code again in 1988 to limit the defense of misuse, exhaustion remained unchanged. When "'judicial interpretations have settled the meaning of an existing statutory provision, repetition of the same language in a new statute indicates, as a general matter, the intent to incorporate its ... judicial interpretations as well.'" *Merrill Lynch, Pierce, Fenner & Smith, Inc. v. Dabit*, 547 U.S. 71, 85 (2006) (citation omitted) (alteration in original); *see also Square D Co. v. Niagara Frontier Tariff Bureau, Inc.*, 476 U.S. 409, 424 (1986) (There is a "strong presumption of continued validity that adheres in the judicial interpretation of a statute.").

B. Sound Policy and Economic Analysis Support The Traditional Exhaustion Rule

Regardless, the exhaustion doctrine rests on sound public policy and there is no good reason to reconsider it. This Court has always recognized that "[t]he inconvenience and annoyance to the public that an opposite [rule] would occasion are too obvious to require illustration." *Keeler*, 157 U.S. at 667. The Federal Circuit's holding threatens to constrain the free flow of patented goods, raise transaction costs throughout the economy, and grant patent owners a device for abusing market power while remaining immune from antitrust liability. There is no reason to endure these consequences when patentees can impose post-sale restrictions *by contract*—subject to the requirements of contract and antitrust law.

First, the exhaustion doctrine is grounded, in part, on property principles. *See* 35 U.S.C. §261 ("Subject to the provisions of this title, patents shall have the attributes of personal property."). A patented invention is "as much entitled to protection as any other property," *Seymour v. Osborne*, 78 U.S. (11 Wall.) 516, 533 (1870), but not *more* so. "[S]ince patents are privileges restrictive of a free economy, the rights which Congress has attached to them must be strictly construed so as not to derogate from the general law beyond the necessary requirements of the patent statute." *United States v. Masonite Corp.*, 316 U.S. 265, 278–80 (1942) (quoting *Pennock v. Dialogue*, 27 U.S. (2 Pet.) 1, 19 (1829); *Kendall v. Winsor*, 62 U.S. (21 How.) 322, 329 (1859)).

Post-sale restrictions that run with personal property are generally not allowed at common law.

Supra p. 19. The Federal Circuit thus has given patent owners greater rights to restrict the use and disposition of sold goods than sellers of unpatented goods and, for that matter, even other forms of intellectual property. *See* Kobak, *supra*, at 562 ("a clear difference now exists" because of *Mallinckrodt* "between post-sale restrictions on patented goods on the one hand and those on copyrighted and trademarked goods on the other"). In effect, it has enabled patent owners to create a form of property rights—personal property servitudes—not generally recognized in property law.

There are only a few well-recognized forms by which property rights may be conveyed. These forms allow parties to identify and verify, with manageable information costs, the legal interests that are being bought or sold.[15] If a property owner were permitted to divvy up his "bundle of sticks" in any manner he saw fit, the property regime would become too complex and inefficient to promote the free transfer of property to its greatest use. Thus, "incidents of a novel kind can[not] be devised and attached to property at the fancy or caprice of any owner." *Keppell v. Bailey*, 39 Eng. Rep. 1042, 1049 (1834). Our economy operates on the premise that a buyer of personal property like a car can trust that he has the right to use it—and does not need to investigate whether a prior owner has carved away some arbitrary limitation, such as the right to drive the car in Virginia. Real property law does permit certain arcane partial ownership interests, but

---

[15] *See generally* Merrill & Smith, *supra*; Henry Hansmann & Reiner Kraakman, *Property, Contract, and Verification: The Numerus Clausus Problem and the Divisibility of Rights*, 31 J. Legal Stud. 373 (2002).

it has also evolved costly systems for public recording and title searches.

Contract law allows parties to order their rights and relationships in far more novel and complex ways. But (with limited exceptions) it also requires privity and genuine agreement. The possibility of contract restrictions on the use of goods thus does not threaten to raise transaction or search costs generally. Buyers can trust that they already know about any relevant contractual restraints.

Petitioners did receive a "notice" from Intel. But as LGE conceded in its opposition to certiorari, nothing about its (or the Federal Circuit's) legal theory requires such notice. Br. in Opp. 19–20. LGE relies on the general principle of property law that a seller cannot convey greater title than he has. And "'[n]otice to the purchaser in such a case is not required, as the law imposes the risk upon the purchaser, as against the real owner, whether the title of the seller is such that he can make a valid conveyance.'" *Id.* (quoting *Mitchell*, 83 U.S. at 550). As the *amicus* brief filed in support of certiorari by Minebea Co., Ltd. explained, the Federal Circuit's decision is already being (correctly) interpreted to permit patentees to enforce "conditions" *even against purchasers without notice.*

Perhaps this Court could ameliorate the harshness of that result by inventing a new equitable jurisprudence of "notice" restrictions. But the need to do so illustrates how unprecedented the Federal Circuit's analysis is. And even if there were some reason to change traditional law to allow sellers to create equitable servitudes running with chattels, with or without notice, it would make little sense to limit

that ability to sellers of *patented* goods. Nothing about the policy arguments for or against such servitudes has anything to do with the goals of patent law, except in the sense that arbitrarily giving patentees special rights not enjoyed by other property owners might somehow further increase rewards to invention.

Second, the genius of the traditional exhaustion rule is that it greatly reduces transaction costs *without* reducing the patentee's reward. Exhaustion "does not deprive a patentee of his just rights, because no article can be unfettered from the claim of his monopoly without paying its tribute." *Keeler*, 157 U.S. at 666–67. A rational patentee cannot obtain more by negotiating separately with the manufacturer, distributor, retailer, and consumer than he could have obtained by charging the entire amount to the first party in the chain and relying on it to pass the cost along in the form of higher prices. There is only one monopoly profit to be obtained in any vertical distribution chain.[16] Quanta would not be willing to pay *more* for microprocessors free from LGE's patent claims if it wrote separate

---

16 *See* 3A Phillip E. Areeda & Herbert Hovenkamp, *Antitrust Law* ¶756b2 (2d ed. 2002) ("Under any given cost and demand conditions, there is but one optimal monopoly profit to be gained from the sale of an end product."); Richard A. Posner & Frank H. Easterbrook, *Antitrust Cases, Economic Notes, and Other Materials* 870 (2d ed. 1981) ("There is only one monopoly profit to be made from a chain of production."); Robert H. Bork, *The Antitrust Paradox* 229 (1978) ("vertically related monopolies can take only one monopoly profit"); *E&L Consulting, Ltd. v. Doman Indus., Ltd.*, 472 F.3d 23, 30 (2d Cir. 2006) ("'The power to restrict output to maximize profit is complete in the manufacturing monopoly, and there is no additional monopoly profit to be made by creating a monopoly in the retail distribution of the product."), *cert. denied*, 2007 U.S. LEXIS 10366 (Oct. 1, 2007).

checks to Intel and LGE, than if it wrote one larger check to Intel.

There is only one reason why a patentee might want to parcel its royalty out between different levels of the distribution chain: to prevent arbitrage among downstream buyers from eroding price discrimination. Subject to certain antitrust limitations, the law generally permits sellers to charge different prices to customers in different markets. Of course there is a risk that products from the "cheaper" market will leak into the one being charged higher prices or royalties, eroding profit margins (and willingness to pay) in the more expensive market. That phenomenon afflicts all sellers, and has nothing to do with the goals of patent law. Sometimes it can be prevented by contract. But patentees are not entitled to more powerful price discrimination tools than are available to ordinary sellers.

Third, the Federal Circuit's holding threatens to immunize patent owners for conduct that violates antitrust law. As this Court recognized in *General Electric* and *Univis*, a restriction genuinely within the patent monopoly is inherently immune from antitrust scrutiny. *Supra* p. 32. The exhaustion doctrine is therefore critical to maintaining rule of reason scrutiny over vertical restraints. The Federal Circuit's holding opens the door to a new era, like the one that briefly flourished after *A.B. Dick*, of patentees attaching "notices" that eliminate aftermarket competition by specifying "no resale" or "single use only," that monopolize service or parts markets by specifying "repair only by manufacturer" or "only with approved parts," or that expand the scope of the patent monopoly via tying to unpatented supplies. Patentees

will try resale price or exclusive territories restrictions that squelch both intra-brand *and inter-brand* price competition. A cooperative patentee would become the perfect enforcement mechanism for a downstream cartel. And both the internal logic of the Federal Circuit's test and past experience indicate that there will be no real scrutiny of competitive effects under either the patent or antitrust laws. *See, e.g.*, Patterson, *supra*, at 176; Kobak, *supra*, at 560–61.

Fourth, the Federal Circuit's holding that method claims can never be exhausted will also wreak havoc with commerce. Almost any device invention can be described as a method of using that device, and most are. If method claims become exempt from exhaustion, there will be an explosion of infringement suits seeking a second round of royalties from persons who (like Quanta) purchased goods and paid full price for them expecting that the patentee's claims were satisfied.

Finally, patentees have quite effective strategies at their disposal, and do not need this radical change in existing law. If LGE had wanted to extract its reward from Quanta rather than Intel, LGE could have come to Quanta and negotiated with it directly. A license granted to Quanta would insulate Intel from liability, because there is no contributory infringement without direct infringement. Or if LGE wanted for some reason to divide its royalty between Intel and Quanta, it could have authorized Intel to sell only to purchasers with a prior license from LGE. A sale in violation of such a restriction would entitle LGE to sue Intel for infringement, and perhaps the buyer as well. *Supra* p. 29. LGE could also build as complex a web of contractual obligations as its lawyers can dream up, and refuse to sell or license its patents until all relevant

parties have agreed to be bound.

That flexibility does mean that to some extent the dispute in this case turns on the form of the agreement. But particular legal forms have particular legal consequences, and holding parties to the form chosen does not defeat freedom of contract but enables it. And there are certain substantive limits. No matter how clever the drafter, a seller simply cannot transfer ownership of personal property and then try to enforce post-sale restrictions *under property law*—including the species of property law we call patent. An attempt to do that is not freedom of contract, but an unprecedented power to redefine the substantive scope of property rights and of the patent statutes.

LGE has never explained why it did not employ one of the lawful contracting strategies suggested above, or indeed what the purpose of this "condition" is supposed to be. It seems fatally doomed as a prospective licensing strategy. No rational company would pay LGE any significant royalty for a "license" to make and sell products that did not include the ability to sell those products free and clear of LGE's patent claims—since no rational customer would pay any significant price for a product that cannot be used without infringing. LGE's suggestion that this reservation will facilitate successive negotiations fairly allocating the value of the patent up and down the distribution chain is fanciful. If LGE can do this, then its negotiating leverage is not diminished in any way by the grant of a prior "license" to Intel. As Dell, Hewlett Packard, and Gateway explained in their *amicus* brief supporting certiorari, LGE could still come after Quanta with the full force of the patent laws, and then negotiate a similar non-exhausting "license" with Quanta and do

the same thing to Quanta's customers, all the way to end consumers. And none of these pricing decisions are genuinely independent. The value of a license to Quanta depends on whether Quanta's own customers will be free to use and sell their products, and if so at what price. If LGE demands outrageous royalties from the next level down, licenses purchased higher in the chain may be worthless. And indemnities against infringement liability, both contractual and under the U.C.C., are common. *See* U.C.C. §2-312. Exhaustion thus solves intractable multi-party negotiation problems.

Since no one would choose to do business with LGE on the terms it suggests, the only rational explanation for the present situation is the confused state of the law. Intel no doubt believed it was purchasing exhaustion for its customers, Quanta paid Intel full price believing exhaustion had occurred, and LGE hopes to extract a one-time windfall with regard to those past sales.[17] LGE is holding the entire computer industry hostage for billions of dollars in royalties for

---

[17] LGE argued in its brief in opposition that its position is consistent with the law of damages for past infringement, which allows the patentee to sue every infringer—not just whomever would have been the first purchaser. Of course courts allow the patentee to collect only one reasonable royalty, total, and are also sensitive to attempts by patentees to artificially expand the "base" against which that reasonable royalty is calculated by going after defendants farther down the value chain. *See, e.g., Glenayre Elecs., Inc. v. Jackson*, 443 F.3d 851, 864 (Fed. Cir. 2006); *Lucent Techs. Inc. v. Gateway, Inc.*, 2007 U.S. Dist. LEXIS 57135, at *74 (S.D. Cal. Aug. 6, 2007). The treatment of past damages also reflects the economic reality that if the initial manufacturer *had* paid the patentee for a license, the price would have been passed down and shared by the entire production chain.

incorporating Intel chips into their products—even though Intel has already paid LGE for an unrestricted license; even though Intel's products have no other reasonable use; and even though this Court has always held that "[p]atentees ... are entitled to but one royalty for a patented machine." *Millinger*, 68 U.S. at 350. The core purpose of the exhaustion rule has always been to prevent such vexatious demands.

CONCLUSION

The Federal Circuit's holding that patent exhaustion does not apply should be reversed.

Respectfully submitted,

MAUREEN E. MAHONEY
Counsel of Record
J. SCOTT BALLENGER
BARRY J. BLONIEN
MELISSA B. ARBUS
ANNE W. ROBINSON
LATHAM & WATKINS LLP
555 11TH STREET N.W.
SUITE 1000
WASHINGTON, D.C. 20004
(202) 637-2200
Counsel for Petitioners

TERRENCE D. GARNETT
VINCENT K. YIP
PETER WIED
PAUL, HASTINGS, JANOFSKY
& WALKER LLP
515 SOUTH FLOWER STREET
25TH FLOOR
LOS ANGELES, CA 90071
(213) 683-6000

MAXWELL A. FOX
PAUL, HASTINGS, JANOFSKY
& WALKER LLP
34 F ARK MORI BUILDING
P.O. BOX 577
12-32 AKASAKA 1-CHOME
MINATO-KU, TOKYO 107-6034
JAPAN
813 6229 6100

APPENDIX

35 U.S.C. § 154. CONTENTS AND TERM OF PATENT; PROVISIONAL RIGHTS

(a) In general.

(1) Contents. Every patent shall contain a short title of the invention and a grant to the patentee, his heirs or assigns, of the right to exclude others from making, using, offering for sale, or selling the invention throughout the United States or importing the invention into the United States, and, if the invention is a process, of the right to exclude others from using, offering for sale or selling throughout the United States, or importing into the United States, products made by that process, referring to the specification for the particulars thereof.

* * *

35 U.S.C. § 261. OWNERSHIP; ASSIGNMENT

Subject to the provisions of this title, patents shall have the attributes of personal property.

* * *

35 U.S.C. § 271. INFRINGEMENT OF PATENT

(a) Except as otherwise provided in this title, whoever without authority makes, uses, offers to sell, or sells any patented invention, within the United States or imports into the United States any patented invention during the term of the patent therefor, infringes the patent.

(b) Whoever actively induces infringement of a patent shall be liable as an infringer.

(c) Whoever offers to sell or sells within the United States or imports into the United States a component of a patented machine, manufacture, combination or composition, or a material or apparatus for use in practicing a patented process, constituting a material part of the invention, knowing the same to be especially made or especially adapted for use in an infringement of such patent, and not a staple article or commodity of commerce suitable for substantial noninfringing use, shall be liable as a contributory infringer.

* * *

15 56020

20

69pp No. 06-937

Supreme Court, U.S.
FILED
DEC 3 - 2007
OFFICE OF THE CLERK

IN THE

Supreme Court of the United States

QUANTA COMPUTER, INC.,
QUANTA COMPUTER USA, INC.,
Q-LITY COMPUTER, INC.,

Petitioners,

v.

LG ELECTRONICS, INC.,

Respondent.

On Writ of Certiorari to the United States Court of Appeals for the Federal Circuit

BRIEF OF RESPONDENT

CARTER G. PHILLIPS*
VIRGINIA A. SEITZ
JEFFREY T. GREEN
JEFFREY P. KUSHAN
RACHEL H. TOWNSEND
QUIN M. SORENSON
SIDLEY AUSTIN LLP
1501 K Street, N.W.
Washington, D.C. 20005
(202) 736-8000

Counsel for Respondent

December 3, 2007 * Counsel of Record

WILSON-EPES PRINTING CO., INC. – (202) 789-0096 – WASHINGTON, D. C. 20002

QUESTION PRESENTED

Whether a patent holder, by authorizing a manufacturing licensee to make and sell a component under a patent for that component, as a matter of law exhausts all of its patent rights under separate and independently issued patents for distinct systems and methods of which the component is only a part, particularly when purchasers of the component are expressly notified that they are not authorized to practice those independently issued patents.

TABLE OF CONTENTS

	Page
QUESTION PRESENTED	i
TABLE OF AUTHORITIES	iv
STATUTORY PROVISIONS INVOLVED	1
STATEMENT OF THE CASE	1
SUMMARY OF ARGUMENT	13
ARGUMENT	17
I. THE SALE OF A COMPONENT DOES NOT EXHAUST A PATENT HOLDER'S RIGHTS IN PATENTED SYSTEMS OF WHICH THE COMPONENT IS A PART	17
A. The Components Sold By Intel Do Not Embody The Patented Inventions At Issue	17
B. A Patent Holder May Restrict Its Licensee's Authority To License Customers To Practice Its Patents	35
II. PATENT HOLDERS MAY IMPOSE REASONABLE CONDITIONS ON THE SALE OF ARTICLES	39
III. THE EXHAUSTION DOCTRINE DOES NOT APPLY TO METHOD PATENT CLAIMS	51
CONCLUSION	53
STATUTORY APPENDIX	
17 U.S.C. § 109(a), (c)	1a
35 U.S.C. § 101	3a
35 U.S.C. § 154(a)(1)	4a
35 U.S.C. § 271(a)-(d)	5a
35 U.S.C. § 282	7a

TABLE OF AUTHORITIES

CASES Page

Adams v. *Burke*, 84 U.S. (17 Wall.) 453 (1873) 14, 41, 43
Alexander v. *Sandoval*, 532 U.S. 275 (2001) 46
Aro Mfg. Co. v. *Convertible Top Replacement Co.*, 365 U.S. 336 (1961) 18
Aro Mfg. Co. v. *Convertible Top Replacement Co.*, 377 U.S. 476 (1964) 21, 25, 43, 44, 50
Autogiro Co. of Am. v. *United States*, 384 F.2d 391 (Ct. Cl. 1967) 4
B.B. Chem. Co. v. *Ellis*, 314 U.S. 495 (1942) 22, 23
B. Braun Med., Inc. v. *Abbott Labs.*, 124 F.3d 1419 (Fed. Cir. 1997) 50
Bandag, Inc. v. *Al Bolser's Tire Stores, Inc.*, 750 F.2d 903 (Fed. Cir. 1984) 52
Bement v. *Nat'l Harrow Co.*, 186 U.S. 70 (1902) 35, 42, 49
Berenyi v. *Dist. Dir.*, 385 U.S. 630 (1967) 27
Boston Store of Chi. v. *Am. Graphophone Co.*, 246 U.S. 8 (1918) 20, 43, 44
Brenner v. *Manson*, 383 U.S. 519 (1966) 4, 21
Cardinal Chem. Co. v. *Morton Int'l, Inc.*, 508 U.S. 83 (1993) 13, 18
Conn. Nat'l Bank v. *Germain*, 503 U.S. 249 (1992) 46
Cotton-Tie Co. v. *Simmons*, 106 U.S. 89 (1882) 20, 21, 43, 49, 50
Dawson Chem. Co. v. *Rohm & Haas Co.*, 448 U.S. 176 (1980) 52

TABLE OF AUTHORITIES – continued

Page

Dr. Miles Med. Co. v. *John D. Park & Sons Co.*, 220 U.S. 373 (1911), *overruled by Leegin Creative Leather Prods., Inc.* v. *PSKS, Inc.*, 127 S. Ct. 2705 (2007) 47

Ethyl Gasoline Corp. v. *United States*, 309 U.S. 436 (1940) 52

Gayler v. *Wilder*, 51 U.S. (10 How.) 477 (1850) 47

Gen. Talking Pictures Corp. v. *W. Elec. Co.*, 304 U.S. 175 (1938) 31

Gen. Talking Pictures Corp. v. *W. Elec. Co.*, 305 U.S. 124 (1938) 31, 35, 40, 41, 42

Glass Equip. Dev., Inc. v. *Besten, Inc.*, 174 F.3d 1337 (Fed. Cir. 1999) 51

Gottschalk v. *Benson*, 409 U.S. 63 (1972) 51

Grant v. *Raymond*, 31 U.S. (6 Pet.) 218 (1832) 25, 49

Henry v. *A.B. Dick Co.*, 224 U.S. 1 (1912), *overruled in part by Motion Picture Patents Co.* v. *Universal Film Mfg. Co.*, 243 U.S. 502 (1917) 36, 41, 43

Hobbie v. *Jennison*, 149 U.S. 355 (1893) 41, 43

Jazz Photo Corp. v. *ITC*, 264 F.3d 1094 (Fed. Cir. 2001) 53

Keeler v. *Standard Folding Bed Co.*, 157 U.S. 659 (1895) 41, 43, 51

Leeds & Catlin Co. v. *Victor Talking Mach. Co.*, 213 U.S. 301 (1909) 18

Leegin Creative Leather Prods., Inc. v. *PSKS, Inc.*, 127 S. Ct. 2705 (2007) 47, 48

Mallinckrodt, Inc. v. *Medipart, Inc.*, 976 F.2d 700 (Fed. Cir. 1992) 45

Markman v. *Westview Instruments, Inc.*, 517 U.S. 370 (1996) 4

TABLE OF AUTHORITIES – continued

Page

Mercoid Corp. v. *Mid-Continent Inv. Co.*, 320 U.S. 661 (1944) 19, 22, 37
Metro-Goldwyn-Mayer Studios Inc. v. *Grokster, Ltd.*, 545 U.S. 913 (2005) 25, 31
Miller v. *Eagle Mfg. Co.*, 151 U.S. 186 (1894) 4, 18
Mitchell v. *Hawley*, 83 U.S. (16 Wall.) 544 (1872) ..... *passim*
Motion Picture Patents Co. v. *Universal Film Mfg. Co.*, 243 U.S. 502 (1917) ..... *passim*
Pennock v. *Dialogue*, 27 U.S. (2 Pet.) 1 (1829) 49
RCA Mfg. Co. v. *Whiteman*, 114 F.2d 86 (2d Cir. 1940) 49
Rubber Co. v. *Goodyear*, 76 U.S. (9 Wall.) 788 (1869) 36
Special Equip. Co. v. *Coe*, 324 U.S. 370 (1945) 22
United States v. *Gen. Elec. Co.*, 272 U.S. 476 (1926) ..... *passim*
United States v. *Masonite Corp.*, 316 U.S. 265 (1942) 43, 44, 48
United States v. *Univis Lens Co.*, 316 U.S. 241 (1942) ..... *passim*

CONSTITUTION AND STATUTES

U.S. Const. art. I, § 8 33
17 U.S.C. § 109 ..... 16, 47
35 U.S.C. § 101 18
§ 154 ..... *passim*
§ 261 ..... 25, 37
§ 271 ..... *passim*
§ 282 ..... 18, 21

TABLE OF AUTHORITIES – continued

RULE Page

Sup. Ct. R. 14.1(a) 13, 18

SCHOLARLY AUTHORITIES

Zechariah Chafee, Jr., Comment, *Music Goes Round and Round: Equitable Servitudes and Chattels*, 69 Harv. L. Rev. 1250 (1956) 49

Frank H. Easterbrook, *Contract and Copyright*, 42 Hous. L. Rev. 953 (2005)..... 38

Thomas W. Merrill & Henry E. Smith, *Optimal Standardization in the Law of Property: The Numerus Clausus Principle*, 110 Yale L.J. 1 (2000) 49

Thomas Reed Powell, *The Nature of a Patent Right*, 17 Colum. L. Rev. 663 (1917) 42

3 W. Robinson, *Treatise on the Law of Patents* (1890)..... 42

OTHER AUTHORITY

U.S. Dep't of Justice & FTC, *Antitrust Guidelines for the Licensing of Intellectual Property* (1995) 38

STATUTORY PROVISIONS INVOLVED

The relevant statutory provisions are reprinted in an appendix to this brief.

STATEMENT OF THE CASE

1. Respondent LG Electronics, In. ("LGE") owns patents that claim components, including microprocessors and chipsets, used in personal computers.[1] *E.g.*, A4701.078; A4701.072-.073; A4588.296-.302; A4559. LGE also owns separate and independent patents that claim systems and methods that combine such components with other devices, such as memory chips and bidirectional universal switches (commonly known as a "bus"), to produce an operational computing system. A4701.073-.075; JA199-67.[2] These patented systems and methods are practiced only when all of these components and devices are connected in the manner described by the patents, which enables the prescribed processes to occur – for example, allowing the system bus to send "read requests" and "write requests" to be "buffered" by the chipset. *E.g.*, JA263-66. These patented systems and methods produce substantial benefits for finished personal computers, increasing computing speed and operational efficiency. JA211; JA231; JA255; A6027.

---

[1] A microprocessor interprets program instructions and processes data for a computer; a chipset is a collection of integrated circuits that instructs the computer how to organize and transmit data.

[2] A memory chip stores data that is accessed and addressed by the microprocessor and chipset. A bus coordinates and enables the effective transmission of data from the microprocessor and chipset to various input/output devices, such as a keyboard, game controller, barcode reader, monitor, hard disk, or printer.

LGE licensed Intel Corporation ("Intel") to manufacture and sell microprocessors and chipsets under the LGE component patents. JA149 (§ 1.13); JA152 (§ 1.23); JA154 (§ 3.1). It also granted Intel a license to practice the separate LGE systems and methods patents; however, importantly, LGE expressly prohibited Intel from conveying any license to its customers to practice the separate patents with non-Intel components or devices. JA147-49 (§§ 1.6, 1.13); JA164 (§ 3.8); JA174-75. Indeed, LGE required Intel to notify its customers that Intel did not and could not license them to combine the patented components with non-Intel parts to produce the separately patented systems and methods. JA176-77; JA198.

Petitioners are a related group of companies recognized as the world's leading producer of notebook computers, with more than ten billion dollars in annual sales. As Intel's customers, they purchased patented microprocessors and chipsets from Intel, and they received the notice required by LGE. Pet. 40a; A3960. Nevertheless, petitioners disregarded this notice and proceeded to do precisely what they were informed they had no authority to do: they combined and used Intel microprocessors and chipsets with non-Intel devices to produce the systems and methods claimed under LGE's patents. Petitioners do not dispute that they were not licensed or otherwise expressly authorized by LGE to practice these patents. Instead, they assert that LGE, by licensing Intel to manufacture and sell merely the components, necessarily and *as a matter of law* relinquished – or "exhausted" – LGE's rights to preclude purchasers of those components from

practicing the independent systems and methods patents.[3]

This case thus presents the novel question whether the sale of a patented article by a patent owner or its licensee exhausts not only patent rights in the article actually sold (here, the components), but also patent rights under independently granted patents on patentably distinct inventions which are practiced in part with that article (here, the systems and methods). Critically, the only patents in suit are those for the systems and methods; LGE does *not* claim that petitioners are infringing the patents for the individual components, since those components were sold to petitioners by LGE's authorized licensee. JA136-39. Therefore, this case does *not* present the question whether or under what circumstances the sale of an article exhausts the patent rights in the article actually sold.

No precedent of this Court supports a finding that LGE's rights in the patented systems and methods were exhausted by the sale of the separately patented components. Even if the sale of a patented article exhausts certain patent rights *in that article*, it does not exhaust patent rights in separate patented inventions merely because those inventions incorporate that article. Petitioners' claim that the components sold nonetheless "embody" the systems and methods that are separately patented must be rejected as a premature challenge to the validity of the systems and methods patents.

---

[3] The several other computer systems manufacturers named as defendants in the underlying district court actions have since reached settlements with LGE, agreeing to pay royalties to LGE in return for a license to manufacture and sell LGE's patented systems and methods. *See* Pet. Br. ii; Pet. ii.

2. "The claims of the patent provide the concise formal definition of the invention." *Autogiro Co. of Am.* v. *United States*, 384 F.2d 391, 395 (Ct. Cl. 1967); see *Markman* v. *Westview Instruments, Inc.*, 517 U.S. 370, 373 (1996). The claims are numbered paragraphs which "particularly poin[t] out and distinctly clai[m] the subject matter which the applicant regards as his invention." *Markman*, 517 U.S. at 373 (quoting 35 U.S.C. § 112). The PTO's issuance of a patent for an invention means that the invention is "distinctly different and independent" from claims in other patents. *Miller* v. *Eagle Mfg. Co.*, 151 U.S. 186, 198 (1894); see *Brenner* v. *Manson*, 383 U.S. 519, 528-36 (1966).

3. LGE is part of a family of companies that invent, make, and sell computers, mobile phones, and numerous other products. This case originally involved five LGE patents, but only three are before this Court. These patents claim computer systems and methods for improved processing, retrieving, and/or transmitting of data within a personal computer system. The patented systems are produced by combining microprocessors, chipsets, and other devices (such as a bus, memory, and peripherals). *E.g.*, JA216 (claim 1); JA242-43 (claim 15); JA263 (claim 1). These other devices are essential to the patented systems; without them, the systems cannot function as intended. The patented methods are executed by coordinating those components and devices to enable certain processes – for example, allowing the system bus to send "read requests" and "write requests" to be "buffered" by the chipset (thereby improving the efficiency of data transfer). JA263-64 (claim 7). LGE also owns patents claiming individual components used in the systems and methods, including the chipset and

microprocessor, *e.g.*, A4701.072-.073 (U.S. Patent 5,123,108), but the patents claiming these components – which are independent of the patents claiming the systems and methods – are not at issue here, JA136-39.[4]

Personal computers that utilize the systems and methods claimed under the patents are more valuable and offer significant competitive advantages in the personal computer market. In 2002, the sales price of Intel microprocessors used in making personal computing systems was approximately $268.00 to $288.00, and the sales price of Intel chipsets was approximately $34.50 to $36.50 per unit. Bizcom Dckt 202 (9); Bizcom Dckt 204 (Morris Decl. ¶¶ 19-24, Exs. 24-29). Personal computing systems that combine these microprocessors and chipsets with other devices under LGE's patented systems and

---

[4] The systems and methods patents in suit are U.S. Patent Nos. 5,077,733, 4,939,641, and 5,379,379. The '733 patent claims at issue (claims 15-19) are method claims. All involve methods for controlling a peripheral component's access to a bus shared by multiple devices, to prevent one device from hogging use of the bus by limiting each device's time of access. JA242-43. The '641 patent claims at issue (claims 1, 5-9, 14) are all system claims for ensuring that outdated data from a computer's main memory are not used by a component requesting data. JA216-17. The '379 patent claims at issue (claims 1, 7, 22-23) include system and method claims. These claims involve sequencing the processing of data to prevent access to outdated data in the computer's memory. JA263-67. The claims in the component patents are not in suit: for instance, LGE did not pursue an action for infringement against petitioners under U.S. Patent No. 5,123,108, covering microprocessors, because LGE had expressly authorized Intel to sell the microprocessors to its customers. *See* Dckt 202 (7), *LG Elecs., Inc.* v. *Bizcom Elecs., Inc.*, No. 4:01-cv-01375 (N.D. Cal.) ("Bizcom Dckt"); *see also infra* note 6 (acknowledging exhaustion).

methods are ultimately sold for $2299.00. Bizcom Dckt 202 (9), 204.

Intel approached LGE in 1999 in order to obtain a license to LGE's valuable portfolio of patents related to Intel's business. In September 2000, LGE and Intel negotiated a mutual licensing arrangement regarding their respective patented technologies. JA145; JA154-55; JA176. The arrangement included hundreds of United States and foreign patents, covering diverse areas of computer hardware, printers, scanners, and video technologies. Bizcom Dckt 135 (3-4); Bizcom Dckt 202 (5). The companies simultaneously entered into two agreements – a Patent Cross License Agreement and a Master Agreement – to settle all potential infringement claims against each other. JA145; JA 154-55 (§§ 3.1-3.2); JA163-64 (§§ 3.7-3.8); JA174-77.

Under these agreements, LGE and Intel granted each other non-exclusive worldwide cross licenses. As relevant here, Intel was licensed to manufacture, use, and sell microprocessors and chipsets that embodied LGE's component patents, and also to manufacture, use, and sell computer systems that embodied LGE's systems and methods patents.[5] Pet. 26a, 29a. Intel

---

[5] The Master Agreement provides:

> WHEREAS Intel desires to acquire a license and a release with respect to only Intel products made for or by Intel and not for the products that computer system manufacturers make by combining Intel processors and chipsets with non-Intel components and materials;
>
> * * * *
>
> WHEREAS LGE is willing to grant a license and a release under the Patent License . . . only for Intel branded products . . . .

JA174-75.

The Patent Cross Licensing Agreement provides:

exercised its right to manufacture and sell the patented components, but it did not make, use, or sell the patented computing systems and methods. See, *e.g.*, Dckt 144 (3:9-13), *LG Elecs., Inc.* v. *Q-Lity Computer, Inc.*, No. 4:01-cv-02187 (N.D. Cal.) ("Q-Lity Dckt").

The agreements make clear that Intel was not authorized to license its customers to practice LGE's patented systems and methods with non-Intel parts. The Patent Cross License Agreement states: "[N]othing in the licenses granted hereunder or otherwise contained in this Agreement shall expressly or by implication, estoppel or otherwise give either party any right to license the other party's Patents to others." JA164 (§ 3.8). The Master Agreement reiterates: "LGE's grant of a license to Intel . . . shall not create any express or implied license under LGE's patents to computer system

---

> 3.1 *LGE License to Intel.* Subject to the terms and conditions of this Agreement, LGE hereby grants to Intel a non-exclusive, non-transferable, fully paid-up, worldwide license, without the right to grant sublicenses, under LGE's Patents . . . .
>
> * * * *
>
> 3.7 *Waiver of Indirect Infringement Liability.*
>
> * * * *
>
> (b) Each party agrees that during the term of this agreement, it will not assert a claim of Indirect Infringement against the other party ("Licensed Party") where such a claim would be based in any part or in any way upon (a) any activity for which the Licensed Party is licensed under this Agreement, or (b) the Licensed Party providing instruction regarding or sample designs related to its Licensed Products. The parties agree that the foregoing sentence does not and shall not in any way limit their respective rights to assert direct or indirect claims of infringement against third parties.

JA153; JA163-64.

makers that combine Intel [components] with other non-Intel components to manufacture [the patented systems]."[6] JA176 (2). Intel customers that wished

---

[6] The Master Agreement provides:

> WHEREAS LGE and Intel do not intend this Agreement or the Patent License (as defined below) to give rise to implied license rights in computer system manufacturers under LGE's patents in the instance where the computer system manufacturers combine Intel processors and/or chip sets with non-Intel components to produce mother boards, computer subsystems, and computer systems, such as desktop, notebook, and server computers;
>
> * * * *
>
> 2. LGE and Intel intend and acknowledge that LGE's grant of a license to Intel for Integrated Circuits as defined in the Patent License shall not create any express or implied license under LGE's patents to computer system makers that combine Intel Integrated Circuits with other non-Intel components to manufacture motherboards, computer subsystems, and desktop, notebook and server computers.

JA175-76.

The Patent Cross License Agreement provides:

> 3.8 *No Implied Licenses or Other Rights.* No other rights are granted hereunder, by implication, estoppel, statute or otherwise, except as expressly provided herein. Specifically . . . nothing in the licenses granted hereunder or otherwise contained in this Agreement shall expressly or by implication, estoppel or otherwise give either party any right to license the other party's Patents to others, and (b) no waiver, license or immunity is granted by either party hereto directly or by implication, estoppel or otherwise to any third party for the combination by a third party of Licensed Products of either party with items, components, or the like acquired (directly or indirectly) from sources other than a party hereto, or for the use, import, offer for sale or sale of such combination . . . . Notwithstanding anything to the contrary contained in this Agreement, the parties agree that nothing herein shall in any way limit or alter the effect of patent exhaustion that would otherwise apply when a party hereto sells any of its Licensed Products.

JA164.

to produce the patented systems and methods by combining Intel components with non-Intel parts would have to negotiate separately with LGE to obtain that authority.

To avoid misunderstanding, the Master Agreement also spelled out the written notice that Intel was required to provide its customers:

> It has recently come to Intel's attention that LG Electronics (LGE) has contacted you and claimed that certain of your products infringe certain of LGE's patents. I am writing to notify you that Intel recently obtained a broad patent license from LGE. This patent license ensures that any Intel product that you purchase is licensed by LGE and thus does not infringe any patent held by LGE or any of LGE's subsidiaries.
>
> This patent license is consistent with Intel's policy of standing behind its products. Please note however that while the patent license that LGE granted to Intel covers Intel's products, *it does not extend, expressly or by implication, to any product that you make by combining an Intel product with any non-Intel product.*

JA198 (emphasis supplied); see JA177 (4).

Petitioners purchased microprocessors and chipsets from Intel. It is undisputed that petitioners received the required notice informing them that they had no license to practice the systems and methods patents with non-Intel parts, Pet. 4, but nonetheless did so. Those new machines manufactured by petitioners contain all of the elements required by the LGE systems and methods patents. When sued for the infringement, petitioners claimed that the sale of the Intel microprocessors and chipsets somehow exhausted LGE's patents *not* in the components but

in the separate and independently patented systems and methods.[7] Q-Lity Dckt 144 (10-11).

4. The district court held that LGE's rights in the patents in suit had been "exhausted" because petitioners had purchased components used to make the patented combinations from Intel, LGE's non-exclusive licensee. *E.g.*, Pet. 47a-48a. Notably, the court recognized that the patented components were separate from the patented systems and methods. *Id.* at 29a-30a, 40a, 45a n.7. And it did not find or suggest that the components embrace "essential features" of the patented systems and methods. Instead, based on the finding that the "sole purpose" of the components was for use in the patented systems, the district court concluded that the sale of the components exhausted LGE's rights in the systems claims of the patents in suit. *Id.* at 39a-43a, 48a.

Notwithstanding this finding with respect to LGE's rights in the patented *systems*, the court held that LGE's rights in the patented *methods* had not been exhausted. Pet. 52a-53a. Method claims, the court stated, are not subject to the exhaustion doctrine, and the sale of components to petitioners had no effect on LGE's rights to enforce the method claims. *Id.* It further ruled that petitioners had no implied license to practice any of the method claims of the patents in suit "because Intel expressly disclaimed the existence

---

[7] LGE has never suggested that Intel is liable for *direct* infringement of the systems and methods patents, since Intel does not practice those patents. LGE's licensing arrangement with Intel eliminated Intel's potential liability for *contributing to* infringement of those patents by its customers, including petitioners, which used the components sold by Intel to practice LGE's patents in suit without license from LGE. *See supra* note 5 (waiving "indirect infringement liability").

of such a license." *Id.* at 53a, 61a. In subsequent decisions, the district court held that the method claims in LGE's patents had not been infringed, and entered final judgment against LGE on its infringement claims, dismissing all counterclaims as moot.[8] *Id.* at 61a-65a, 69a-70a, 80a.

5. On appeal, the Federal Circuit scrutinized petitioners' defense to infringement under two distinct legal theories. First, the court considered whether the conduct of LGE and its licensee Intel in their dealings with petitioners had given rise to an implied license for petitioners to practice the patented systems and methods. Pet. 3a-4a. Second, the court of appeals determined whether LGE's patent rights in the systems and methods patents had been exhausted by Intel's sale of the patented microprocessors and chipsets. *Id.* at 4a-6a.

As to the possibility of an implied license, the Federal Circuit affirmed the trial court's determination that LGE and Intel had not by their conduct conveyed a license to petitioners authorizing the practice of LGE's systems and methods patents. Pet. 4a. As the court explained, "Intel expressly informed [petitioners] that Intel's license agreement with LGE did not extend to any of defendant's products made by combining an Intel product with non-Intel products. In light of this express disclaimer, no license can be implied." *Id.*

The Federal Circuit reversed the district court's determination that rights under the systems patents in suit had been exhausted. The court first noted that "[t]he patents asserted by LGE do not cover the

---

[8] The district court's judgment of non-infringement was overturned in many respects by the Federal Circuit. Pet. 6a-25a. None of these rulings is at issue.

products licensed to or sold by Intel; they cover those products when combined with additional components." Pet. 4a; see *id.* at 5a ("this sale involved a component of the asserted patented invention, not the entire patented system").

The court stated that the patent exhaustion doctrine is "triggered by an unconditional sale [of the patented device]." Pet. 4a-5a. "The theory behind this rule is that in such a transaction, the patentee has bargained for, and received, an amount equal to the full value of the [patented device]." *Id.* at 5a. The court also reasoned that, in an expressly conditional sale, "it is more reasonable to infer that the parties negotiated a price that reflects only the value of the [particular] rights conferred by the patentee." *Id.* (citation omitted).

The court then explained that "[t]he LGE-Intel license expressly disclaims granting a license allowing computer system manufacturers to combine Intel's licensed parts with other non-Intel components" and that the parties' agreement further "required Intel to notify its customers of the limited scope of the license, which it did." Pet. 6a. Thus, "Intel's customers were expressly prohibited from infringing LGE's combination patents." *Id.* In this setting, the court concluded, LGE's rights in its systems patents were not exhausted.

Finally, the court affirmed the district court's decision that LGE's method claims were not exhausted, stating that, "even if the exhaustion doctrine were applicable to method claims, it would not apply here because there was no unconditional sale." Pet. 6a. In any event, the court added, "the sale of a device does not exhaust a patentee's rights in its method claims." *Id.*

Rehearing was denied, and the case was remanded for further discovery and trial.

SUMMARY OF ARGUMENT

1. A significant fact in this case is one that petitioners have studiously ignored: The components which petitioners purchased from Intel are independent and distinct products from the patented systems that petitioners now claim "authority" to practice. 35 U.S.C. §§ 154(a)(1), 271(a) (prohibiting parties from practicing patents "without authority"). The United States Patent and Trademark Office ("PTO") concluded as such by issuing independent patents for the components and for the systems, see *id.* §§ 101, 282, and both the district court and Federal Circuit recognized that the patented systems are distinct from the components actually sold by Intel. Petitioners have not challenged these conclusions or the validity of these patents on appeal or in the petition for certiorari, and they are precluded from doing so at this stage. See Sup. Ct. R. 14.1(a); see also *Cardinal Chem. Co.* v. *Morton Int'l, Inc.*, 508 U.S. 83, 96 (1993). They must therefore accept as fact that (i) the patents in suit represent independently patentable inventions relative to the components that were sold, and (ii) the sale of the patented components does not and cannot constitute a sale of the patented systems.

Nevertheless, petitioners argue that the sale of the patented components necessarily, *as a matter of law*, invested them with the absolute right to practice LGE's separately patented systems. This position represents a serious misinterpretation, and unwarranted expansion, of the patent exhaustion doctrine. The exhaustion doctrine has always been defined by this Court as stating that the

unconditional sale of a patented article exhausts the patent rights *in that article*. *Adams* v. *Burke*, 84 U.S. (17 Wall.) 453, 456 (1873). The doctrine does not and has never, in its nearly 200 year history, been held to state that the sale of a patented article exhausts a patent holder's rights in independently issued patents, beyond the one that claims the invention embodied by the article sold. Such a rule would improperly collapse the separate patents, which grant rights in independently patentable inventions, and amounts to nothing more than an untimely and indirect argument of patent invalidity.

Indeed, the principal case on which petitioners rely, *United States* v. *Univis Lens Co.*, 316 U.S. 241 (1942), supports a much more limited rule regarding patent exhaustion. *Univis* held that the sale of a lens blank manufactured under a patent exhausted the patent holder's rights in a finished lens made by subjecting the blank to a finishing process under the *same patent*. *Id.* at 248-52. Unlike this case, in *Univis* the product sold (the lens blank) actually embodied the patent at issue. *Id.* There was no patentable distinction between the lens blank and the finished lens, and no additional components had to be combined with the blank to produce the patented invention. *Id.* *Univis* simply applied standard exhaustion analysis to conclude that the sale of a patented article exhausts patent rights *in that article*. Nothing in *Univis* stands for the sweeping rule advanced by petitioners, that the sale of an article can exhaust patent rights in independently patented systems that incorporate that article.

2. Nor is there any basis to say that petitioners gained authority to practice the patented systems under the doctrine of implied license. LGE licensed Intel to manufacture and sell certain components of

personal computer systems, but it expressly declined to authorize Intel to license Intel's customers to practice LGE's patented systems with non-Intel components. Petitioners do not dispute that they were notified of this restriction, and they concede that a patent holder may impose restrictions on the manner in which its licensees practice its patents. Nor do they challenge the holdings of *both* lower courts in this case that the sale of the components *did not* give rise to an implied license to practice the systems patents with non-Intel parts, because it is undisputed that Intel expressly informed petitioners that no such license was being conveyed. Petitioners received no license to practice the patented systems, and they can claim no authority under patent law to do so.

3. Moreover, even assuming (contrary to the record and the actions of the PTO) that the sale of the patented components could somehow have constituted a sale of the independently patented systems, thereby exhausting certain of LGE's rights in those patents, LGE still would be permitted to enforce against petitioners the restriction on practicing the patents with non-Intel parts. While the sale of an article may preclude a patent holder from enforcing conditions on "selling" or "using" that article – since the patent holder has arguably exhausted those rights through the sale – it does not prevent the patent holder from enforcing restrictions on the "making" of the article. See 35 U.S.C. §§ 154(a)(1), 271(a) ("Every patent shall . . . grant to the patentee . . . the right to exclude others from making, using, offering for sale, or selling the invention throughout the United States . . . ."). Notwithstanding the sale of an article, patent holders always retain the right to preclude others from

"making" the patented innovation or otherwise practicing the patent without authorization. LGE is therefore entitled to enforce against petitioners, through a suit for patent infringement, the express restriction on making the patented systems with non-Intel parts.

4. Petitioners' contrary argument stretches a judge-made infringement defense beyond the breaking point. It is noteworthy that Congress did not include in the Patent Act express statutory sections providing generally for exhaustion of patent rights, as it did in the Copyright Act. Cf. 17 U.S.C. § 109(a), (c). The legal foundation of the doctrine of exhaustion of patent rights rests exclusively on judge-made law. That Congress has not acted to codify this principle generally in more than 150 years militates in favor of a more limited and conventional interpretation of the doctrine, and certainly does not support the broad expansion advanced by petitioners. In fact, when Congress has spoken on the subject of patent rights, it has often done so to reinforce – not to limit – the discretion of patent holders to enforce their patent rights despite the sale of an article to be used in practicing the patent. See 35 U.S.C. § 271(d)(2).

The rule of law proposed by petitioners furthers no legal or economic policy embodied in the Patent Act. In addition to trivializing patent rights in combination inventions – recognizing that nearly all patentable combinations are made from "old" components – it contravenes traditional notions of property as a bundle of rights that may be sold or licensed in part, in whole, or not at all. It will require holders of combination patents to extract the full economic value of their patent rights from the first purchaser of any component that is to be used in that

combination. This will discourage both innovation and rational risk and cost allocations among different users of technology. Nor is petitioners' rule necessary to guard against anticompetitive conduct: tying arrangements, price controls, and other prohibitions on the sale or use of a patented article would continue to be outside the patent protection and fully subject to antitrust law under LGE's approach. There is no reason under patent law or economic principles to deny to a patent holder such as LGE the right to place reasonable restrictions on the licensing or practice of its patented inventions.

ARGUMENT

I. THE SALE OF A COMPONENT DOES NOT EXHAUST A PATENT HOLDER'S RIGHTS IN PATENTED SYSTEMS OF WHICH THE COMPONENT IS A PART.

A. The Components Sold By Intel Do Not Embody The Patented Inventions At Issue.

1. Petitioners' arguments are based on a sleight of hand. Petitioners treat the Intel components as if they embody every feature of LGE's patented systems. This is plainly wrong. The components sold to petitioners by Intel are patented, but those patents are not the patents in suit. Rather, the patents in suit define and claim separate systems that petitioners have elected to practice. Specifically, LGE's systems patents are practiced only when components, including the Intel-manufactured microprocessors or chipsets, are combined with other devices – such as memory, system buses, and input/output devices – to create personal computer systems.

This fundamental distinction between the *components* used in the systems and the *systems* made in part with those components is conclusively demonstrated by the issuance of separate and independent patents on the components and the systems by the PTO. Each of these patents must be presumed valid, see 35 U.S.C. § 282; indeed, their validity cannot be challenged by petitioners at this stage of the proceedings, see Sup. Ct. R. 14.1(a); see also *Cardinal Chem.*, 508 U.S. at 96. Because only one patent may be issued per invention, 35 U.S.C. § 101; *Miller*, 151 U.S. at 197, the issuance of separate patents for the components and for the systems shows that the components and systems are independent and distinct inventions under patent law.

The basic fallacy in petitioners' contrary argument is that "it requires the ascribing to one element of patented combination[s] the status of the patented invention in itself." *Aro Mfg. Co.* v. *Convertible Top Replacement Co.*, 365 U.S. 336, 344-45 (1961). But, "if anything is settled in the patent law, it is that the combination patent covers only the totality of the elements in the claim and that no element, separately viewed, is within the grant." *Id.* Even if "an element is . . . an essential part[] of the combination, . . . this does not make it identical with the combination. It may be novel, patentable of itself, subject to its own special monopoly, or it may be free for everybody's use, but . . . it is not identical with the combination." *Leeds & Catlin Co.* v. *Victor Talking Mach. Co.*, 213 U.S. 301, 320 (1909). As such, a patent on a combination of components does not confer rights over the individual components themselves; conversely, a patent limited to an individual component cannot be equated to a patent on the

combination. *Mercoid Corp.* v. *Mid-Continent Inv. Co.*, 320 U.S. 661, 667-68 (1944) ("[T]he combination is the invention, and it is distinct from any of [the individual parts]."). The sale of the patented components to petitioners thus was not a sale of the patented systems.[9]

2. The Court has repeatedly held, in accord with this principle, that the unconditional sale of a patented article exhausts patent rights *only* in the article itself. See, *e.g.*, *United States* v. *Gen. Elec. Co.*, 272 U.S. 476, 489 (1926) (citing *Keeler* v. *Standard Folding Bed Co.*, 157 U.S. 659, 666 (1895); *Adams*, 84 U.S. at 456; *Mitchell* v. *Hawley*, 83 U.S. (16 Wall.) 544, 548 (1872)). By placing a patented article into the stream of commerce, without condition, the patent holder signals that it relinquishes its right under patent law to exclude others from "using" or "selling" that particular article. *Motion Picture Patents Co.* v. *Universal Film Mfg. Co.*, 243 U.S. 502, 515-16 (1917). Through the unconditional sale, the patent holder has severed its statutory right to claim exclusive dominion and control over that patented article, and purchasers of that article are not bound to respect any restrictions that the patent holder seeks to impose on the use or sale of that article because of the patent thereon.

---

[9] The United States agrees, acknowledging that "[t]he sale here was not of an article covered by th[e] patents [in suit], but rather merely of a component of the patented systems and methods." Gov. Br. 31. Nevertheless, throughout the rest of its brief and in the question presented, the United States incorrectly frames the case as involving a restriction on the article sold. *Id.* at I ("[w]hether a patentee, having authorized the sale of *the particular article* at issue, can nonetheless invoke patent law to remedy a violation of a purported restriction on the purchaser's right to use *the article* for its only reasonable use") (emphasis supplied).

Boston Store of Chi. v. *Am. Graphophone Co.*, 246 U.S. 8, 23, 25-26 (1918). The article has "passed beyond the scope of the patentee's rights." *Gen. Elec.*, 272 U.S. at 489.

But exhaustion is an inherently limited doctrine. The exhaustion of patent rights that results from an unconditional sale of an article does not extend beyond the particular article itself. For example, no case from this Court has ever held that a person who purchases an article through an unconditional sale thereby gains the right under the patent to "make" or to "import" additional copies of that article. Cf. *Cotton-Tie Co.* v. *Simmons*, 106 U.S. 89, 93-94 (1882) (purchasers of patented cotton-bale ties were not permitted to use discarded pieces of purchased ties to construct new ties). This stems in part from the statutory character of the patent grant, which confers discrete and independent exclusive rights to make, use, offer for sale, sell, or import the patented invention. 35 U.S.C. § 154(a)(1). A contrary result would destroy the very point of granting exclusive rights to "make" the patented article – if the first sale of one unit of the patented invention operated to authorize subsequent manufacture of copies of the patented invention, there would be no patent "exclusivity" or incentive delivered from the patent grant.

Because unconditional conveyance of an article manufactured under one patent does not exhaust the patent holder's right to prevent the "making" of additional articles by the purchaser under that patent, it certainly follows that conveyance does not exhaust the patent holder's right to prevent the "making" of a *different* patented item, such as a machine that incorporates the article as one of its components. The unconditional sale of a patented

article may signal that the holder relinquishes certain patent rights in the article itself, but it does not relinquish any rights arising out of other, independently granted patents claiming different inventions, even if those patents employ the article. See *Aro Mfg. Co.* v. *Convertible Top Replacement Co.*, 377 U.S. 476, 497 (1964); *Cotton-Tie*, 106 U.S. at 93-94. Collapsing separate patents in this way would usurp the PTO's authority and expertise in deciding when and if a combination invention represents a patentable advance over one or more components used to make that invention. It would also violate the legislative presumption that each invention for which a patent is issued has real world value independent of other inventions that may also be patented. See 35 U.S.C. § 282; *Brenner*, 383 U.S. at 528-36 (each invention issued as a patent must have utility). There is absolutely no statutory basis or rationale in law to deem a patent holder's rights in one patent exhausted by the sale of a separately patented article.

This conclusion does not change, as petitioners assert, merely because the patented article's sole use is in a separate patented system.[10] Pet. Br. 33-34, 39-

---

[10] Contrary to petitioners' assertions, *see* Pet. Br. 39, the components have more than one economically viable use. Petitioner Quanta, for example, is an overseas firm, and its overseas sales of personal computers practicing LGE's United States patents in suit do not violate United States law. *See* A608-09; A627-28; A755-76; A800-01; A3743; A4069-70. Moreover, petitioners have conceded that Intel could disable the features of the components to prevent infringement of LGE's systems patents when those components were combined with other non-Intel components. *See* A3578.120 (Chen Decl. ¶ 15). In other words, petitioners could have purchased components from Intel that, when used in computer systems with non-Intel parts, would not have infringed LGE's systems patents. These

40. The exhaustion doctrine does not consider whether the article may be utilized in other patented inventions or whether those uses are profitable ones. Nor does it consider, as petitioners suggest, whether the purchased article is the "heart" of a separate patented combination or represents the true "advance in the art" of that combination. *Mercoid*, 320 U.S. at 667; cf. *Special Equip. Co.* v. *Coe*, 324 U.S. 370, 375-76 (1945) (separate patents could be issued for combination and sub-combination, even though the only economically viable use of sub-combination is as part of combination). Rather, its application is premised on the limited principle that a patent gives specific rights to a particular defined invention and the unconditional sale of an article that meets the limitations of that defined invention relinquishes certain of those patent rights. *Motion Picture*, 243 U.S. at 515-16.

The effect of a sale of an article on *separate* patents (those not embodied by the article) is addressed not by the exhaustion doctrine, but by the conceptually distinct principle of implied license. That principle presumes that, when the holder of a patent on a system or process unconditionally conveys an article (patented or unpatented) that can be used only in practicing that system or process, the holder has granted the purchaser an implied license to practice that patent. *B.B. Chem. Co.* v. *Ellis*, 314 U.S. 495, 497 (1942) (citing *Leitch Mfg. Co.* v. *Barber Co.*, 302 U.S. 458 (1938); *Carbice Corp. of Am.* v. *Am. Patents*

---

facts eliminate any possible basis for petitioners to assert, even under their own theory, that the sale of these components exhausted LGE's rights in the patented systems (or gave rise to an implied license). *See, e.g.*, *Univis*, 316 U.S. at 252 (implied license will generally be recognized only when the article sold has no non-infringing uses).

Dev. Corp., 283 U.S. 27 (1931)). Although the concept of implied license serves as an effective adjunct to the exhaustion doctrine, protecting parties' reasonable expectations that the purchase of an article generally authorizes the purchaser to practice the system or process in which the article is intended to be used, the two doctrines rest on wholly distinct foundations. The question of whether an implied license under distinct patents has been granted incidental to the sale of an article focuses on the conduct and intent of the parties, to determine whether they could reasonably anticipate that the purchaser would receive a license to practice the separate patented system or process. See *id.* In contrast, exhaustion focuses on the fact of conveyance itself, to determine whether patent rights *in the article sold* were necessarily exhausted as a consequence of the sale. *Motion Picture*, 243 U.S. at 515-16. No agreement or meeting of the minds is presumed in the exhaustion context; rather, the loss of rights occurs as a result of the patent holder's decision to sell the article. *Id.*

These doctrines address separate situations and protect different interests. It therefore makes no sense to merge them, as do petitioners (and the United States), by asserting that the sale of an article exhausts the patent holder's rights in that article (standard exhaustion analysis) *and* the patent holder's rights in any independently patented system in which the article will be used (exhaustion analysis merged with implied license analysis). Pet. Br. 33-34; Gov. Br. 8. In fact, this approach nullifies the very concept of implied license, since under this view the sale of any article to be used in a patented system absolutely exhausts all of the seller's independent

patent rights in that system, negating any need for a license.[11]

Extending the exhaustion doctrine to apply to patents beyond those that claim the article itself also risks a host of absurd and conflicting results. The most obvious of these would occur when the patent for the article and the patent for the system using that article are owned by different entities.[12] Under petitioners' expanded exhaustion doctrine, conveyance of an article exhausts any patent rights associated with that article itself *and* any patent rights associated with a system in which article is used, if that system represents the only economically viable use of the article. Pet. Br. 33-34. When the article patent and the system patent are owned by different entities, petitioners' rule would mean that the holder of the system patent could see its patent rights extinguished without its consent and without any action on its part. The mere fact that the owner of the article patent has sold the product is sufficient, under petitioners' theory, to eliminate the right of the system patent holder to assert its independently granted patent rights to restrict the purchaser from practicing its patent. This result is flatly contrary to the fundamental principle of patent law: that a patent holder is entitled to exclude others from

---

[11] It is ironic that petitioners repeatedly accuse LGE of collapsing these doctrines, Pet. Br. 25-26, when, in fact, it is petitioners that confuse these distinct principles.

[12] This situation could arise, for instance, when a component patent was issued years before the system patent, when the component had a different (now, economically defunct) utility. Or, a single entity that holds both the component patent and the system patent could decide for business reasons to assign its rights under the component patent while retaining its rights under the system patent.

practicing the patented invention. 35 U.S.C. §§ 154(a)(1), 261; *Grant* v. *Raymond*, 31 U.S. (6 Pet.) 218, 241-42 (1832).

This example also demonstrates the fundamental difference, which petitioners confuse, between the concepts of exhaustion and contributory infringement. Pet. Br. 34; see Gov. Br. 31. An entity that transfers one of many components designed to function in a patented system may be deemed liable for contributory infringement because the entity has actively assisted the purchaser in practicing the system patent without authorization from the patent holder. *Metro-Goldwyn-Mayer Studios Inc.* v. *Grokster, Ltd.*, 545 U.S. 913, 930-33 (2005) (citing 35 U.S.C. § 271(c)). Other parties can likewise be held liable as contributory infringers if they sell other, distinct components of the same system. *Id.* Under petitioners' theory, however, the first lawful conveyance of any component exhausts the patent holder's rights in the patented system. The purchaser of any of the components can therefore practice the patented system with impunity, without infringing the patent holder's rights. And, since there is no direct infringement in this situation, there can be no contributory infringement. *Aro*, 377 U.S. at 483 ("[I]t is settled that if there is no *direct* infringement of a patent there can be no *contributory* infringement . . . ."). The broad exhaustion doctrine advanced by petitioners would largely nullify the concept of contributory infringement.

The exhaustion doctrine should be applied, as it has always been, to exhaust only those patent rights in the article itself. Conveyance of a patented article cannot exhaust rights in patents other than the rights that inhere in the article itself.

2. In arguing to the contrary, petitioners misread several of this Court's prior decisions, most notably *United States* v. *Univis Lens Co.*, 316 U.S. 241 (1942). In *Univis*, the Court held that a patent holder that authorized its affiliate to manufacture and sell patented lens blanks, which were then ground and polished under the *same patent* by separately licensed retailers, could not enforce express restrictions under licensing agreements with the retailers on the prices at which the finished lenses were sold. *Id.* at 243-45, 248-54.

Central to the Court's holding was the conclusion that the lens blanks and the finished lenses were the same article for purposes of patent law and that the sale of the lens blanks had the same effect as a sale of the finished lenses for purposes of exhaustion. The Court found that the lens blanks "embodie[d] essential features of the patented device" and were themselves "within the protection of [the] patent." *Id.* at 249-51. The blanks constituted the entire physical structure of the patented article and were neither distinctly different nor independent from the finished lenses. See *id.* (the lens blanks "embodie[d]" the patented invention).

The modifications made by the retailers to the shape of the blanks, although necessary to practice the patent "fully" and invest the blanks with the "utility" of the patented invention (*i.e.*, as finished lenses), did not alter the basic nature of the manufactured articles and were not capable of being awarded independent patent rights. See *id.* at 248-49. Because the lens blanks embodied the patented invention itself, their authorized sale exhausted patent rights in that patented invention, regardless of the subsequent modifications. The Court therefore held that the patent holder had no right to control the

prices at which either the unfinished blanks *or* the finished lenses could be resold. *Id.* at 251 ("[By selling the article, the patent holder] has thus parted with his right to assert the patent monopoly with respect to it and is no longer free to control the price at which it may be sold *either in its unfinished or finished form.*") (emphasis supplied).

The converse situation is presented in this case. The components sold by Intel do not constitute the entire physical structure of the patented systems. Only by combining those components with other, separate devices are the patented systems practiced. In other words, the systems that are the subject of the patents in suit necessarily and legally require patentably distinct elements and steps to be performed with the components to yield these independently patented inventions. As such, the components cannot reasonably be said to "embod[y] essential features" of the patented systems, as both lower courts acknowledged, which should be dispositive. See *Berenyi* v. *Dist. Dir.*, 385 U.S. 630, 635-36 (1967) (under "two-court rule," the Court generally will not "undertake to review concurrent findings of fact by two courts below") (quotations omitted).

Recognizing the gaping hole in their reliance on *Univis*, petitioners ask the Court to ignore the problem. They assert that, by failing to respond to a sentence in the petition for certiorari asserting that "the chips sold by Intel clearly embraced the 'essential features' of the asserted [systems] patents," LGE has somehow conceded this point. Pet. Br. 6. This is plainly wrong. LGE's brief in opposition expressly referenced the Federal Circuit's contrary finding that "[the] sale involved a component of the asserted patented invention, not the entire patented

system," Pet. 5a; see Resp. Br. 9, and the bulk of the brief was devoted to defending the Federal Circuit's holding, *e.g.*, *id.* at 3, 4, 12, 17, 21.

That analysis was correct. LGE's patented systems are not practiced by modifying the component; rather, those patents are practiced only when the component is combined in certain ways with other distinct articles not contained within the component sold. The *Univis* Court was careful to stress that only a single patent was at issue – the one that described the manufacturing and finishing of the lens blanks – and that "[w]e therefore put to one side questions which might arise if the finisher of a particular lens blank utilized the invention of some patent other than the patent which was practiced in part by the manufacture of the blank." 316 U.S. at 248. That of course *is* this case, and as the issue cannot be put aside, it should be laid to rest. Exhaustion from the sale of one patented component does not extend to the practice of a different patented system.

The Court in *Univis* bolstered its exhaustion analysis with a discussion of implied license. It found that the lens blanks had been conveyed with the clear intention that the retailers would finish the blanks, giving rise to "a license [for the retailers] to practice the final stage of the patent procedure." *Id.* at 249. It further noted that "[n]o one would doubt that if the patentee's licensee had sold the blanks to a . . . finishing retailer, without more, the purchaser would not infringe by grinding and selling them." *Id.* at 251. That the retailers would have been allowed under the implied license to practice the patent freely, without the price restriction, made the refusal to enforce the price controls in the express licensing agreements all the more reasonable.

But, although the Court used implied license to support its conclusion, it is clear that the implied license analysis was distinct from the exhaustion analysis. The Court on several occasions explicitly distinguished between the two concepts. *E.g.*, *id.* at 249 ("Sale of a lens blank by the patentee or by his licensee is thus in itself both a complete transfer of ownership of the blank, which is within the protection of the patent law, *and a license to practice the final stage of the patent procedure.*") (emphasis supplied). And, importantly, the Court distinguished *United States* v. *General Electric Co.*, 272 U.S. 476 (1926), a case upholding the right of patent holders to enforce price controls against manufacturing licensees. *Id.* at 488-89. The holding of *General Electric* supported the enforceability of the price controls imposed on the retailers in *Univis*, because the retailers were practicing the patent under license from the patent holder (and, indeed, the patent holder so argued in its brief, see Br. for Appellees 36, *Univis*, 316 U.S. 241 (filed Apr. 7, 1942) (No. 855)). However, the Court found *General Electric* to be inapplicable because, by the time the retailers in *Univis* practiced the lens patent, the patent holder had already vended an article that "embodie[d] essential features of the patented invention" and thereby exhausted its right to restrict subsequent sales prices. *Univis*, 316 U.S. at 251.

The holding in *Univis* thus represents standard exhaustion doctrine: the unconditional sale of an article that embodies a patent exhausts certain rights arising from the patent that claims that article. *Univis* did not address a situation involving more than one patent, like this case, and does not stand for the position advanced by petitioners that the sale of a patented article exhausts not only patent rights in

the item sold, but also patent rights in separate innovations, such as the patented systems at issue, that incorporate the article sold.

3. This conclusion finds strong support in statutory provisions enacted subsequent to *Univis*. In 1952, Congress passed 35 U.S.C. § 271(d)(2), which states that "[n]o patent owner otherwise entitled to relief for infringement . . . shall be denied relief . . . by reason of his having . . . authorized another to perform acts which if performed without his consent would constitute contributory infringement of the patent." *Id.* This provision flatly declares that a patent holder's decision to license the sale of a component with no significant use except to infringe the patent holder's patent rights does *not* thereby eliminate the patent holder's right to sue the purchaser for infringement, if the purchaser uses the component in derogation of the patent holder's rights. In other words, a patent holder shall not be "denied relief" in this setting if he or she is "otherwise" entitled to it. *Id.*

Petitioners, however, ask this Court to deny LGE its right to relief arising from the infringement of LGE's systems patents solely because LGE licensed Intel to make and sell certain components that it argues would constitute contributory infringement of these patents if unlicensed. But the congressional policy set forth in § 271(d)(2) states that the licensing arrangement between LGE and Intel is not an improper extension of rights conferred by LGE's patents on systems and may not be used to deprive LGE of its right to relief for petitioners' direct infringement. Congress has made clear that, by allowing Intel to sell its components, LGE did not relinquish its right to enforce its systems patents against petitioners through an infringement action.

An example illustrates this point. If LGE had never licensed Intel to practice its patented systems but Intel nevertheless purported to sell to petitioners the right to practice those patents as part of the sale of the components, there would be no question that LGE could sue Intel for contributory infringement and petitioners for direct infringement. *Gen. Talking Pictures Corp.* v. *W. Elec. Co.*, 305 U.S. 124, 127 (1938); see *Grokster*, 545 U.S. at 930-33. And, if LGE subsequently settled its contributory infringement claim against Intel (by license or otherwise), there would still be no question that LGE could maintain its separate claims against petitioners for infringement. 35 U.S.C. § 271(d)(2). The situation here is no different, because a license agreement entered into *before suit* has the same effect as a settlement agreement entered into *during* suit: both constitute a patent holder's agreement not to sue another for a particular infringement of specific patent rights in return for consideration. *Gen. Talking Pictures Corp.* v. *W. Elec. Co.*, 304 U.S. 175, 181 (1938) ("[A] non-exclusive license[] amount[s] to no more than 'a mere waiver of the right to sue.'"); *Gen. Elec.*, 272 U.S. at 489 ("[A] license[] giv[es] the licensee no title in the patent and no right to sue at law in his own name for an infringement.").

4. Petitioners' proposed rule of law would have a number of harmful market effects. It would force patent holders to demand that manufacturing licensees determine and pay the full value of the rights to all combinations and processes in which a component is to be used and to build that cost into the component's price, rather than negotiate a limited price for the patent rights in the component and allow separate negotiations between the patent holder and downstream purchasers of the component

who wish to practice the separately patented systems. It is these downstream purchasers – the companies that will actually use the component to manufacture the patented systems – that will have the best information about the real economic value of the patent rights. Indeed, they may be willing to pay different prices to practice the patents depending on the particular needs of their business. Nevertheless, petitioners' approach would demand that the full and final value of these patents be determined at a single point in the distribution chain, where the relevant information simply does not exist. That is not only economically unjustified, but is a prescription for an inefficient marketplace, where freeriding would abound.

For example, many electronic products include components and subcomponents made by independent entities in a vertical manufacturing chain. The first level in most cases is the microprocessor or other chip manufacturer, while intermediate levels may involve subassemblies that include microprocessors, and the final level will result in the making of the ultimate product, such as the computer or cellular phone. Currently, the owner of a patent on a computer or cellular phone will license a microprocessor manufacturer to supply that component in a license that does not exhaust the patent on the combination (either the subassembly or the computer or cellular phone). Thus, the microprocessor manufacturer does not infringe by practicing the patent, but any purchasers of the microprocessor who wish to make the subassemblies or the ultimate product must obtain licenses from the patent holder to practice the patents involved in the combinations. These arrangements, now so common

and beneficial in the marketplace, would be negated by petitioners' proposed rule of law.

These market failures would necessarily result in a stifling of innovation. Inventors could no longer be assured of a reasonable return on the substantial time and energy invested in developing a novel product or system. They would, in fact, have a positive disincentive to withhold any new idea from the marketplace, to ensure that they do not exhaust their rights in the idea before they ascertain all of the uses to which it might be put and the full value of those uses. The practice of licensing an invention to a company for further development and marketing – a practice that has led to innumerable useful innovations – would end: inventors would be unwilling to part with an invention with potentially profitable uses without a substantial up-front payment, and companies would be unwilling to make a substantial up-front payment without proof of profitability. Petitioners' proposed rule, far from advancing the goals of patent law, would impede its fundamental purpose: "to promote the Progress of Science and useful Arts." U.S. Const. art. I, § 8.

No "contracting strategies" could provide an answer to these problems or serve as an effective substitute for the protection of patent law. Pet. Br. 52; see Br. of IBM 14-26 (arguing that restrictions may be enforced only through written agreements with purchasers). There is simply no way that a patent holder could, when licensing manufacturing and vending rights to another entity, identify all potential purchasers of the article or quantify the value of the uses to which the article will be put. And, of course, following sale, purchasers of the article would have no incentive to enter into separate licensing agreements with the patent holder, since (under

petitioners' theory) they would already be absolutely authorized to practice any patents in which the article will be used. Nor would contract law provide an equally effective remedy to the patent holder in the event of a breach: the patent holder would be entitled to monetary damages but, unlike under patent law, would not have a strong entitlement to injunctive relief. The infringing items thus would continue to be sold to consumers and used in derogation of the patent holder's rights.

The rule proposed by LGE would not render exhaustion "optional" or burden consumers or the marketplace. Br. of Dell, et al. 12-22; see Br. of Comp. & Comm. Ind. Ass'n 4-14. The sale of an article would continue under LGE's approach – which also has been this Court's and the Federal Circuit's approach – to exhaust the patent holder's right to control resale of that article. Patent holders still would not be allowed to impose common law restraints on alienability, and downstream purchasers still would enjoy full authority to use and sell the articles that they purchase. Likewise, the reasonable expectations of parties to a transaction would continue to be protected. The purchaser of an article to be used in a patented system would still be "authorized" to practice that system, assuming the circumstances of the transaction indicate that the parties understood that a license would be implied. LGE proposes nothing more than that this Court follow its traditional approach to patent law, including the distinction between exhaustion and implied license, which has enabled the market to function effectively and innovation to flourish for the last 200 years.

To be sure, under LGE's approach petitioners would not receive the windfall of paying for an

inexpensive item and then selling vastly more expensive products practicing patents that are completely different. But it would be passing strange for this Court to disrupt the entire market for patent licensing solely to reward freeloading manufacturers. Only a clear statement of congressional intent could justify such a bizarre result, and § 271(d)(2), if anything, declares the opposite.

B. A Patent Holder May Restrict Its Licensee's Authority To License Customers To Practice Its Patents.

1. The sale of components to petitioners did not exhaust LGE's patent rights in the separate systems patents. At most, that sale might have given rise to an implied license for petitioners to practice those separate patents. See *Univis*, 316 U.S. at 249-50. But the circumstances of this case, as the lower courts found (and petitioners do not dispute), cannot support a finding of an implied license. Moreover, even if a license could be implied in these circumstances (notwithstanding the contrary, unchallenged findings of the lower courts on this issue), that license was restricted to allowing petitioners to practice the patents with only Intel parts.

Precedents of this Court uniformly confirm that restrictions on a manufacturing licensee are wholly enforceable if they reasonably relate to the rights secured under patent law. This Court noted in *General Talking Pictures Corp.* v. *Western Electric Co.*, 305 U.S. 124 (1938), that "[t]he practice of granting licenses for a restricted use is an old one, [and,] . . . [s]o far as it appears, its legality has never been questioned." *Id.* at 127; see *Gen. Elec.*, 272 U.S. at 489-90; *Bement* v. *Nat'l Harrow Co.*, 186 U.S. 70, 93-94 (1902); *Mitchell* v. *Hawley*, 83 U.S. (16 Wall.)

544, 548 (1872); *Rubber Co.* v. *Goodyear*, 76 U.S. (9 Wall.) 788, 799 (1869). These restrictions, unlike those in cases such as *Motion Picture Patents Co.* v. *Universal Film Manufacturing Co.*, 243 U.S. 502 (1916), and *Henry* v. *A.B. Dick Co.*, 224 U.S. 1 (1912), *overruled in part by* 243 U.S. 502 (1916), are imposed *prior* to sale of the manufactured article and therefore do not implicate the exhaustion principles on which petitioners rely. Pet. Br. 21-23. Petitioners themselves concede, as they must, that "licenses granted to manufacturing licensees can carry enforceable conditions." *Id.* at 28.

Given this concession, and even assuming (contrary to the record below) that an implied license was granted to petitioners through the sale of the components from Intel, petitioners (as manufacturing licensees) were prohibited from practicing the systems patents with non-Intel parts. The agreements between LGE and Intel prohibited Intel from licensing its customers to practice the patented systems with non-Intel parts, and petitioners received express notice that Intel could not convey such a license to them. The cases cited above demonstrate that this restriction was lawful; indeed, petitioners do not challenge its validity. Thus, any license that petitioners *could* have received would have been limited to allowing them to practice the patents with exclusively Intel-manufactured parts.

Petitioners offer no rejoinder to these points other than to claim that they are not "licensees" of LGE or Intel but are, instead, purchasers in due course of the patented systems. Pet. Br. 28. But this assertion merely begs the question of what did they buy. The articles that Intel sold to petitioners are the microprocessors and chipsets. Those components did not "embody" LGE's independently patented systems,

and the sale of those components cannot be equated with a sale of such systems, particularly in light of the existence of independent patents on the systems. See, *e.g.*, *Mercoid*, 320 U.S. at 667-68. Petitioners purchased *not* the patented systems, but only the components that would be used in those technologies.

In light of this, the only way that petitioners could have obtained rights under LGE's systems patents was through an implied license. But, as discussed, petitioners could not have received a license to practice the patented systems with non-Intel parts, because Intel could not give such a license and petitioners knew that they could not receive such a license from Intel. Petitioners' practice of those patents with non-Intel parts therefore infringes LGE's patent rights.

2. This outcome makes legal and economic sense. The Patent Act grants exclusive rights to practice the patent, allowing the patent holder to bar others from doing so "without authority." 35 U.S.C. §§ 154(a)(1), 261, 271(a). The Act does not restrict the patent holder's freedom to convey those exclusivity rights to different entities, with partial payments negotiated with each entity. *Gen. Elec.*, 272 U.S. at 489.

The prices negotiated at each level of a transaction will, of course, be affected by the rights that are sold or purchased. So, for example, if Intel had been authorized to license its customers to combine Intel components with those from other companies to make the patented systems, the sale price of the components with that license would have been higher, reflecting that fact. As it was, Intel's customers knew that they were not purchasing a license to practice LGE's patented systems with non-Intel parts and could not practice those patents without obtaining a separate license from LGE. That

made the components less valuable than they otherwise would have been, a fact no doubt reflected in their price.[13]

The Government itself has recognized the efficiency benefits of licensing restrictions. U.S. Dep't of Justice & FTC, *Antitrust Guidelines for the Licensing of Intellectual Property* 5 (1995) ("Field of use, territorial, and other limitations on intellectual property licenses may serve procompetitive ends by allowing the licensor to exploit its property as efficiently . . . as possible."); cf. Frank H. Easterbrook, *Contract and Copyright*, 42 Hous. L. Rev. 953, 957 (2005) ("Markets are *much* better than judges at sifting efficient from anticompetitive practices."). The ability of patent holders to convey limited licenses of patent rights, based on individual negotiations over the value of those rights, reduces transactional costs

---

[13] Petitioners have implied that LGE obtained the full value of its patented systems in its transactions with Intel, *see* Pet. Br. 8-9, 49-50, 52-53, suggesting that LGE would be "double-dipping" if Intel's customers were required to pay to obtain a license as well. There are at least two problems with this assertion. First, the record does not support any claim that LGE received full value for the patented systems. To the contrary, the record shows that LGE and Intel intended to preserve LGE's ability to require separate licenses from Intel's customers under the systems patents. *See supra* note 6 (no license is granted to Intel's customers). Second, as discussed, there is simply no way by which a patent holder, when licensing a manufacturer to produce and sell patented components, could reasonably determine the value of a separate patented system to different downstream purchasers or rationally allocate the value of that system as part of the price of the component license. There is thus no ground (absent a concession by the seller) to deem the amount exchanged for the component license to represent the full value of the separate patented system or amounts subsequently exchanged for licensing rights under those separate patents a "double" recovery.

and increases transparency, by permitting parties to tailor their licenses explicitly to their needs and limit the risk of litigation regarding the scope of the license. Patent holders such as LGE should be allowed, through their licensing agreements, to manage the ways in which their licensees practice under and profit from their patents.

II. PATENT HOLDERS MAY IMPOSE REASONABLE CONDITIONS ON THE SALE OF ARTICLES.

1. As discussed, the sale of the patented components to petitioners cannot exhaust LGE's rights under the separate patents for the systems. *Supra* at 19-24. Nor did the sale of the components give rise to an implied license to practice the patented systems – much less a license to practice those patents with non-Intel parts. *Supra* at 35-37. The judgment below should be affirmed on these grounds.

But, even assuming (incorrectly) that the sale of these components somehow constituted a sale of the patented systems of which the components ultimately became a part, petitioners are still barred from practicing the systems patents with non-Intel components. That sale was accompanied by express notice that petitioners would not be allowed to practice the systems patents with non-Intel components. This independent restriction on the sale of the patented systems is valid and enforceable under patent law, for two reasons.

First, petitioners could not have obtained from Intel the right to practice the patented systems with non-Intel components because Intel never owned that property interest. "[N]o one can convey . . . any better title than he owns." *Mitchell*, 83 U.S. at 550. This Court held in both *Mitchell* and *Talking Pictures* that

the purchaser of an article from a manufacturing licensee takes the article subject to any restrictions that were imposed on the licensee by the patent holder, whether or not the purchaser has notice of those restrictions. *Talking Pictures*, 305 U.S. at 127; *Mitchell*, 83 U.S. at 548. The licensing agreements between Intel and LGE expressly prohibits computer system manufacturers from practicing the patented systems with non-Intel parts. *Supra* note 6 (quoting agreements). The patent rights that petitioners obtained through Intel therefore could not have included this right. See *Mitchell*, 83 U.S. at 548. Indeed, this case provides an even stronger basis for application of this rule, since petitioners admittedly had notice that the sale was subject to this restriction.

Petitioners mischaracterize the holding in *Mitchell* as based on the Court's finding that the manufacturing licensee "had no authority to sell" the article. Pet. Br. 18; see Gov. Br. 17 n.7. To the contrary, the licensee in *Mitchell* was granted express authority under the license agreement to manufacture and convey the article for use by others, and it did so in full compliance with that agreement. 83 U.S. at 548-49. The Court enforced the restriction (precluding the buyer from using the patented hat felting machine after expiration of the original term of the patent) not because the conveyance was "unauthorized" – it clearly was authorized – but because the manufacturing licensee lacked any property interest in using the article in the restricted manner (*i.e.*, after expiration of the original patent term) and the buyer was therefore subject to the same restriction on use. *Id.* at 549-50.

Petitioners' reliance on *Univis* to refute this conclusion is also, once again, unavailing. The

licensing agreement under which the affiliate in *Univis* sold the lens blanks did not restrict the affiliate's right to use or sell the blanks. 316 U.S. at 243-45. The Court emphasized that the patent holder and the affiliate could be treated "as though they were a single corporation," meaning that the affiliate had full rights to use and sell the blanks and thus could (and did) convey those full rights to the retailers that purchased the articles. See *id.* at 243, 249-51. *Univis* did *not* state that a holder of a product patent cannot restrict use of the product through agreements with manufacturing licensees. Instead, it merely applied standard exhaustion concepts, recognizing that sale of an article *by the patent holder* generally exhausts certain rights under that article's patent.

In no case has this Court refused to enforce a reasonable restriction on a patented article when that restriction passed through the chain of ownership from the manufacturing licensee to the purchaser, as happened here. See *Talking Pictures*, 305 U.S. at 127 (approving of such restrictions); *Mitchell*, 83 U.S. at 548 (same). The opinions cited by petitioners as stating a contrary rule are inapposite, as they involve sales of articles either by the patent holder, *Motion Picture*, 243 U.S. at 515-16; see *Univis*, 316 U.S. at 249-51; *Henry*, 224 U.S. at 23-35, or by a manufacturing licensee that possessed full rights to sell the manufactured articles without any restriction as to post-sale use, *Keeler* v. *Standard Folding Bed Co.*, 157 U.S. 659, 666 (1895) (licensee subject to restriction on where it could sell a patented article was under no restriction as to conveyance of right to use the article); *Hobbie* v. *Jennison*, 149 U.S. 355, 362-63 (1893) (same); *Adams*, 84 U.S. at 456 (same). In all of those cases, unlike *Mitchell* and *Talking*

Pictures, the purchaser was able to secure from the seller full rights in the article, free of any restriction that the patent holder might wish to assert. 3 W. Robinson, *Treatise on the Law of Patents* § 824, at 617-24 (1890) (under *Mitchell* and other cases, patent holder can forestall loss of patent rights in a licensee's sale of product by notifying purchaser of restrictions on rights conveyed); Thomas Reed Powell, *The Nature of a Patent Right*, 17 Colum. L. Rev. 663, 670-71 (1917) (same).

In contrast, Intel did not possess full patent rights in the patented systems. The licensing agreements with Intel expressly prohibited computer system manufacturers from practicing those patents with non-Intel parts. This restriction was reasonable and enforceable, as petitioners apparently concede. See Pet. Br. 28. And, through their purchase from Intel, petitioners took the systems subject to that restriction. *Talking Pictures*, 305 U.S. at 127; *Mitchell*, 83 U.S. at 548. Petitioners are, for that reason, prohibited from practicing those patents with non-Intel parts.

Second, notwithstanding this inherent limitation on Intel's patent rights, the restriction imposed on petitioners by LGE is independently valid under standard principles of patent law. Holders of a patent, like holders of any property, can sell distinct sticks from their bundle of property interests without losing the remainder. *E.g.*, *Gen. Elec.*, 272 U.S. at 489-90. In other words, they may impose reasonable conditions on sale of a patented article, so long as those conditions reasonably relate to the patent rights retained by the patent holder following the sale. *Bement*, 186 U.S. at 91 ("[T]he rule is, with very few exceptions, that any conditions which are not in their very nature illegal with regard to this kind of

property [the patent right], imposed by the patentee and agreed to by the licensee for the right to manufacture or use or sell the article, will be upheld by the courts."). In particular, even assuming that the sale of an article divests the patent holder of the right to claim continued dominion over the "selling" or "use" of that article, *Motion Picture*, 243 U.S. at 515-16, the sale cannot be said to exhaust the patent holder's separate patent right to control the "making" of the article, *Cotton-Tie*, 106 U.S. at 93-94. See 35 U.S.C. § 154 (patent holder may exclude others from "making, using . . . or selling" the invention).

All of the restrictions that this Court has previously refused to enforce under the exhaustion doctrine, in the line of cases running from *Adams* through *Aro*, involved conditions that related to the selling or use of the patented article. They dealt with price controls, *United States* v. *Masonite Corp.*, 316 U.S. 265, 277-82 (1942); *Univis*, 316 U.S. at 251-52; *Boston Store*, 246 U.S. at 25-26, geographic or temporal sales limitations, *Keeler*, 157 U.S. at 666; *Hobbie*, 149 U.S. at 362-63; *Adams*, 84 U.S. at 456, and tying arrangements with unpatented products, *Aro*, 377 U.S. at 497; *Motion Picture*, 243 U.S. at 513-14; cf. *Henry*, 224 U.S. at 23-35 (patent owner could impose tying restrictions on purchasers of the patented machine).[14] These restrictions sought to extend the

---

[14] Although petitioners assume that LGE's argument somehow rests on *Henry* v. *A.B. Dick Co.*, 224 U.S. 1 (1912), devoting several pages of their brief to that decision, Pet. Br. 21-23; *see* Gov. Br. 13, in fact *Henry* is irrelevant to LGE's position. The restriction that the Court approved in *Henry*, and later rejected in *Motion Picture*, was a tying arrangement between patented and unpatented articles. 224 U.S. at 23-24. This condition, like those rejected in *Univis* and other cases, represented a restriction on "use" of the article, not one on "making" the article.

patent monopoly beyond the scope of the patent itself, by dictating conditions on the sale or use of the patented article after the patent holder had already exhausted its exclusive rights to "sell" and "use" the article. See *Masonite*, 316 U.S. at 277-82; *Boston Store*, 246 U.S. at 25-26. It was for that reason – and not for some inalienable rule that the sale of an article exhausts *all* patent rights in that article as a matter of law – that the Court held those restrictions could not be enforced under patent law.

The distinction that petitioners and the United States draw between a "condition" and a "restriction," in an effort to explain away decisions of this Court suggesting that only an "unconditional" sale of an article will result in exhaustion, Pet. Br. 18-20 (citing *Mitchell*); Gov. Br. 20-21 (same), is nothing more than a semantic red herring. Whatever myriad definitions may apply to the term "condition," the Court has clearly understood it in patent cases to be synonymous with "restriction." For example, in *Mitchell*, the Court contrasted a situation involving "restrictions" on post-sale use of an article with one in which the sale was "without conditions." 83 U.S. at 548; see *Aro*, 377 U.S. at 497 ("[T]he patentee cannot [after authorizing sale and use of a patented article] *restrict* that use by imposing a *condition* [on purchasers].") (emphasis supplied); *Gen. Elec.*, 272 U.S. at 490 (equating "conditions of sale" with a "restrict[ion]" on the article). Moreover, these arguments incorrectly assume that LGE is levying a direct challenge to the exhaustion doctrine, claiming that exhaustion may *always* be defeated through conditions on sale. In fact, LGE is not challenging the doctrine itself but simply defining its proper scope. While the sale of an article may exhaust the patent holder's rights to enforce restrictions on

"selling" or "using" the article, the doctrine cannot reasonably be extended (as petitioners would) to exhaust the patent holder's rights to preclude others from "making" the article.[15] Accord Br. of Croplife Int'l 17 ("The patent exhaustion doctrine does not address prohibitions against making a product."); Br. of Biotech. Ind. 12 (same).

The restriction in this case falls squarely within the ambit of enforceable restrictions. LGE does not seek to exercise its patent rights to preclude purchasers of its patented systems from "selling" or "using" those systems, even assuming (incorrectly) that the sale of the components somehow represented the sale of the systems. Rather, LGE seeks to limit the manner in which those purchasers can "make" the systems.[16] It

---

[15] That petitioners and the United States misconceive the nature of this case is further demonstrated by their focus on the Federal Circuit's prior decision in *Mallinckrodt, Inc.* v. *Medipart, Inc.*, 976 F.2d 700 (Fed. Cir. 1992). Pet. Br. 30-31; Gov. Br. 18-24; *see* Br. of CU et al. 4-6. In *Mallinckrodt*, unlike this case, the issue involved not the validity of a restriction on "making" the article but, instead, the enforceability of a restriction on "use" of the article. 976 F.2d at 703-04, 708-09. But there is no reason to decide that issue in this case. Even if this Court firmly believes that the Federal Circuit erred in its specific holding in *Mallinckrodt*, the issue presented there is not the one presented here.

[16] The restriction that LGE seeks to enforce is not on "use" of the patented *components*, but on the "making" of the patented *systems*. If LGE was not the owner of the systems patents, it could not claim that petitioners' "use" of the patented components in those systems infringed its patent rights, as the authorized sale of the components exhausted LGE's right to control their post-sale disposition. *See supra* note 6 (acknowledging exhaustion doctrine). It is thus no answer for petitioners to say that they derived no right of "use" from their purchase of the components, in light of their knowledge that separate patents applied to the systems and imposed

can hardly be said that LGE exhausted its exclusive right to make the patented systems – since it neither manufactured the systems nor authorized others to do so with non-Intel parts – or that this restriction is somehow improper or otherwise not within the protection of patent law. Indeed, petitioners have not so argued. That restriction may therefore be enforced through a suit for patent infringement.

2. Lacking any affirmative statutory support for their position, petitioners retreat into suppositions of congressional purpose to challenge the validity of restrictions on intellectual property rights. But, even assuming that legislative intent could serve as an effective guide, see *Conn. Nat'l Bank* v. *Germain*, 503 U.S. 249, 253-54 (1992) (refusing to use legislative history in statutory interpretation), petitioners point to no evidence that Congress intended that the doctrine would be expanded in the manner they propose. Congress has never enacted a provision generally mandating exhaustion in the patent context.

This inaction is hardly evidence that Congress approved of the judicial exhaustion doctrine – much less the sweeping doctrine advanced by petitioners, which no court has ever embraced. See *Alexander* v. *Sandoval*, 532 U.S. 275, 292 (2001) ("It is impossible to assert with any degree of assurance that congressional failure to act represents affirmative congressional approval of the Court's statutory interpretation.") (internal quotations omitted). Indeed, the fact that Congress has chosen *not* to enact an general exhaustion provision in the Patent Act, despite passing such a provision in the Copyright

---

independent restrictions on their ability to practice those patents.

Act, 17 U.S.C. § 109(a), (c) (stating that certain aspects of the copyright are exhausted by the sale of the copyrighted product), suggests that Congress understands how to codify judicial exhaustion doctrines that it approves. This history, if anything, militates in favor of a limited interpretation of the doctrine.

Patent law is inherently a creature of statute. "The [patent] monopoly did not exist at common law, and the rights, therefore, which may be exercised under it cannot be regulated by the rules of the common law." *Gayler* v. *Wilder*, 51 U.S. (10 How.) 477, 494 (1850). The Patent Act grants the patent owner the right "to exclude others from making, using . . . or selling the invention throughout the United States." 35 U.S.C. § 154(a)(1). No limit is placed on this right, and none can be implied. For this reason, the common law presumption against restraints on alienation of property, on which petitioners rely, Pet. Br. 46-48, provides no basis for denying a patent holder's right to impose reasonable conditions on the sale of a patented article.

A recent decision of this Court in an analogous context reveals the peril of adopting a per se rule, of the "first sale/any sale" type offered by petitioners, based on antiquated notions of property. In *Leegin Creative Leather Products, Inc.* v. *PSKS, Inc.*, 127 S. Ct. 2705 (2007), this Court reversed *Dr. Miles Medical Co.* v. *John D. Park & Sons Co.*, 220 U.S. 373 (1911), which had established a per se rule against a manufacturer's agreement with a distributor to set minimum resale prices. 127 S. Ct. at 2713-14. The Court observed that "the rule arose from restrictions removing real property from the stream of commerce for generations," and said that it "should be cautious about putting dispositive weight on doctrines from

antiquity but of slight relevance." *Id.* After highlighting the potential economic benefits and risks of post-sale restrictions, the Court concluded that such restrictions "appear ill suited for per se condemnation." *Id.* at 2718.

Similarly, the common law rule against restraints on alienation should have little relevance, and certainly no dispositive weight, in setting the contours of the judicially established doctrine of patent exhaustion. Patent holders, like owners of any property interest, may place restrictions on the right to use their intellectual property. *Gen. Elec.*, 272 U.S. at 489-90. These restrictions may favor competition in some settings, while stifling it in others. But, as this Court recognized in *Leegin*, the mere possibility of anticompetitive effects cannot justify a per se rule that defines patent rights as more limited than other kinds of property. 127 S. Ct. at 2718 (such a "rule would proscribe a significant amount of procompetitive conduct"); see also *Masonite*, 316 U.S. at 280. Here, of course, there is no allegation that LGE's licensing restriction is anticompetitive or otherwise unlawful.

Nor is there any reason to believe that the rule proposed by LGE "threatens to immunize patent owners for conduct that violates antitrust law." Pet. Br. 50; see Br. of Am. Antitrust Inst. 10-13. LGE does not argue that patent holders may impose any and all conditions on patented articles. Tying arrangements and price controls, as well as other anticompetitive restrictions on the "use" and "sale" of patented articles, would continue to be outside the patent protection and fully subject to antitrust scrutiny. The condition that LGE seeks to enforce is not one that controls sale or use of the patented article – restrictions that lie at the core of antitrust

concerns – but, rather, addresses the "making" of the patented product – a right that lies at the heart of the patent guarantee. See *Cotton-Tie*, 106 U.S. at 93-94. Such a condition poses none of the anticompetitive risks cited by petitioners and in no way constitutes an expansion of the patent protection (or a constriction of antitrust law).

3. In a final bid to sustain their proposed rule, petitioners mischaracterize a condition on a patented article as an "equitable servitude" or some form of contractual limitation on property otherwise conveyed. Pet. Br 46-48. These comparisons are wholly inapposite. Servitudes on personal property are disfavored because a person's common law property rights in an article are tied entirely to that article, meaning that once ownership and possession of the article have been relinquished to a buyer in due course the original owner can no longer assert any property rights in that article and cannot restrict the purchaser's enjoyment thereof. *RCA Mfg. Co.* v. *Whiteman*, 114 F.2d 86, 88-89 (2d Cir. 1940) (L. Hand, J.).[17] Statutory patent rights, in contrast, are tied not to any single article but to the *invention*; they exist independent of the individual article manufactured under the patent. *Bement*, 186 U.S. at 88-91; *Grant*, 31 U.S. at 242; *Pennock* v. *Dialogue*, 27 U.S. (2 Pet.) 1, 17 (1829). The sale of a patented article results in a loss of common law property rights in the article, but does not of itself convey any of the owner's independent rights under the patent (although a limited conveyance of patent rights with

---

[17] *See generally* Zechariah Chafee, Jr., Comment, *Music Goes Round and Round: Equitable Servitudes and Chattels*, 69 Harv. L. Rev. 1250 (1956), *cited in* Thomas W. Merrill & Henry E. Smith, *Optimal Standardization in the Law of Property: The Numerus Clausus Principle*, 110 Yale L.J. 1, 18 n.68 (2000).

respect to the article is generally presumed under the exhaustion doctrine). See *Aro*, 377 U.S. at 497; *Cotton-Tie*, 106 U.S. at 93-94. Restrictions on a patented article therefore do not constitute an "equitable servitude" (or other common law restraint on alienability). They flow not from a contract but, rather, reflect patent rights that the patent holder has chosen not to convey and which exist independent of the article itself.[18]

LGE clearly did not convey all of its patent rights to petitioners. Petitioners purchased the Intel components with express notice that they would be unable to practice the patented systems with non-Intel parts. The only logical inference in this situation is "that the parties negotiated a price that reflects only the value of the . . . rights conferred by the patentee." *B. Braun Med., Inc.* v. *Abbott Labs*, 124 F.3d 1419, 1426 (Fed. Cir. 1997). Nevertheless, petitioners disregarded this restriction, practicing the patented systems in violation of LGE's patent rights and profiting from those violations without compensation to LGE. Petitioners have no grounds, under patent law or otherwise, to defend their misconduct. The restriction was valid, and LGE is entitled to enforce that restriction through a suit for patent infringement.

---

[18] The analogy that petitioners draw, between restrictions on use of a patented article and "divvy[ing] up" the bundle of personal property rights in that article, is particularly inapt. Pet. Br. 47. The right to prohibit otherwise infringing uses of a patented article derives from the privileges granted under the Patent Act, not from the common law incidents of personal property ownership. *See, e.g., Motion Picture*, 243 U.S. at 510-14. Preservation of this right therefore does not reflect retention of partial ownership of the article or of a particular "stick" in the bundle of common law property rights associated with the article.

III. THE EXHAUSTION DOCTRINE DOES NOT APPLY TO METHOD PATENT CLAIMS.

Notwithstanding the foregoing, there is an independent reason why sale of the components to petitioners could not have exhausted all of LGE's rights under the patents in suit. The claims of those patents covered both systems (combinations of components) and methods (processes of using those combinations). And, as both lower courts in this case correctly held, patent rights in method or process claims cannot be exhausted.

Rights in an article patent can be exhausted because those rights are linked with a tangible article. *Motion Picture*, 243 U.S. at 515-16; *Keeler*, 157 U.S. at 666; *Mitchell*, 83 U.S. at 548. After the article is manufactured, there is no further economic benefit in practicing the patent with respect to that article, since the article already embodies the essential aspects of the invention. *Motion Picture*, 243 U.S. at 515-16. The unconditional sale of the manufactured article thus exhausts all remaining value in the patent with respect to that article and eliminates the patent holder's rights to restrict use or sale of the article. *Id.*

The same cannot be said of a process patent. Rights in a process patent are not linked to a tangible article but, rather, represent the means by which a particular task is accomplished or item is produced. *See, e.g.*, *Gottschalk* v. *Benson*, 409 U.S. 63, 68 (1972) (citing *O'Reily* v. *Morse*, 56 U.S. (15 How.) 62, 111-13 (1853)). The sole economic value in the process patent lies in the "use" of the process. A process patent can thus never be "exhausted" through a sale; rather, the patent holder's rights will be transferred to the extent stated in the assignment contract (or license). See *Glass Equip. Dev., Inc.* v. *Besten, Inc.*,

174 F.3d 1337, 1341 n.1 (Fed. Cir. 1999); *Bandag, Inc.* v. *Al Bolser's Tire Stores, Inc.*, 750 F.2d 903, 924 (Fed. Cir. 1984).

The cases petitioners cite in support of a contrary proposition are inapposite. Pet. Br. 35-37. These cases held, in accord with the discussion *supra* at 19-24, that the unconditional sale of an article exhausts the patent holder's rights in *that article* and that restrictions on use of *that article* are unenforceable. *Univis*, 316 U.S. at 249-51; *Ethyl Gasoline Corp.* v. *United States*, 309 U.S. 436, 446, 457 (1940). None of them found, either expressly or by implication, that the patent holder's rights in *separate* patented methods were exhausted. See *Univis*, 316 U.S. at 249-51; *Ethyl Gasoline*, 309 U.S. at 446, 457. And, whatever concession the parties may have made on this point in *Dawson Chemical Co.* v. *Rohm & Haas Co.*, 448 U.S. 176 (1980), it is clear that the Court did not *hold* that a patented process could be exhausted by sale of an article used in that process. *Id.* at 186.

The courts below both held that method claims are not subject to exhaustion. Those holdings should be affirmed, and LGE's infringement claims should be allowed to proceed.

CONCLUSION

For the foregoing reasons, the decision below should be affirmed.[19]

Respectfully submitted,

CARTER G. PHILLIPS*
VIRGINIA A. SEITZ
JEFFREY T. GREEN
JEFFREY P. KUSHAN
RACHEL H. TOWNSEND
QUIN M. SORENSON
SIDLEY AUSTIN LLP
1501 K Street, N.W.
Washington, D.C. 20005
(202) 736-8000

Counsel for Respondent

December 3, 2007 * Counsel of Record

---

[19] As the United States acknowledges, Gov. Br. 30-31, if the Court adopts petitioners' view and holds that the sale of a component *could* exhaust patent rights in an interpedently patented system, remand would be required to determine whether the microprocessors sold to petitioners did in fact have no non-infringing use. *But see supra* note 10 (identifying non-infringing uses). A related issue, which also remains open, is whether the sales of the components took place exclusively outside the United States. *See Jazz Photo Corp.* v. *ITC*, 264 F.3d 1094, 1105 (Fed. Cir. 2001) (foreign sales of patented article do not exhaust patent rights in that article) (citing *Boesch* v. *Graff*, 133 U.S. 697, 701-03 (1890)).

APPENDIX

APPENDIX

FEDERAL STATUTES

17 U.S.C. § 109. Limitations on exclusive rights: Effect of transfer of particular copy or phonorecord

(a) Notwithstanding the provisions of section 106(3), the owner of a particular copy or phonorecord lawfully made under this title, or any person authorized by such owner, is entitled, without the authority of the copyright owner, to sell or otherwise dispose of the possession of that copy or phonorecord. Notwithstanding the preceding sentence, copies or phonorecords of works subject to restored copyright under section 104A that are manufactured before the date of restoration of copyright or, with respect to reliance parties, before publication or service of notice under section 104A(e), may be sold or otherwise disposed of without the authorization of the owner of the restored copyright for purposes of direct or indirect commercial advantage only during the 12-month period beginning on—

(1) the date of the publication in the Federal Register of the notice of intent filed with the Copyright Office under section 104A(d)(2)(A), or

(2) the date of the receipt of actual notice served under section 104A(d)(2)(B),

whichever occurs first.

* * * *

(c) Notwithstanding the provisions of section 106(5), the owner of a particular copy lawfully made under this title, or any person authorized by such owner, is entitled, without the authority of the copyright owner, to display that copy publicly, either directly or

by the projection of no more than one image at a time, to viewers present at the place where the copy is located.

* * * *

35 U.S.C. § 101. Inventions patentable

Whoever invents or discovers any new and useful process, machine, manufacture, or composition of matter, or any new and useful improvement thereof, may obtain a patent therefor, subject to the conditions and requirements of this title.

35 U.S.C. § 154. Contents and term of patent; provisional rights

(a) In general.—

(1) Contents.—Every patent shall contain a short title of the invention and a grant to the patentee, his heirs or assigns, of the right to exclude others from making, using, offering for sale, or selling the invention throughout the United States or importing the invention into the United States, and, if the invention is a process, of the right to exclude others from using, offering for sale or selling throughout the United States, or importing into the United States, products made by that process, referring to the specification for the particulars thereof.

* * * *

35 U.S.C. § 271. Infringement of patent

(a) Except as otherwise provided in this title, whoever without authority makes, uses, offers to sell, or sells any patented invention, within the United States or imports into the United States any patented invention during the term of the patent therefor, infringes the patent.

(b) Whoever actively induces infringement of a patent shall be liable as an infringer.

(c) Whoever offers to sell or sells within the United States or imports into the United States a component of a patented machine, manufacture, combination or composition, or a material or apparatus for use in practicing a patented process, constituting a material part of the invention, knowing the same to be especially made or especially adapted for use in an infringement of such patent, and not a staple article or commodity of commerce suitable for substantial noninfringing use, shall be liable as a contributory infringer.

(d) No patent owner otherwise entitled to relief for infringement or contributory infringement of a patent shall be denied relief or deemed guilty of misuse or illegal extension of the patent right by reason of his having done one or more of the following: (1) derived revenue from acts which if performed by another without his consent would constitute contributory infringement of the patent; (2) licensed or authorized another to perform acts which if performed without his consent would constitute contributory infringement of the patent; (3) sought to enforce his patent rights against infringement or contributory infringement; (4) refused to license or use any rights to the patent; or (5) conditioned the license of any rights to the patent or the sale of the patented product on the

acquisition of a license to rights in another patent or purchase of a separate product, unless, in view of the circumstances, the patent owner has market power in the relevant market for the patent or patented product on which the license or sale is conditioned.

* * * *

35 U.S.C. § 282. Presumption of validity; defenses

A patent shall be presumed valid. Each claim of a patent (whether in independent, dependent, or multiple dependent form) shall be presumed valid independently of the validity of other claims; dependent or multiple dependent claims shall be presumed valid even though dependent upon an invalid claim. Notwithstanding the preceding sentence, if a claim to a composition of matter is held invalid and that claim was the basis of a determination of nonobviousness under section 103(b)(1), the process shall no longer be considered nonobvious solely on the basis of section 103(b)(1). The burden of establishing invalidity of a patent or any claim thereof shall rest on the party asserting such invalidity.

The following shall be defenses in any action involving the validity or infringement of a patent and shall be pleaded:

(1) Noninfringement, absence of liability for infringement or unenforceability,

(2) Invalidity of the patent or any claim in suit on any ground specified in part II of this title as a condition for patentability,

(3) Invalidity of the patent or any claim in suit for failure to comply with any requirement of sections 112 or 251 of this title,

(4) Any other fact or act made a defense by this title.

In actions involving the validity or infringement of a patent the party asserting invalidity or noninfringement shall give notice in the pleadings or otherwise in writing to the adverse party at least thirty days before the trial, of the country, number,

date, and name of the patentee of any patent, the title, date, and page numbers of any publication to be relied upon as anticipation of the patent in suit or, except in actions in the United States Court of Federal Claims, as showing the state of the art, and the name and address of any person who may be relied upon as the prior inventor or as having prior knowledge of or as having previously used or offered for sale the invention of the patent in suit. In the absence of such notice proof of the said matters may not be made at the trial except on such terms as the court requires. Invalidity of the extension of a patent term or any portion thereof under section 154(b) or 156 of this title because of the material failure—

(1) by the applicant for the extension, or

(2) by the Director,

to comply with the requirements of such section shall be a defense in any action involving the infringement of a patent during the period of the extension of its term and shall be pleaded. A due diligence determination under section 156(d)(2) is not subject to review in such an action.

78
57360.
37pgs
35

FILED
DEC 28 2007
OFFICE OF THE CLERK
SUPREME COURT, U.S.

No. 06-937

In the Supreme Court of the United States

QUANTA COMPUTER, INC., QUANTA COMPUTER USA, INC., Q-LITY COMPUTER, INC.,

PETITIONERS,

v.

LG ELECTRONICS, INC.,

RESPONDENT.

ON WRIT OF CERTIORARI TO THE UNITED STATES COURT OF APPEALS FOR THE FEDERAL CIRCUIT

REPLY BRIEF FOR PETITIONERS

TERRENCE D. GARNETT
VINCENT K. YIP
PETER WIED
PAUL, HASTINGS, JANOFSKY & WALKER LLP
515 SOUTH FLOWER STREET
25TH FLOOR
LOS ANGELES, CA 90071
(213) 683-6000

MAUREEN E. MAHONEY
Counsel of Record
J. SCOTT BALLENGER
BARRY J. BLONIEN
MELISSA B. ARBUS
ANNE W. ROBINSON
LATHAM & WATKINS LLP
555 11TH STREET N.W.
SUITE 1000
WASHINGTON, D.C. 20004
(202) 637-2200

Counsel for Petitioners

Additional Counsel Listed on Inside Cover

MAXWELL A. FOX
PAUL, HASTINGS,
JANOFSKY
& WALKER LLP
34 F ARK MORI BUILDING
P.O. BOX 577
12-32 AKASAKA 1-CHOME
MINATO-KU, TOKYO 107-
6034
JAPAN
813 6229 6100

TABLE OF CONTENTS

Page

TABLE OF CONTENTS i

TABLE OF AUTHORITIES ii

ARGUMENT 1

I. A PATENTEE CANNOT ALTER THE SCOPE OF ITS PATENT MONOPOLY BY IMPOSING "CONDITIONS" ON USE OR RESALE FOLLOWING AN AUTHORIZED SALE 1

II. AUTHORIZED SALE OF AN UNFINISHED ARTICLE OR COMPONENT CAN TRIGGER EXHAUSTION UNDER THE *UNIVIS* TEST 7

III. SECTION 271(D)(2) DID NOT OVERRULE *UNIVIS* 12

IV. ANY MODIFICATION OF TRADITIONAL EXHAUSTION PRINCIPLES MUST COME FROM CONGRESS 15

V. PUBLIC POLICY FAVORS THE TRADITIONAL EXHAUSTION DOCTRINE 17

VI. METHOD PATENTS CAN BE EXHAUSTED 28

CONCLUSION 29

TABLE OF AUTHORITIES

Page(s)

CASES

Adams v. Burke,
84 U.S. (17 Wall.) 453 (1873) 5

Alexander v. Sandoval,
532 U.S. 275 (2001) 16

Aro Manufacturing Co. v. Convertible Top Replacement Co.,
365 U.S. 336 (1961) 10

Aro Manufacturing Co. v. Convertible Top Replacement Co.,
377 U.S. 476 (1964) 13, 14

Bement v. National Harrow Co.,
186 U.S. 70 (1902) 26

Boesch v. Graff,
133 U.S. 697 (1890) 4

Chaffee v. Boston Belting Co.,
63 U.S. (22 How.) 217 (1859) 15

Dawson Chemical Co. v. Rohm & Haas Co.,
448 U.S. 176 (1980) 13, 14

Deepsouth Packing Co. v. Laitram Corp.,
406 U.S. 518 (1972) 14

TABLE OF AUTHORITIES—Continued

Page(s)

Dennison Manufacturing Co. v. Ben Clements & Sons, Inc.,
467 F. Supp. 391 (S.D.N.Y. 1979) 3

Director, Office of Workers' Comp. Programs v. Newport News Shipbuilding & Dry Dock Co.,
514 U.S. 122 (1995) 14

Ethicon, Inc. v. United States Surgical Corp.,
135 F.3d 1456 (Fed. Cir.), *cert. denied*, 525 U.S. 923 (1998) 15

Ethyl Gasoline Corp. v. United States,
309 U.S. 436 (1940) 28

General Talking Pictures Corp. v. Western Electric Co.,
305 U.S. 124 (1938) 5

Glenayre Electronics, Inc. v. Jackson,
443 F.3d 851 (Fed. Cir.), *cert. denied*, 127 S. Ct. 582 (2006) 27

Hobbie v. Jennison,
149 U.S. 355 (1893) 5

Illinois Tool Works, Inc. v. Independent Ink, Inc.,
547 U.S. 28 (2006) 1

TABLE OF AUTHORITIES—Continued

Page(s)

In re Aimster Copyright Litigation,
334 F.3d 643 (7th Cir. 2003), *cert. denied*,
540 U.S. 1107 (2004) 3

In re Zurko,
142 F.3d 1447 (Fed. Cir. 1998), *rev'd on other grounds*, 527 U.S. 150 (1999) 16

Keeler v. Standard Folding Bed Co.,
157 U.S. 659 (1895) 5, 15, 20

Lear, Inc. v. Adkins,
395 U.S. 653 (1969) 21

Leegin Creative Leather Products, Inc. v. PSKS, Inc.,
127 S. Ct. 2705 (2007) 1

Lucas Aerospace, Ltd. v. Unison Industries, L.P.,
899 F. Supp. 1268 (D. Del. 1995) 3

Lucent Technologies Inc. v. Gateway, Inc.,
509 F. Supp. 2d 912 (S.D. Cal. 2007) 27

Mallinckrodt, Inc. v. Medipart, Inc.,
976 F.2d 700 (Fed. Cir. 1992) 26

MedImmune, Inc. v. Genentech, Inc.,
127 S. Ct. 764 (2007) 23

TABLE OF AUTHORITIES—Continued

Page(s)

Mercoid Corp. v. Mid-Continent Investment Co.,
320 U.S. 661 (1944) 10, 13

Mitchell v. Hawley,
83 U.S. (16 Wall.) 544 (1873) 18

Motion Picture Patents Co. v. Universal Film Manufacturing Co.,
243 U.S. 502 (1917) 20

Pierce v. Allen B. Dumont Laboratories, Inc.,
297 F.2d 323 (3d Cir. 1961) 9

Public Citizen v. United States Department of Justice,
491 U.S. 440 (1989) 14

State Oil Co. v. Khan,
522 U.S. 3 (1997) 16

United States v. General Electric Co.,
272 U.S. 476 (1926) 26

United States v. Masonite Corp.,
316 U.S. 265 (1942) 15

United States v. Univis Lens Co.,
316 U.S. 241 (1942) 1, 7, 8, 11, 26

United States v. X-Citement Video, Inc.,
513 U.S. 64 (1994) 14

TABLE OF AUTHORITIES—Continued

Page(s)

STATUTES

17 U.S.C. §109(b) 16

35 U.S.C. §261 15

35 U.S.C. §271(d) 13

35 U.S.C. §271(d)(2) 12

OTHER AUTHORITY

Dennis W. Carlton & Jeffrey M. Perloff, *Modern Industrial Organization* (4th ed. 2005) 22, 24

Donald S. Chisum, *Chisum on Patents* (2007) 3

Giles S. Rich, *Infringement Under Section 271 of the Patent Act of 1952*, 35 J. Pat. Off. Soc'y 476 (1953) 13

Richard H. Stern, *The Unobserved Demise of the Exhaustion Doctrine in US Patent Law*, 15 Eur. Intell. Prop. Rev. 460 (1993) 15

Supreme Court Rule 15.2 28

ARGUMENT

I. A PATENTEE CANNOT ALTER THE SCOPE OF ITS PATENT MONOPOLY BY IMPOSING "CONDITIONS" ON USE OR RESALE FOLLOWING AN AUTHORIZED SALE

1. LGE all but abandons the reasoning on which it prevailed below. Several of its *amici* do try to defend the Federal Circuit's "conditional sales" jurisprudence, but only by disregarding the actual reasoning of this Court's exhaustion cases to mischaracterize them as antitrust decisions. PetBr-30–33; USBr-22–23.

Rembrandt argues, for example, that *United States v. Univis Lens Co.*, 316 U.S. 241, 249–52 (1942), "employs broad language in holding that a restriction on resale prices charged by licensees was not made enforceable under the patent law if unlawful under the antitrust laws." RembrandtBr-16. That is precisely backwards: *Univis* first examined whether the patent had been exhausted in order to determine whether the restriction was "excluded by the patent monopoly" from antitrust scrutiny. *Univis*, 316 U.S. at 243, 251.

Amici's argument that the exhaustion precedents have been undermined similarly presumes, incorrectly, that those cases rested on antitrust or misuse principles. Cases like *Leegin Creative Leather Products, Inc. v. PSKS, Inc.*, 127 S. Ct. 2705 (2007), and *Illinois Tool Works, Inc. v. Independent Ink, Inc.*, 547 U.S. 28 (2006), address only how vertical restraints should be analyzed under the antitrust laws—not the scope of the patent monopoly. (Although the respondent in *Independent Ink* had previously been sued for infringement, any exhaustion issues plainly were not before this Court.)

2. LGE and *amici* strain to bring this case within the rule permitting limited-scope manufacturing licenses. But Quanta is a *purchaser*, not a manufacturing licensee within the meaning of the cited cases.

First, LGE argues that exhaustion is inapplicable because this case involves restrictions on the right to "make" the patented combination, not restrictions on the right to "use" or "sell" components purchased through authorized sales. That just ignores the central issue. The articles LGE authorized Intel to sell have no reasonable use other than to be finished into the completed invention. Here, as in *Univis*, there is no coherent distinction between *using* the purchased components and *making* the completed invention—and so the question for decision is whether the purchaser can be recharacterized as a manufacturing licensee to trump exhaustion. *Univis* holds that it cannot. If the sold article embodies essential features of the invention and is inevitably destined to be finished into it, exhaustion attaches. Put differently, LGE just assumes that the invention is not sufficiently "made" to trigger exhaustion until the article is finished and directly infringing. This Court held otherwise half a century ago in *Univis*.[1]

For similar reasons the special issues raised by self-replicating seeds and software are irrelevant here. Restrictions can always be placed on the use or sale of a new second generation of the sold good. But Quanta

---

[1] Some of LGE's *amici* argue that a patentee could authorize a licensee to "sell" the article without conveying to anyone the right to "use" it. Obviously that is inconsistent with traditional exhaustion principles, and LGE does not endorse it.

does not create a new second generation of microprocessors; it just wants to use the physical articles it purchased for their only reasonable use.

In a footnote LGE weakly attacks the district court's finding, undisturbed by the Federal Circuit, that these microprocessors and chipsets have no reasonable use other than to practice the patents in suit. It is *always* true that a product could have its patented features removed or disabled, be used beyond the reach of U.S. patent law or as a replacement part for an authorized repair, or be resold to a hypothetical purchaser that already has a separate license to use from the patentee. Pet.App.46a-49a. If those possibilities count as non-infringing uses for purposes of exhaustion or contributory infringement, both doctrines would be nullified. *See Lucas Aerospace, Ltd. v. Unison Indus., L.P.*, 899 F. Supp. 1268, 1287 (D. Del. 1995) ("[T]he phrase 'substantial noninfringing use' relates not to whether the portion of the invention supplied by the contributory infringer may be used or sold *outside* the United States, but rather toward whether that component has a use other than to be combined with other items that together fall within the metes and bounds of the claims of the patent."). And even a legitimate non-infringing use does not count if it is "farfetched, illusory, impractical or merely experimental." *E.g.*, Donald S. Chisum, *Chisum on Patents* §17.03 (2007); *see also In re Aimster Copyright Litig.*, 334 F.3d 643, 653 (7th Cir. 2003), *cert. denied*, 540 U.S. 1107 (2004); *Dennison Mfg. Co. v. Ben Clements & Sons, Inc.*, 467 F. Supp. 391, 428 (S.D.N.Y. 1979).[2]

---

[2] LGE also suggests (RespBr-53 n.19) that it might still argue

BEST AVAILABLE COPY

Second, LGE tries to convey the impression that Intel was licensed to sell its microprocessors and chipsets only under what LGE calls the "component" patents, but not under the "systems and method patents" at issue here. *E.g.*, RespBr-6. That is obviously incorrect and inconsistent with LGE's arguments and the findings of both courts below. Paragraph 3.1 of the Intel-LGE License Agreement (JA154) gives Intel a worldwide license to "make, use, [and] sell" "Intel Licensed Products" (*see* JA149(¶1.13); Pet.App.45a-46a; LGE Fed. Cir. Br. 11) [redacted] The courts below correctly recognized that "LGE granted Intel a license covering its entire portfolio of patents" and that Intel sold these microprocessors and chipsets to petitioners "with LGE's authorization." Pet.App.5a; *see also id.* at 29a ("The LGE-Intel License gives Intel the right to manufacture products that would otherwise infringe any of the patents owned by LGE, including the patents at issue here."). Indeed, LGE concedes in its brief to this Court that "LGE's licensing arrangement with Intel eliminated Intel's potential

---

that exhaustion should not apply because these sales may have occurred outside the United States. LGE has never made this argument before, never even requested discovery on the locus of Intel's sales to Quanta, and has clearly waived this issue. Regardless, *Boesch v. Graff*, 133 U.S. 697 (1890), involved sales overseas authorized only by the holder of a *foreign* patent. LGE owns the U.S. patent and gave Intel a *worldwide* license. LGE is invoking the jurisdiction of U.S. patent laws because the products were destined for sale here. The distinction LGE suggests would just arbitrarily encourage patentees to prefer assembly chains outside the United States to those within, for products destined for the United States. No remand is necessary.

liability for *contributing to* infringement of those [system and method] patents by its customers." RespBr-10 n.7. In other words, Intel had authority under the system and method patents to make these sales that, in the absence of such authority, would have contributorily infringed. [redacted]

Third, LGE argues that this case is like *General Talking Pictures Corp. v. Western Electric Co.*, 305 U.S. 124 (1938), because Intel supposedly lacked authority to convey the right to combine the sold components with non-Intel parts. RespBr-39–42. But the holding of cases like *General Talking Pictures* is that a sale knowingly in violation of a manufacturing license makes both the licensee and purchaser infringers. Again, LGE concedes that Intel had full authority to sell to Quanta. Simply redescribing an attempted restriction on downstream purchasers as a restriction on the rights the licensee could convey to the purchasers does not change its nature or negate exhaustion. Under either formulation, an authorized sale (even one with attempted "conditions" or reservations) necessarily exhausts the patentee's statutory rights.

Hence in cases like *Adams v. Burke*, 84 U.S. (17 Wall.) 453 (1873), *Hobbie v. Jennison*, 149 U.S. 355 (1893), and *Keeler v. Standard Folding Bed Co.*, 157 U.S. 659 (1895), this Court held that field-of-use limitations on manufacturing licensees could not be enforced against legitimate purchasers. LGE argues

that those patentees just didn't say the right words, but of course this Court applied exhaustion despite the patentees' vigorous contentions that the restrictions *were* meant to bind purchasers.

Fourth, LGE and certain *amici* profoundly misunderstand the traditional doctrinal distinctions by wrongly suggesting that petitioners propose an arbitrary distinction between patentee sales and licensee sales. Petitioners fully addressed that misconception in their certiorari reply (at 2–4). A patentee can limit who it chooses to sell to, and can restrict who its licensees are authorized to sell to. But neither the patentee nor a licensee can sell an article with authority *without exhausting the patent monopoly in that article.*

3. Even if parties were allowed to "opt out" of exhaustion, LGE and Intel did not. The License says that "[n]otwithstanding anything to the contrary contained in this Agreement, the parties agree that nothing herein shall in any way limit or alter the effect of patent exhaustion that would otherwise apply when a party hereto sells any of its Licensed Products." JA164(¶3.8). LGE itself relies on a strong reading of that proviso to acknowledge that its rights in the "component" patent were exhausted, despite explicit language in the License that "nothing in the licenses granted hereunder or otherwise contained in this Agreement shall ... give either party any right to license the other party's Patents to others." *See* RespBr-5 n.4, 8 n.6. That clause (¶3.8(a)) immediately precedes and is precisely parallel to the more specific one (¶3.8(b)) about downstream combinations with non-Intel components on which LGE hangs its entire argument.

Intel and LGE obviously had a legal disagreement about whether exhaustion would prevent enforcement of LGE's downstream "conditions," and resolved it by agreeing to be bound by the exhaustion doctrine—however that doctrine might be interpreted. Having agreed to that provision LGE is perhaps free to argue (as it did below) that the traditional doctrine permits "conditions" on end users. But it cannot genuinely claim that it negotiated a waiver of that doctrine.

II. AUTHORIZED SALE OF AN UNFINISHED ARTICLE OR COMPONENT CAN TRIGGER EXHAUSTION UNDER THE *UNIVIS* TEST

LGE's principal argument is now that exhaustion is only triggered by sale of a fully infringing article. That is precisely the argument made by the patentee, and rejected by this Court, in *Univis*. This Court held instead that exhaustion is triggered by the sale of any "uncompleted article which, because it embodies essential features of his patented invention, is within the protection of his patent [and is] destined ... to be finished by the purchaser in conformity to the patent." 316 U.S. at 251.

LGE's efforts to distinguish *Univis* are unpersuasive.

1. LGE argues that *Univis* was in part an implied license decision. RespBr-28–29. But the only "license" this Court could have been referring to is one implied in law, because its decision nullified explicit contractual restrictions contained in the parties' license agreements. PetBr-25–28. LGE never grapples with this reality.

LGE finally now concedes that "the two doctrines

rest on wholly distinct foundations." RespBr-23; *see also id.* at 11. But the traditional exhaustion doctrine applied in *Univis*, properly understood, does not "nullif[y] the very concept of implied license." RespBr-23. Sale of a component exhausts a system or method patent only in the very limited circumstances identified above and present here. Implied license occupies a substantially broader field, as LGE itself acknowledges. *Id.* (implied license covers any uses the parties "could reasonably anticipate").

2. LGE argues that in *Univis* the lens blanks were purportedly manufactured and ground "under the *same patent*," RespBr-26, and this Court "'put to one side questions which might arise if the finisher of a particular lens blank utilized the invention of some patent other than the patent which was practiced in part by the manufacturer of the blank.'" RespBr-28 (quoting 316 U.S. at 248). LGE argues that here there are "independent patents for the components and for the systems" which must mean the PTO determined that the combination assembled by Quanta is "patentably distinct" from the components sold by Intel. RespBr-13, 18. LGE's attempted "two patent" distinction fails for several reasons.

First, it fundamentally misunderstands patent law and oversimplifies the facts in this case. *Products* are not patented, *inventions* are. It is not important to patentability whether a claim describes a "component" or instead a broader "system" in which it operates, so long as the claim includes novel features. And the fact that a *different* patent may be infringed by some subset of the system does not mean that the remainder is necessarily "patentably distinct." The inventor of a gas-electric hybrid drive could legitimately seek a

patent claiming only the novel drivetrain, or a patent claiming a complete car incorporating that drivetrain. (The latter would actually be a *narrower* patent claim, since it would add more limitations.) *See, e.g., Pierce v. Allen B. Dumont Labs., Inc.*, 297 F.2d 323, 326 (3d Cir. 1961) (noting that patent "claimed a radio transmitting and receiving system wherein the new stabilizing Pierce oscillator was joined in effective combination with other elements of such a system which, admittedly, were old and familiar in the art"), *cert. denied*, 371 U.S. 814 (1962). If the latter, then an "everything but tires" assembly might not directly infringe, although it would certainly contributorily infringe and satisfy the *Univis* test for exhaustion. LGE wrongly assumes that if any other patent fully reads on the "everything but tires" assembly (perhaps a patent on a smudge-proof dashboard coating) then the PTO has necessarily determined that a car with tires is "patentably distinct" from one without—and that sale of a car without tires should not exhaust the patent.

The facts here illustrate the point. LGE claims to have patents covering the microprocessors and chipsets independently. But as *amici* explain there are tens of thousands of separately patented inventions embodied within Intel's microprocessors and chipsets. The only patent LGE points to, U.S. Patent No. 5,123,108, has absolutely nothing to do with the memory coherence and bus arbitration functions at issue here. It teaches how to bypass register files to speed CPU processing. It is, in other words, a patent on a smudge-proof dashboard coating.

It is not inconsistent with any determination by the PTO to recognize the obvious truth (which LGE *still*

does not attempt to deny or rebut factually) that everything novel or inventive about the patents in suit is contained or executed wholly within the microprocessors and chipsets. PetBr-6–7.[3]

Second, any dispute about that is irrelevant in any event. Quanta has never suggested that the Intel components "embody *every* feature of LGE's patented systems." RespBr-17 (emphasis added). And that is not what *Univis* requires. This Court drew the line in *Univis* at contributory infringement rather than direct infringement. And that makes perfect sense, given that (as illustrated above) the difference between contributory and direct infringement is often an arbitrary matter of claims drafting. LGE cannot and does not actually dispute that Intel's microprocessors and chipsets embody essential features of the patents in suit. Indeed, it admits that Intel contributorily infringed when it sold microprocessors and chipsets to Quanta pre-License. RespBr-31, 10 n.7.[4]

For the same reason, *Aro Manufacturing Co. v. Convertible Top Replacement Co.*, 365 U.S. 336 (1961), *Mercoid Corp. v. Mid-Continent Investment* Co., 320 U.S. 661 (1944) ("*Mercoid I*"), and the other cases LGE relies on are inapt. RespBr-18, 22. Of course the

---

[3] LGE invokes the "two-court rule" to support the irrelevant point that the microprocessors and chipsets alone would not be directly infringing. RespBr-27. Neither court below considered at all whether the combination was "patentably distinct" from those features found solely on the microprocessors and chipsets.

[4] LGE's charge that Quanta is receiving a "windfall" by "paying for an inexpensive item and then selling vastly more expensive products" is absurd. RespBr-34–35. The price of a laptop computer includes the cost of many other components (and inventions) that have nothing to do with LGE's patents.

microprocessors and chipsets are not "'*identical* with the combination,'" but that would only be relevant if the test was direct infringement. RespBr-18 (citation omitted) (emphasis added). And, as Congress confirmed with its 1952 amendments, adding §271(c) and codifying the law as it existed pre-*Mercoid*, any unauthorized "offer[] to sell" a "component" of a "combination" which "constitut[es] a material part of the invention" with no "substantial noninfringing use" *is* contributory infringement. That is the line this Court chose in *Univis*, and that is why Intel needed and obtained a license to sell the components under LGE's combination patents.

Third, LGE misunderstands the question "put to one side" in *Univis*. Quanta did not "utilize[] the invention of some patent *other than* the patent which was practiced in part by [Intel]." 316 U.S. at 248 (emphasis added). Intel "practiced in part" the combination patents in exactly the same sense that the lens blank manufacturer practiced in part the patents that read onto the finished lenses in *Univis*. And the lens blanks sold in *Univis* were also covered by separate patents fully practiced by the manufacturer of the blank. *Id.* at 246 (of the thirteen patents at issue, five were fully practiced in making the lens blanks)

3. LGE then attempts to distinguish *Univis* on the cryptic ground that "[t]he modifications made by the retailers ... did not alter the basic nature of the manufactured articles and were not capable of being awarded independent patent rights," whereas supposedly here "[t]he components sold by Intel do not constitute the entire physical structure of the patented systems." RespBr-26, 27. *Univis* provides no basis for an arbitrary distinction between components that are

"modified" post-sale and those that are combined with other generic components. Nor does LGE explain why, for example, a claim calling for the downstream purchaser to cut a hole out of a solid circle should exhaust a patent owner's rights, but a claim requiring that purchaser to fill a hole in a hollow circle should not.

Any such rule would be vague and unworkable. The contributory infringement line this Court drew in *Univis* has survived for over sixty years and incorporates a well-understood body of law. Applying that standard here does not mean that "the first lawful conveyance of *any* component exhausts the patent holders' rights in the patented system." RespBr-25 (emphasis added). Nor does it extinguish "the patent holder's rights in *any* independently patented system in which the article will be used." *Id.* at 23 (emphasis added). Only if the patentee authorizes sale of a component that embodies essential features of the invention *and* has no other reasonable use but to be finished into a fully infringing article is exhaustion triggered.

III. SECTION 271(D)(2) DID NOT OVERRULE *UNIVIS*

LGE and its *amici* argue that 35 U.S.C. §271(d)(2) should be read literally to abolish exhaustion for authorized sales by contributory infringers. That argument was not made below, nor in the brief in opposition, and is waived. And in the 55 years since Congress enacted §271(d)(2), we have not identified a single court or commentator that has ever suggested this interpretation (nor, apparently, have LGE or its *amici*). Indeed, to our knowledge this issue appeared

for the first time in a footnote in the United States's brief supporting certiorari (at 20 n.7), which identified the argument but concluded that the statute could not plausibly be read that way.

Congress adopted §271(c) and (d) "for the express purpose of reinstating the doctrine of contributory infringement as it had been developed by decisions prior to" the *Mercoid* decisions. *Aro Mfg. Co. v. Convertible Top Replacement Co.*, 377 U.S. 476, 492 (1964) ("*Aro II*"). In the *Mercoid* decisions this Court expansively construed the misuse doctrine to prohibit *all* attempts to control unpatented components or materials, essentially swallowing contributory infringement law. *See Mercoid I*, 320 U.S. at 664–65. Paragraph (c) "adopts a restrictive definition of contributory infringement," which is "counterbalanced by limitations on patent misuse in § 271(d)." *Dawson Chem. Co. v. Rohm & Haas Co.*, 448 U.S. 176, 200–01 (1980). Subsection (d) lists five things a patentee may do, and "uses language broad enough to push back both the misuse doctrine and any conflicting judicial interpretation of antitrust law, as such, in the phrase 'misuse or *illegal* extension of the patent right.'" Giles S. Rich, *Infringement Under Section 271 of the Patent Act of 1952*, 35 J. Pat. Off. Soc'y 476, 499 (1953) (quoting §271(d)).

LGE and its *amici* rip §271(d)(2) out of the overall structure and purpose of the statute, and fail to account for the fact that it applies only to patent owners "*otherwise entitled to relief.*" LGE is not "otherwise entitled to relief," because exhaustion independently bars recovery. And the phrase "shall [not] be denied relief" just means, in context, that a misuse defense will not apply in an infringement or contributory

infringement action simply because the patent owner engaged in one of the listed activities. *See, e.g.*, *Dawson*, 448 U.S. at 187–214 (describing decisional and legislative history); *Aro II*, 377 U.S. at 492. In other words, "[n]o patent owner otherwise entitled to relief ... shall be denied relief [*for*] or deemed guilty of misuse or illegal extension of the patent right" solely by doing any of those things. The word "for" is implicit, or at most its omission is a classic "scrivener's error," and it is entirely "within [the] Court's competence" to correct such errors. *Dir., Office of Workers' Comp. Programs v. Newport News Shipbuilding & Dry Dock Co.*, 514 U.S. 122, 142 (1995) (Ginsburg, J., concurring); *see also, e.g.*, *United States v. X-Citement Video, Inc.*, 513 U.S. 64, 82 (1994) (Scalia, J., dissenting). LGE's expansive reading of "shall [not] be denied relief" produces the absurd result that a patentee could sue for contributory infringement even where it has licensed the supposed contributory infringer. "Where the literal reading of a statutory term would 'compel an odd result,'" the Court "must search for other evidence of congressional intent to lend the term its proper scope." *Pub. Citizen v. U.S. Dep't of Justice*, 491 U.S. 440, 454 (1989) (citation omitted).

Nothing in the legislative history of §271(d) even remotely suggests that Congress *sub silentio* overruled *Univis*, and no court has ever read the statute that way. As this Court cautioned in *Deepsouth Packing Co. v. Laitram Corp.*, 406 U.S. 518, 531 (1972), "we should not expand patent rights by overruling or modifying our prior cases construing the patent statutes, unless the argument for expansion of privilege is based on more than mere inference from

ambiguous statutory language."

IV. ANY MODIFICATION OF TRADITIONAL EXHAUSTION PRINCIPLES MUST COME FROM CONGRESS

The exhaustion doctrine has been "a fixture of US patent law" "[f]or over a century." Richard H. Stern, *The Unobserved Demise of the Exhaustion Doctrine in US Patent Law*, 15 Eur. Intell. Prop. Rev. 460, 460 (1993). It represents an application of ordinary personal property principles to patented articles that is perfectly sensible and consistent with the statutory scheme. *See* 35 U.S.C. §261 ("Subject to the provisions of this title, patents shall have the attributes of personal property."); Stern, *supra*, at 460 ("Under the exhaustion doctrine, when a patent owner sells a patented article to a customer, ... [p]roperty law, rather than patent law, then governs customers' use of such property."); *Keeler*, 157 U.S. at 666 (purchaser "becomes possessed of an absolute property in such articles"); *Chaffee v. Boston Belting Co.*, 63 U.S. (22 How.) 217, 223 (1859) ("private individual property of the purchaser"); *Ethicon, Inc. v. U.S. Surgical Corp.*, 135 F.3d 1456, 1470 (Fed. Cir.) ("The law of patent ownership has its roots in the common law of property ...."), *cert. denied*, 525 U.S. 923 (1998). The scope of rights granted under the patent laws "must be strictly construed so as not to derogate from the general law beyond the necessary requirements of the patent statute." *United States v. Masonite Corp.*, 316 U.S. 265, 278–80 (1942).

Congress has never modified the exhaustion doctrine, despite many opportunities. LGE wrongly conflates the well-established rule that statutes should

be read in light of longstanding prior judicial interpretations with the more controversial use of legislative history. RespBr-46. And it does not deny that "Congress repealed prior patent laws and extensively revised them" in 1952, *In re Zurko*, 142 F.3d 1447, 1455 (Fed. Cir. 1998), *rev'd on other grounds*, 527 U.S. 150 (1999), which distinguishes LGE's cited language from *Alexander v. Sandoval*, 532 U.S. 275, 292 (2001), involving "isolated amendments."

Congress's decision to codify the first sale doctrine in the Copyright Act but not the patent laws does not reflect implicit disapproval of exhaustion in the patent context, but rather Congress's desire to restrict the doctrine in the copyright context. For example, Congress specified that purchase of a phonorecord or software would not convey the right to rent or lend it out "unless authorized by the owners of copyright"—presumably to facilitate certain forms of price discrimination that might otherwise be defeated by exhaustion principles. *See* 17 U.S.C. §109(b).

As noted *supra*, at 1, this Court's recent move away from *per se* condemnation of vertical restraints in the antitrust context is irrelevant. This Court has never regarded the patent laws as a broad charter for evolving common law decisionmaking like the antitrust laws. *See State Oil Co. v. Khan*, 522 U.S. 3, 20 (1997). In any event, the recent antitrust cases are about what sorts of vertical agreements may be enforced *by contract*, and do not undermine the traditional rule (from which exhaustion springs) that servitudes running with chattels are unenforceable under *property* law.

V. PUBLIC POLICY FAVORS THE TRADITIONAL EXHAUSTION DOCTRINE

The traditional exhaustion rule in no way disturbs, or even implicates, a patent owner's freedom of contract. It simply defines the limits of the *statutory* cause of action for infringement, and clarifies that patentees may not use patent law to create servitudes that run with chattels after an authorized sale and are enforceable against parties that have not agreed to them. LGE and its *amici* accept the longstanding rule against personal property servitudes in ordinary property law (RespBr-49; ProfessorsBr-14), yet cannot explain why a different rule should apply to the sale of patented articles. And they fail to recognize the consequences the Federal Circuit's holding will have for antitrust law.

1. LGE argues that the *Univis* rule produces "absurd and conflicting results" if a patent reading on a component and a separate patent reading on a system that is the component's only reasonable use are held by different people, because "the holder of the system patent could see its patent rights extinguished without its consent and without any action on its part." RespBr-24. That simply misunderstands *Univis* and the traditional doctrine. A sale authorized by one patentee does not exhaust patents *held by a different patentee*, whether those patents read on a downstream combination or even on the sold article itself.

2. LGE and its *amici* argue that "two-tiered" and other elaborate licensing arrangements would be threatened by consistent application of the traditional exhaustion doctrine, and that such arrangements are necessary to ensure that patent owners receive an

adequate reward. But their arguments will not bear close scrutiny.

First, the dire warnings of LGE's *amici* are clearly overblown. *Amici* themselves illustrate that multi-tier licensing arrangements are not difficult to achieve under traditional law, even when exhaustion would be triggered under the *Univis* test. Qualcomm explains that its manufacturing licensees are only authorized to sell to purchasers who have a separate purchasing license. QualcommBr-8–9. And, exactly like the patentee in *Mitchell v. Hawley*, 83 U.S. (16 Wall.) 544 (1873), iBiquity has licensed chip manufacturers only to make chips and loan them out pursuant to a sublicense to use—but never to "sell" them. iBiquityBr-2, 12. All of the multi-tier royalty, "patent pool," and cross-licensing arrangements that *amici* contend are essential in particular fields could easily be structured in either of these ways—with the salutary consequence that the affected downstream parties will be aware of the patentee's specific demands up front.

The Qualcomm strategy will sometimes limit the patentee to suits for breach, not infringement. But that option is good enough to keep the wheels of commerce turning in every other context. Shifting rights from contract to patent law is hardly "benign." RembrandtBr-25. Infringement suits allow patent holders to seek injunctive relief, treble damages, and attorneys fees, and extend to parties not in privity and without notice. AAIBr-15.

Second, LGE and its *amici* never coherently explain why patentees instead need the right to simply authorize non-exhaustive sales. They argue that it would be too expensive, impractical, or somehow

"inhibit efficient dissemination of the technology in the marketplace" to require purchaser licenses like Qualcomm's *before* they authorized the sale. TPLBr-19; *see also* RespBr-33–34; PapstBr-15. According to TPL, it is "far more efficient" to allow LGE to wait until purchasers "have adopted the technology, and determined its worth to them" before negotiating a license, because that way the patent owner can safely "know[] where there is market demand for the technology." TPLBr-19–20.

That argument is dangerous nonsense, and opens the door to obvious opportunities for abuse. No rational purchaser would prefer to negotiate for patent rights *after* it has already purchased the product and exposed itself to infringement liability, and there certainly is no reason to think that the negotiations will be more efficient if delayed. As *amicus* Dell Inc. observes, such delay only fosters "lock-in" effects that allow the patentee to capture the purchaser's sunk costs rather than whatever the actual *ex ante* value of the patent would have been. DellBr-12–18. And *amici* Automobile Engine Rebuilders Association describes (at 16–18) how, after *Mallinckrodt*, post-sale restrictions are a tool for "openly target[ing] lawful competition, not compensation for patent rights."

The legal regime that *amici* advocate is plainly not designed to produce the economically efficient outcome, but instead to foster information asymmetries and mistakes. Their theory is designed to help patentees lurk in the background while potentially infringing products are disseminated widely, in order to multiply the potential targets for infringement suits or shake-down licensing demands. This is the "inconvenience and annoyance to the public" that this Court

anticipated and condemned more than 100 years ago. *Keeler*, 157 U.S. at 667. Indeed, a claimed right to send products out into the stream of commerce still subject to unspecified and potentially limitless royalty demands by the patentee is precisely the form of post-sale restraint that this Court called a "perfect instrument of favoritism and oppression" in *Motion Picture Patents Co. v. Universal Film Manufacturing Co.*, 243 U.S. 502, 515 (1917).

If for some reason a patentee believes that it is necessary or efficient to divide its royalty between the first purchaser and downstream purchasers, then the only sensible and efficient rule would put the burden on the patentee to make that arrangement clear to all parties, and to negotiate its economic terms, *before* authorizing a sale that would otherwise trigger exhaustion—as Qualcomm has done. That need not even require elaborate negotiations; the patentee could simply give the manufacturing licensee a standard form license agreement for downstream purchasers (like Qualcomm's SULA licenses), and require that it be executed simultaneous with any sale.[5]

Third, LGE and its *amici* have a distorted and schizophrenic view of what constitutes "full value" for the patent. RespBr-33. The "sell first, license later" schemes they promote are designed to delay and skew licensing negotiations so that they focus not on the

---

[5] As iBiquity demonstrates, nothing about the traditional rule prohibits the patentee from negotiating flexible licenses that allow companies "to share the risks of producing a product that has not yet achieved widespread market acceptance." iBiquityBr-19. For instance, the amount of royalty payments could be based on the level of acceptance of the product, or could be keyed to downstream sales or product returns.

value of the patent, but instead on the purchaser's sunk costs. Successive negotiations with different stages of the distribution chain also allow the patentee to extract nuisance royalties from each target, because no company separately has sufficient incentive to litigate.[6]

LGE's *amici* acknowledge the economic truism that there is only one "monopoly" profit in any vertical distribution chain, but nevertheless argue that it is somehow necessary for a patentee to set up multiple toll booths in that same chain in order to secure its fair reward. They suggest that component manufacturers would be unwilling or unable to pay upfront the "full [downstream] value, measured as a reasonable royalty," because the cost would greatly inflate the component price, and downstream purchasers would be unwilling to pay it. *See, e.g.*, AmberwaveBr-19–20. That makes no economic sense. If a downstream assembler would be willing to pay X for a component and then Y to the patent owner for the right to use it, it would logically be willing to pay the component manufacturer X+Y for the same bundle of rights—unless it is somehow essential to the patentee's strategy to confuse the downstream buyer or (as Amberwave's discussion suggests) part of Y reflects the nuisance value of resolving threatened patent litigation.[7]

---

[6] *Amici* Wi-LAN may be correct that the traditional doctrine "propel[s] electronic component manufacturers ... into conflict with patent owners" (Wi-LanBr-2), but public policy favors encouraging challenges to dubious patent demands. *See Lear, Inc. v. Adkins*, 395 U.S. 653, 670–71 (1969).

[7] It also makes no sense to suggest, as some *amici* do, that component makers cannot pass along high royalty rates because they face "fierce competition" for OEM sales. InterDigitalBr-12–

LGE and its *amici* suggest that if exhaustion were triggered by sale of a component, then patentees would be unable to realize the separate value of a patent that is directly infringed only at a later point. *See, e.g.*, InterDigitalBr-11–12. But the value of any patent is just how much royalty burden the production chain can bear before either (a) the price of the end product is raised, and sales depressed, beyond the profit-maximizing equilibrium for the patentee, or (b) the chain has sufficient economic incentive to design around or substitute away from the patent. The former is the same whether the patentee has one patent or twenty.[8] Additional patents may increase (b), but again the downstream infringer's calculus is the same whether it is paying (X+Y) to the component seller or X to the component seller and Y to the patentee.

Fourth, LGE and its *amici* argue that the first purchaser will often lack sufficient information about the value of the patent to downstream buyers. But the first purchaser can negotiate with its own customers as easily as the patentee can. Upstream suppliers must negotiate for crucial inputs to distribution chains all the time, and business does not grind to a halt. (An oil

---

13. If competition for OEM sales makes component manufacturers unwilling to pay for patent rights, it could only be because those patent rights are not necessary or not valuable—*e.g.*, if it is more cost-effective for the component manufacturer to design around the patent than to pay the demanded royalty.

[8] *See* Dennis W. Carlton & Jeffrey M. Perloff, *Modern Industrial Organization* 407–10 (4th ed. 2005). A different result would obtain if patents were held by separate patentees, but only because independent profit-maximizing behavior by the second patentee leads to less output, higher prices, and lower total profits than in the single-patentee scenario. *Id.* at 415–18.

company negotiating a drilling lease must keep its eye on the price that downstream refiners are obtaining for gasoline.) And the patentee would have every incentive to share its own information with the first purchaser.

The real information problem is created by the proposals of LGE and its *amici*. Amberwave suggests that a downstream purchaser would never pay the "full value" of the patent to a component manufacturer because "it would be depriving itself of the ability to make a purchasing decision based on the value that it receives from practicing the patents applicable to the component." AmberwaveBr-5. To the contrary, internalizing the "full value" of patents necessarily infringed by the only reasonable use of a component *into the price of that component* is the best way to allow downstream buyers to make an apples-to-apples comparison. Otherwise the downstream purchaser cannot know what that component will cost it until the patentee makes its royalty demand. The traditional exhaustion rule thus solves far more negotiation problems than it creates.[9]

Fifth, as predicted (PetBr-50), the only coherent policy justification offered by LGE and its *amici* is that a strong exhaustion rule sometimes permits arbitrage

---

[9] Amberwave also argues that if the full royalty is internalized into the component price downstream buyers will lose all ability or incentive to challenge the patentee's infringement claims. AmberwaveBr-5. Of course any incentive the downstream buyer lost, the upstream seller would gain. Regardless the premise is incorrect. *Both* parties would have an incentive to challenge the patent, and after *MedImmune, Inc. v. Genentech, Inc.*, 127 S. Ct. 764 (2007), the downstream buyer could bring a declaratory judgment action on the basis of the inflated prices it is paying.

to erode price discrimination strategies. Their analysis is, however, simplistic and incomplete. Ordinary sellers do not have the right to prevent all arbitrage, beyond what can be enforced by contract. And unexpected uses of sold products have always been a source of significant innovation and economic activity. If someone figures out how to use a truck to power a mill and grind flour, the truck seller has not been swindled merely because he was deprived of an opportunity to charge that buyer a ten-fold higher price. LGE's suggestion that patentees will withhold inventions from the marketplace unless they can arrange to capture all such unexpected benefits is simply absurd.

And while price discrimination between different groups of buyers generally makes the seller better off at the expense of buyers, the effects on net societal welfare (allocative efficiency) are ambiguous—"better or worse than nondiscriminating monopoly pricing from an efficiency viewpoint, depending on the shapes of the demand and cost curves." Carlton & Perloff, *supra*, at 306. Economic analysis suggests no reason for this Court to give patent owners more powerful price discrimination tools than are enjoyed by ordinary sellers, in the absence of some direction from Congress. In most circumstances the increased reward to the patentee would not even be related to the inventive value of the patent. (A patent on smudge-proof dashboard coatings might, for example, just give Ford an excuse to discriminate between customers who use their pickup truck to haul scrap wood and those who haul scrap aluminum.)

Sixth, LGE and its *amici* are deeply incoherent on the question of whether any notice would be required

to downstream purchasers.

For example, Yahoo! argues (at 13) that effective notice would cure any external information costs. But it does not explain where such a notice requirement would come from, doctrinally, or how the adequacy of a particular notice would be judged. LGE's position, shared by many *amici*, is that "'[n]o one can convey ... any better title than he owns.'" RespBr-39 (citation omitted) (omission in original); MPEGLABr-15 n.9; AerotelBr-11. Under that rationale, notice is irrelevant. *Amicus* Intellectual Property Owners tries to split the difference by saying that notice is necessary, "but only by the patentee to the first purchaser or first licensee." IPOBr-14.

Without a notice requirement, any "optional" exhaustion doctrine would be tremendously unfair and inefficient. But LGE's *amici* implicitly concede that this Court would have to construct a new jurisprudence of effective notice from whole cloth. The Federal Circuit has pretended to locate such a jurisprudence in the Uniform Commercial Code, but its analysis is so obviously incorrect that neither LGE nor any of its *amici* attempt to defend it.

3. Neither LGE nor any of its *amici* engage at all with the obvious threat to antitrust law posed by permitting post-sale restraints to be enforced under the umbrella of the patent monopoly. PetBr-50–51; USBr-29. They assert that "[t]ying arrangements and price controls, as well as other anticompetitive restrictions on the 'use' and sale of patented articles, would continue to be outside the patent protection and fully subject to antitrust scrutiny." RespBr-48. But that simply is not an accurate statement of the law.

This Court upheld price-fixing conditions in *United States v. General Electric Co.*, 272 U.S. 476 (1926), and *Bement v. National Harrow Co.*, 186 U.S. 70 (1902), precisely because they were imposed through a licensing scheme that fell within the scope of the patent grant. PetBr-32. And the entire question for decision in *Univis* was whether vertical resale price maintenance that would otherwise have been *per se* illegal at the time was nonetheless sheltered from antitrust by the patent laws. 316 U.S. at 251–52.

The Federal Circuit has pretended to turn that analysis upside down, by ostensibly making the enforceability of conditions under patent law depend on whether those conditions violate antitrust law. But that inversion is only skin deep. The Federal Circuit does not genuinely examine whether conditions have anticompetitive effects, but just whether they are related "to subject matter within the scope of the patent claims." *Mallinckrodt, Inc. v. Medipart, Inc.*, 976 F.2d 700, 708 (Fed. Cir. 1992); *see* AAIBr-24–25. [10]

4. LGE suggests that license agreements entered *before* infringement should be treated the same as settlement agreements *after* infringement, which permit a patent owner to sue both direct and contributory infringers at the same time and settle separately. But LGE fails to reconcile its argument with the rule that patent owners are entitled to collect only one reasonable royalty from all potential

---

[10] AIPLA argues that "[t]here is no *per se* anti-competitive effect in allowing licensors and licensees the freedom to create" post-sale restrictions. AIPLABr-2. But under the Federal Circuit's approach, post-sale restrictions are effectively *per se lawful*.

infringers. *See, e.g., Glenayre Elecs., Inc. v. Jackson*, 443 F.3d 851, 864 (Fed. Cir.), *cert. denied*, 127 S. Ct. 582 (2006); *Lucent Techs. Inc. v. Gateway, Inc.*, 509 F. Supp. 2d 912, 937 (S.D. Cal. 2007). Courts can assess that in a litigation context, where damages are evaluated in dollars. But neither LGE nor its *amici* suggest any way for this Court (let alone Quanta) to assess whether the royalty already paid by Intel (consisting of large monetary payments and a cross-license to Intel's unfathomably valuable patent portfolio) constituted an appropriate reward. The only sensible prospective rule is to force patent owners to decide themselves whether the consideration offered for the right to sell infringing (and contributorily infringing) products is sufficient.

5. Several *amici* suggest that patentees need the ability to declare peace with regard to products (such as general purpose microprocessors) where patent rights are hopelessly tangled and overlapping, while retaining the right to enforce those patents against downstream products. Of course moving downstream just adds even more patents and complexity to the calculus. Regardless, as Qualcomm proves it is easy to structure multi-tier licenses consistent with traditional law; you just have to negotiate with the downstream purchasers (or pick a standard royalty) in advance of the sales.

Other *amici* argue that exhaustion should not be triggered by licenses granted for no consideration at all, or by bare covenants not to sue (which they assume are different in some way from a true license). This Court could reserve such questions, since they are not remotely presented here. LGE received ample consideration from Intel in exchange for what both

courts below recognized was a full license to "make, use, [and] sell" the products at issue. JA154(¶3.1); *supra*, at 4-5. LGE has never contended otherwise, and failed to dispute petitioners' factual characterizations to that effect in the petition. *E.g.*, Pet-3; S. Ct. R. 15.2.

VI. METHOD PATENTS CAN BE EXHAUSTED

LGE's brief defense of the Federal Circuit's assertion that method claims can never be exhausted rests on the same arbitrary formalism as its central argument, refuted *supra*, at 8-10. LGE correctly points out that a sold article, standing alone, cannot *directly* infringe a method patent (just as it cannot directly infringe a patent covering a broader system to which that article is a necessary component). But under *Univis* exhaustion is triggered by sale of *contributorily infringing* articles as well, and a sold article certainly can contributorily infringe a method patent. LGE's attempt to distinguish *Univis* and *Ethyl Gasoline Corp. v. United States*, 309 U.S. 436 (1940), is baffling. *Ethyl Gasoline* clearly held that a method patent practiced only by the downstream purchaser was exhausted by an upstream sale of lead additive. PetBr-35.

As the method patent in *Ethyl Gasoline* illustrates, the distinction between apparatus and method patents is often an arbitrary matter of claims drafting. *See* PetBr-35–38; NCRBr-5–15. Even LGE's *amicus* AIPLA concedes that it makes no sense to "apply[] the law differently to ... method and product claims" where, as here, "the component is being used for one of the intended, claimed methods." AIPLABr-7.

CONCLUSION

The Federal Circuit's holding that patent exhaustion does not apply should be reversed.

Respectfully submitted,

TERRENCE D. GARNETT
VINCENT K. YIP
PETER WIED
PAUL, HASTINGS, JANOFSKY & WALKER LLP
515 SOUTH FLOWER STREET
25TH FLOOR
LOS ANGELES, CA 90071
(213) 683-6000

MAXWELL A. FOX
PAUL, HASTINGS, JANOFSKY & WALKER LLP
34 F ARK MORI BUILDING
P.O. BOX 577
12-32 AKASAKA 1-CHOME
MINATO-KU, TOKYO 107-6034
JAPAN
813 6229 6100

MAUREEN E. MAHONEY
Counsel of Record
J. SCOTT BALLENGER
BARRY J. BLONIEN
MELISSA B. ARBUS
ANNE W. ROBINSON
LATHAM & WATKINS LLP
555 11TH STREET N.W.
SUITE 1000
WASHINGTON, D.C. 20004
(202) 637-2200

Counsel for Petitioners

8

No. 06-937

FILED
SEP 4 - 2007
OFFICE OF THE CLERK
SUPREME COURT, U.S.

IN THE

Supreme Court of the United States

QUANTA COMPUTER, INC., *et al.*,
Petitioners,

v.

LG ELECTRONICS, INC.,
Respondent.

On Petition for a Writ of Certiorari to the United States Court of Appeals for the Federal Circuit

---

SUPPLEMENTAL BRIEF FOR RESPONDENT

RICHARD G. TARANTO
(Counsel of Record)
FARR AND TARANTO
1220 19th Street, NW
Suite 800
Washington, DC
(202) 775-0184

WILSON-EPES PRINTING CO., INC. – (202) 789-0096 – WASHINGTON, D. C. 20002

TABLE OF CONTENTS

	Page
TABLE OF AUTHORITIES	ii
ARGUMENT	1
A. The Government's View of This Court's Precedents, Even If Correct, Does Not Justify Review	2
B. The Government's View of This Court's Precedents Is Incorrect	5
CONCLUSION	10

TABLE OF AUTHORITIES

CASES — Page

Adams v. Burke, 84 U.S. 453 (1873) 7
Andrus v. Allard, 444 U.S. 51 (1979) 7
Aro Mfg. Co. v. Convertible Top Replacement Co., 377 U.S. 476 (1964) 2
Bloomer v. McQuewan, 55 U.S. 539 (1853) 8
Christianson v. Colt Indus. Operating Corp., 486 U.S. 800 (1988) 7
General Talking Pictures Corp. v. W. Elec. Co., 304 U.S. 175 (1938) 6
Henry v. A.B. Dick Co., 224 U.S. 1 (1912), overruled by *Motion Picture Patents Co. v. Universal Film Mfg. Co.*, 243 U.S. 502 (1917) ... 7
Hobbie v. Jennison, 149 U.S. 355 (1893) 8
Illinois Tool Works Inc. v. Independent Ink, Inc., 126 S. Ct. 1281 (2006) 6
Keeler v. Standard Folding-Bed. Co., 157 U.S. 659 (1895) 8
Mallinckrodt, Inc. v. Medipart, Inc., 976 F.2d 700 (Fed. Cir. 1992) ..... *passim*
Metro-Goldwyn-Mayer Studios Inc. v. Grokster, Ltd., 545 U.S. 913 (2005) 7
Mitchell v. Hawley, 83 U.S. 544 (1873) ..... *passim*
Motion Picture Patents Co. v. Universal Film Mfg. Co., 243 U.S. 502 (1917) 6, 7, 8
United States v. Craft, 535 U.S. 274 (2002) 7
United States v. Gen. Elec. Co., 272 U.S. 476 (1926) 6
United States v. Univis Lens Co., 316 U.S. 241 (1942) ..... *passim*

STATUTES AND OTHER AUTHORITIES

35 U.S.C. § 154 10
35 U.S.C. § 271 10

TABLE OF AUTHORITIES—Continued

Page

FTC, *To Promote Innovation: The Proper Balance of Competition and Patent Law and Policy* (Oct. 2003) 4

U.S. Dep't of Justice and FTC, *Antitrust Enforcement and Intellectual Property Rights: Promoting Innovation and Competition* (Apr. 2007) 4

U.S. Dep't of Justice and FTC, *Antitrust Guidelines for the Licensing of Intellectual Property* (1995) 4

W. Robinson, *The Law of Patents* (1890) 6-7

ARGUMENT

The Government's uncharacteristically limited basis for recommending review is that the Federal Circuit's rule since 1992, *i.e.*, that an otherwise-lawful condition on a sale can preserve patent rights, "appears" to conflict with certain older decisions of this Court. Even if that claim were correct, it would not justify certiorari. There is simply no problem in the patent world that warrants review of the basis on which licenses have been written for the past 15 years—either to reaffirm it (the Government stops short of urging otherwise) or to redefine it (unsettling existing contracts).

The Government's brief offers literally no support for the assertion that the issue here has produced practical problems. It does not allege any inter- or intra-circuit conflict or confusion. And it does not cite *any* source documenting a real-world problem or uncertainty regarding exhaustion generally, let alone narrower issues concerning sales under contract limitations. Those omissions positively confirm the absence of any difficulty in the patent world, because the Federal Circuit approach has been in place for 15 years. Moreover, even under the Government's unduly narrow view of the key precedent, *Mitchell v. Hawley*, 83 U.S. 544 (1873), the difference between losing and preserving patent rights against downstream assemblers remains merely one of parties' drafting. Certiorari is not warranted to address a non-existent problem or to review the form in which market-place transactions should take place.

In any event, the Government's reading of this Court's decisions is unsound. No decision of this Court holds that patentees lose their patent rights based on sales made only under restrictions that themselves are lawful (violating no antitrust, patent misuse, or other bar). *Mitchell* positively establishes that a patentee-imposed restriction on the use rights a licensee may convey when selling an article preserves the patentee's rights against the purchasers for use contrary to

the restriction. And the Government can cite no contrary decision, including *United States v. Univis Lens Co.*, 316 U.S. 241 (1942), which involved an *otherwise-illegal* sale restriction, not an otherwise-legal one, and thus is fully consistent with the Federal Circuit's rule.

In the end, exhaustion is part and parcel of, not different in kind from, implied license, as *Aro Mfg. Co. v. Convertible Top Replacement Co.*, 377 U.S. 476, 484 (1964), recognizes, setting only a *default* consequence that parties may avoid by lawful redefinition of the rights conveyed. Neither the statute nor policy nor precedent supports a doctrine that curtails the freedom of patentees and users of their technology to define in otherwise-lawful ways the rights transferred and how compensation shall be spread out. Such definition is what took place here (in contracts that Intel still keeps partly secret)—the Government accepts that the circumstances negated any implied license—and what occurs successfully throughout the technology world.

For at least those reasons and other previously stated—for example, the case is interlocutory in posture, and set for trial in January, including on *method* claims, which the Government recognizes this Court has never held subject to exhaustion, *see* USBr. 17—the petition should be denied.

A. The Government's View of This Court's Precedents, Even If Correct, Does Not Justify Review

Even if the Government's view of this Court's precedents were correct, certiorari should be denied. The Government recognizes that the approach to exhaustion at issue is hardly novel, but has prevailed in the Federal Circuit for the past 15 years. *See Mallinckrodt, Inc. v. Medipart, Inc.*, 976 F.2d 700 (Fed. Cir. 1992). The Government never declares that approach to be wrong or argues for its rejection if reviewed. It says only that the *Mallinckrodt* rule, that an otherwise-valid condition on a sale can preserve patent rights, "appears to

conflict" with certain opinions from this Court. USBr. 6; *id.* at 6-17. But even if that premise is accepted, the Government has not justified certiorari. The Government is urging the Court to address a problem that does not exist, to undertake a debate about the mere form in which market transactions could occur even under the Government's view of cases, and possibly to unsettle existing contracts.

The Government offers no evidence whatever that the *Mallinckrodt* rule, or any uncertainty about its consistency with this Court's decisions, has caused any difficulty, jurisprudential or practical. The Government's brief discussion of importance (USBr. 17-19) alleges no intercircuit or intracircuit conflicts or confusion on the matter. It cannot say that *Mallinckrodt* either has produced or could validate contract restrictions violating antitrust or other proscriptions, because *Mallinckrodt* expressly says the opposite. 976 F.2d at 708 ("Unless the condition violates some other law or policy (in the patent field, notably the misuse or antitrust law, *e.g.*, [*Univis*]), private parties retain the freedom to contract concerning conditions of sale."). *Mallinckrodt* fully preserves all policies that make *particular* conditions improper and hence precludes worries about anticompetitive arrangements. The Government is thus left only to make the naked, unsupported assertion that the issue is "of substantial ongoing practical importance," with guidance (content unspecified) "much needed." USBr. 17, 19.

The Government cites literally no support for that claim. If the issue were causing significant problems in practice, there would by now be a record of cases, or a literature (legal, economic, professional), documenting such problems—whether caused by the 15-year-old *Mallinckrodt* approach itself or caused by "dissonance" (USBr. 18) with this Court's decisions. In fact, exhaustion issues arise only occasionally, and there is no basis for finding a marketplace difficulty. The Government's inability to cite any contrary proof whatever

confirms that there is *no* problem needing attention here. That fact makes this case sharply different from other patent cases recently reviewed by this Court, which involved issues (obviousness, injunction, doctrine-of-equivalents standards) that arise daily and had produced lower court confusion and indications of real-world problems. *See* Opp. 12-14.

Other facts confirm that the issue here has generated no real-world problem. *First*, unlike in other recent patent cases, the business community here is all but silent. The only amici urging review (an inherently one-side presentation) are (a) three customers of petitioners (Dell, HP, Gateway) with a direct interest in this particular case and (b) a business (Minebea) that had an exhaustion case that has since settled. *Second*, the Justice Department and FTC have comprehensively studied patent issues in recent years. Tellingly, exhaustion has not been identified as even warranting discussion as a serious problem.[1]

Finally, the Government's own view of this Court's precedents confirms that the ruling lacks practical importance. Even under that (unduly narrow) view, the preservation of patent rights is just a matter of contract drafting. The Government recognizes that, ever since *Mitchell* (1873), patentees have been fully able to preserve their rights by avoiding the language of sale subject to restriction and instead drafting their licenses to manufacturers in use-license language. USBr. 12-14. Although that language should not be necessary, the Government recognizes that it is effective if adopted. The precise location of the line for preserving patent rights is not certworthy when it remains a matter for private drafting to accomplish the result of preservation. *See*

---

[1] *See* U.S. Dep't of Justice and FTC, *Antitrust Enforcement and Intellectual Property Rights: Promoting Innovation and Competition* (Apr. 2007); FTC, *To Promote Innovation: The Proper Balance of Competition and Patent Law and Policy* (Oct. 2003); U.S. Dep't of Justice and FTC, *Antitrust Guidelines for the Licensing of Intellectual Property* (1995).

BEST AVAILABLE COPY

Opp. 2, 15-16. The form of transactions, when the market effects could be unchanged, is not a matter needing attention. And a sudden change in the basis on which contracts have been written for 15 years could be harmfully unsettling.

In short, the Government's sole basis for recommending review is a claim that stops short of saying that *Mallinckrodt*'s clear 15-year-old rule is wrong or harmful, but asserts only that the rule "appears" inconsistent with some older decisions of this Court. In the utter absence of a problem caused by *Mallinckrodt*, that is insufficient to support certiorari.

B. The Government's View of This Court's Precedents Is Incorrect

In any event, the Government is wrong in its view of what this Court's precedents might require. The Government's view of the cases rests on two principal errors. It does not give *Mitchell* its proper significance as supporting *Mallinckrodt*. And it misreads *Univis* as contradicting *Mallinckrodt*.

The Government says that the Court's decisions treat exhaustion as an "implied-in-law license under the patent laws to practice the patent." USBr. 8. But that characterization (like the formulation, "delimiting the exclusive rights," USBr. 7) just leads to rather than answers the question at issue: whether the "implied in law" license based on first sales, unlike licenses implied in law based on other circumstances, is immune from alteration by parties' otherwise-valid sale conditions. *Mallinckrodt* ruled that parties *can* alter the default implication of patent-practicing authority by adopting restrictions, but only if the restrictions are themselves lawful—a distinction that reflects the sensible notion that an *unlawful* act may not be invoked to override an implication of authority that a sale otherwise conveys. Although the Government suggests that this Court's precedents "appear[]" to conflict with *Mallinckrodt*, there is no

such conflict: no case finds exhaustion or establishes an exhaustion doctrine that overrides an otherwise-valid restriction attached to a sale.

In fact, the most pertinent precedent of this Court, *Mitchell*, long ago established the *contrary* view. The Government itself recognizes that *Mitchell* permits patentees to preserve patent rights by limiting the rights transferred. USBr. 12-14.[2] Although the Government would limit *Mitchell* to mere licenses to use, distinguishing "sales" under restrictions, USBr. 13, that reading is inconsistent with the Court's own characterization in *Mitchell*. Not only, as the Government recognizes (USBr. 16), does *Mitchell* state the exhaustion principle for patentees who have "*sold*" a patented machine "without any conditions." 83 U.S. at 547 (emphasis added). But *Mitchell* repeatedly describes what occurred as *sales* of the hat-felting machines, under use restrictions.[3] Not sur-

---

[2] Although the Petitioners' Reply Brief (at 3) suggested that *Mitchell* was overruled in *Motion Picture Patents Co. v. Universal Film Mfg. Co.*, 243 U.S. 502 (1917)–itself superseded in part by statute, *see Illinois Tool Works Inc. v. Independent Ink, Inc.*, 126 S. Ct. 1281, 1290-91 (2006)–that is not so. The Court relied on *Mitchell* expressly in *General Talking Pictures Corp. v. Western Elec. Co.*, 305 U.S. 124, 127 (1938), and *United States v. General Elec. Co.*, 272 U.S. 476, 489 (1926), and implicitly in *Univis*, 316 U.S. at 251 (invoking the "cases collected in *General Talking Pictures* . . . , 305 U.S. 124, 128, note 1," including *Mitchell*'s "without any conditions" statement of exhaustion from sales).

[3] 83 U.S. at 549 (Bayley "sold the machines" to Mitchell et al. in 1864); *id.* ("purchasers"; "the four machines which [Mitchell et al.] purchased"; "the purchase"); *id.* at 550 ("the purchasers"); *id.* at 551 ("the purchasers"); *id.* (terms of sale to "the purchasers were sufficient to put them upon inquiry" about the limited use rights).

The sales were condition*ed*, not "conditional" (USBr. 16); the latter concept does not appear in *Mitchell*. The Government's highlighting of parts of quotes (USBr. 13) mistakenly suggests that the Court said that Bayley neither did nor could sell the machines. None of the quotes say that, and the Court repeatedly described the machines as having been sold.

prisingly, the important 1890 Robinson treatise expressly recognizes that, under *Mitchell* and other authorities, a condition can indeed prevent loss of patent rights in a "sale." 2 W. Robinson, *The Law of Patents* § 824 at 617-24 (1890). As the Government notes (USBr. 10 n.4), this Court likewise so recognized in *Henry v. A.B. Dick Co.*, 224 U.S. 1, 19-25 (1912).[4]

A view of exhaustion as an unalterable loss of patent rights is also strongly undermined by this Court's express treatment of both the 1942 *Univis* decision and the prominent exhaustion case of *Adams v. Burke*, 84 U.S. 453 (1873), as involving an "implied license to use." *Aro*, 377 U.S. at 484. That treatment properly views exhaustion as a species of "implied license," subject to lawful action that cancels the implication. Further, a rigid distinction between use licenses and conditioned "sales" is out of step with the law's broader recognition that property is a "bundle" of different rights a person may have, and may separately decide to sell, in a particular article. *See United States v. Craft*, 535 U.S. 274, 278 (2002); *Andrus v. Allard*, 444 U.S. 51, 66 (1979).

Against all the foregoing, the Government cannot point to any precedent of this Court that conflicts with the *Mallinckrodt* rule that otherwise-valid conditions can avoid exhaustion. Most of the Government's quotations merely state the general

---

What Bayley could (and did) not sell was the machines *with* the post-May 1867 use rights at issue.

[4] Although the Government suggests otherwise (USBr. 10 n.4), neither the elaboration of general principles in *A.B. Dick* nor the decision in toto was overruled in *Motion Picture Patents*, which repudiated only *A.B. Dick*'s holding that patent law protected even a particular kind of restriction, namely, a tying arrangement involving nonpatented articles. *Motion Picture Patents*, 243 U.S. at 518. Any claim of general overruling is flatly inconsistent with this Court's repeated reliance on *A.B. Dick*'s legal analysis since *Motion Picture Patents*. *E.g.*, *Metro-Goldwyn-Mayer Studios Inc. v. Grokster, Ltd.*, 545 U.S. 913, 932-33, 935, 943 (2005); *Christianson v. Colt Indus. Operating Corp.*, 486 U.S. 800, 808 (1988).

exhaustion principle *where no restriction attached to the sale was even at issue*, and thus could not and do not determine the effect of such a restriction. USBr. 6-10, 16.[5] Ultimately, therefore, the Government must rely on the 1942 *Univis* decision to seek support for exhaustion as limiting "the patent right in a manner that cannot be extended or altered by the parties" through otherwise-valid restrictions. USBr. 11. But *Univis* does not establish or even state such a doctrine.

All that *Univis* held was that patent rights were not preserved by sale restrictions that *were otherwise illegal* (under the Sherman Act). *Mallinckrodt* does not conflict with that holding but expressly incorporates it. 976 F.2d at 708. That is enough to defeat reliance on *Univis* as conflicting with *Mallinckrodt* and thus justifying review.

---

[5] The Government (USBr. 7, 17) misreads dicta in *Keeler v. Standard Folding-Bed Co.*, 157 U.S. 659, 741 (1895), as stating that sale restrictions are enforceable only as contracts, and not preserving patent rights. *Keeler* noted that "[w]hether a patentee may protect himself and his assignees by special contracts brought home to the purchasers *is not a question before us*" but that "such a question would arise as a question of contract, and not as one under *the inherent meaning and effect* of the patent laws." (emphasis added). That statement does not limit enforceability of sale restrictions to contract law: it says only that curtailing the use rights of a purchaser requires a licensing restriction, as such curtailment is not "inherent" in patent law itself, *i.e.*, the default of exhaustion must be overcome. Indeed, *Hobbie v. Jennison*, 149 U.S. 355, 363-64 (1893), said in dicta that "[i]t is easy for a patentee to protect himself . . . . He can take care to bind every licensee or assignee, if he gives him the right to sell articles made under the patent, by imposing conditions . . . ."

In *Bloomer v. McQuewan*, 55 U.S. 539 (1853), also cited at USBr. 7, 17, there was no question of use in violation of a restriction imposed on a sale: the question was use after a certain time, but "[t]he right to construct and use these planing machines, had been purchased and paid for without any limitation as to the time for which they were to be used." 55 U.S. at 553. And *Motion Picture Patents*, cited at USBr. 7, which involved tying, made a statement limited in terms to nonpatented articles ("supplies") to be used with the patented machine. 243 U.S. at 509.

In addition, even the Court's reasoning in *Univis* is narrower than the Government suggests. *First*, in reasoning that the sale of lens blanks conferred a "license" to practice the patents on finished lenses, the Court did not assert a legal consequence of any first sale regardless of patentees' terms of sale; rather, it expressly relied on the *particular* terms of sale, immediately tying its "license" conclusion to the patentee's choice to seek no further payment for the lens blanks. 316 U.S. at 249-50; *see id.* at 245. *Second*, the Court's reasoning treated the sales at issue as without legally cognizable conditions. Seemingly reflecting the idea that sale restrictions that are independently illegal may not be invoked to negate a patent-practicing authority otherwise implied from the sale, the Court evidently put aside the challenged price-fixing restrictions for its patent discussion and treated the patentee's sale of blanks to finishers as if it "had sold the blanks to a wholesaler or finishing retailer, *without more*." 316 U.S. at 251 (emphasis added). Nowhere does *Univis* say that patent rights cannot be preserved by any otherwise-valid restriction. Accordingly, the Government's view of precedent as possibly conflicting with the Federal Circuit view of conditioned sales is incorrect.[6]

Significantly, the Government's *sole* concern is one of precedent. The Government cites no statutory or policy basis for barring a patentee from preserving its rights by imposing on sales a restriction that itself violates no antitrust or other proscription. And there is no such basis.

---

[6] After *Univis*, Congress in 1952 enacted 35 U.S.C. § 271(d)(2) to state that a patentee "otherwise entitled to relief" for direct infringement shall not "be denied relief" ("or" be found guilty of "misuse") on the very basis asserted here to trigger exhaustion—licensing sale of nonpatented components with no substantial noninfringing use. *See* USBr. 20 n.7. The Federal Circuit, not presented with Section 271(d)(2), has not yet addressed the provision's meaning in the present situation.

The statute grants relevantly unqualified exclusivity rights to patentees, 35 U.S.C. §§ 154, 271, and the Government cites nothing in the Patent Act that restricts the patentee's *general* control over how it will parcel out those rights and collect compensation—subject to condemnation for violation of any legal constraint on *particular* conditions. Nor is there any policy justification for the version of exhaustion that petitioners promote. Such a doctrine would judicially displace the marketplace freedom of patentees and technology users to negotiate separate payments at separate market levels to meet differing economic circumstances (rather than forcing a component maker to pay the full value and build that cost into *its* prices), or would treat use licenses as sharply different from restricted "sales" (which could increase uncertainty by producing litigation over formalities despite, as here, the clarity of the restrictions as a substantive matter). No justification has been established for such judicial restrictions on the workings of the market for exercising patent rights—which, of course, are presumed valid for present purposes. Thus, the *Mallinckrodt* rule is sound and—in the absence of any demonstrated problem or a true conflict with this Court's precedents—should not be reviewed or disturbed.

CONCLUSION

The petition for a writ of certiorari should be denied.

Respectfully submitted,

RICHARD G. TARANTO
(Counsel of Record)
FARR AND TARANTO
1220 19th Street, NW
Suite 800
Washington, DC
(202) 775-0184

September 4, 2007

-74

55087
~~53000~~

Supreme Court, U.S.
FILED
NOV 5 - 2007
OFFICE OF THE CLERK

79pg (15

No. 06-937

In the
Supreme Court of the United States

QUANTA COMPUTER, INC., QUANTA COMPUTER USA, INC., Q-LITY COMPUTER, INC.,
PETITIONERS,

v.

LG ELECTRONICS, INC.,
RESPONDENT.

ON WRIT OF CERTIORARI TO THE UNITED STATES COURT OF APPEALS
FOR THE FEDERAL CIRCUIT

SUPPLEMENT TO THE JOINT APPENDIX
(Pages 199 to 267)

Counsel for Petitioner

MAUREEN E. MAHONEY
Counsel of Record
J. SCOTT BALLENGER
MELISSA B. ARBUS
ANNE W. ROBINSON
LATHAM & WATKINS LLP
555 11TH STREET, N.W.
SUITE 1000
WASHINGTON, DC 20004
(202) 637-2200
(202) 637-2201 (FAX)
maureen.mahoney@lw.com

Counsel for Respondent

CARTER G. PHILLIPS
Counsel of Record
VIRGINIA A. SEITZ
JEFFREY T. GREEN
JEFFREY P. KUSHAN
SIDLEY AUSTIN LLP
1501 K STREET, NW
WASHINGTON, DC 20005
(202) 736-8015
(202) 736-8711 (FAX)
cphillips@sidley.com

Additional Counsel Listed on Inside Cover

Additional Counsel for Petitioner

TERRENCE D. GARNETT
VINCENT K. YIP
PETER WIED
PAUL, HASTINGS, JANOFSKY & WALKER LLP
515 SOUTH FLOWER STREET
25TH FLOOR
LOS ANGELES, CA 90071
(213) 683-6000

MAXWELL A. FOX
PAUL, HASTINGS, JANOFSKY & WALKER LLP
34 F ARK MORI BUILDING
P.O. BOX 577
12-32 AKASAKA 1-CHOME
MINATO-KU, TOKYO 107-6034
JAPAN
813 6229 6100

JOINT APPENDIX
TABLE OF CONTENTS – VOL. I

Page

United States Court of Appeals for the Federal Circuit Relevant Docket Entries: *LG Electronics v. Bizcom Electronics*, No. 05-1261 1

United States District Court for the Northern District of California Relevant Docket Entries: *LG Electronics, Inc. v. Q-Lity Computer Inc., et al.*, No. 4:01-cv-02187-CW 7

Complaint, *LG Electronics Inc. v. Q-Lity Computer Inc., Quanta Computer, Inc. and Quanta Computer USA, Inc.* (N.D. Cal. Apr. 16, 2001) 134

September 4, 2000 Letter from John Matheson to David Shing, attached to Declaration of David M. Morris in Support of LGE's Cross-Motion for Partial Summary Judgment (N.D. Cal. May 3, 2002) (A 3960[1]) (bates number omitted in printing) 143

JOINT APPENDIX
TABLE OF CONTENTS – VOL. II
(UNDER SEAL)

Page

Patent Cross License Agreement Between LG Electronics, Inc. and Intel Corporation, Exhibit A to Declaration of Maxwell A. Fox in Support of Defendants Q-Lity Computer Inc., Quanta Computer Inc., and Quanta Computer USA, Inc.'s Motion For Partial Summary Judgment (N.D. Cal. May 3, 2002) (A 3605-3619) (bates numbers omitted in printing) 145

Master Agreement with Attachments A-C, Exhibit B to Declaration of Maxwell A. Fox in Support of Defendants Q-Lity Computer Inc., Quanta Computer Inc., and Quanta Computer USA, Inc.'s Motion For Partial Summary Judgment (N.D. Cal. May 3, 2002) (A 3621-3632) (bates numbers omitted in printing) 174

---

[1] "A ___" refers to the Joint Appendix filed in the Federal Circuit.

SUPPLEMENT TO THE JOINT APPENDIX
TABLE OF CONTENTS

Page

United States Patent No. 4,939,641, Multi-Processor System with Cache Memories (July 3, 1990) (A 139 to A 159) 199

United States Patent No. 5,077,733, Priority Apparatus Having Programmable Node Dwell Time (Dec. 31, 1991) (A 160 to A 183) 220

United States Patent No. 5,379,379, Memory Control Unit with Selective Execution of Queued Read and Write Requests (Jan. 3, 1995) (A 204 to A 227) 244

ITEMS PREVIOUSLY REPRODUCED

In accordance with Supreme Court Rule 26.1, the following items have been omitted in printing this joint appendix because they appear on the following pages of the appendix to the Petition for a Writ of Certiorari (Nov. 30, 2006)

Page

Opinion, *LG Electronics, Inc. v. Bizcom Electronics, Inc., et al.*, Nos. 05-1261, 05-1262, 05-1263, 05-1264, 05-1302, 05-1303, 05-1304 (Fed. Cir. July 7, 2006) 1a

Order on Cross-Motions for Summary Judgment, *LG Electronics, Inc. v. Asustek Computer, Inc., et al.*, Nos. C 01-00326 CW, C 01-1375 CW, C 01-01594 CW, C 01-02187 CW, C 01-01552 CW (N.D. Cal. Aug. 20, 2002) 26a

Order Granting in Part Defendants' Motion for Summary Adjudication and Granting in Part Plaintiff's Motion for Summary Adjudication, *LG Electronics, Inc. v. Asustek Computer, Inc., et al.*, Nos. C 01-00326 CW, C 01-1375 CW, C 01-01594 CW, C 01-02187 CW, C 01-01552 CW (N.D. Cal. Feb. 6, 2003) 52a

ITEMS PREVIOUSLY REPRODUCED—Continued

Page

Order Addressing Cross Motions for Summary Judgment and Granting Defendants' Motion to Amend, *LG Electronics, Inc. v. Bizcom Electronics, Inc., et al.*, Nos. C 01-00326 CW, C 01-1375 CW, C 01-01594 CW, C 01-02187 CW, C 01-01552 CW (N.D. Cal. Nov. 30, 2004) 62a

Order Denying Rehearing, *LG Electronics, Inc. v. Bizcom Electronics, Inc., et al.*, Nos. 05-1261, 05-1262, 05-1263, 05-1264, 05-1302, 05-1303, 05-1304 (Fed. Cir. Sept. 1, 2006) 82a

United States Patent [19]

Schwartz et al.

[11] **Patent Number: 4,939,641**

[45] **Date of Patent: Jul. 3, 1990**

[54] **MULTI-PROCESSOR SYSTEM WITH CACHE MEMORIES**

[75] Inventors: **Martin J. Schwartz, Worcester; Robert D. Becker, Shirley, both of Mass.**

[73] Assignee: **Wang Laboratories, Inc., Lowell, Mass.**

[21] Appl. No.: **213,356**

[22] Filed: **Jun. 30, 1988**

[51] Int. Cl.[5] G06F 13/00

[52] U.S. Cl. 364/200; 364/243.4; 364/243.41; 364/259.2

[58] Field of Search ... 364/200 MS File, 900 MS File

[56] **References Cited**

U.S. PATENT DOCUMENTS

3,735,360	5/1973	Anderson et al.	364/200
3,761,883	9/1973	Alvarez et al.	364/200
3,845,474	10/1974	Lange et al.	364/200
3,967,247	6/1976	Anderson et al.	364/200
4,167,782	9/1979	Joyce et al.	364/200
4,394,732	7/1983	Swenson	364/200
4,442,487	4/1984	Fletcher et al.	364/200
4,464,712	8/1984	Fletcher	364/200
4,527,238	7/1985	Ryan et al.	364/200
4,531,799	11/1985	Ryan et al.	364/200
4,602,368	6/1986	Circello et al.	364/200
4,675,811	6/1987	Kishi et al.	364/200
4,685,082	8/1987	Chang et al.	365/49
4,811,209	3/1989	Rabuzzin	364/200

OTHER PUBLICATIONS

Cousier & Feautrier, A New Solution to Coherence Problems in Multicache Systems, IEEE Transactions on Computers, vol. C-27, No. 12, 9/78, pp. 1112-1118.

"Cache Memories", by Alan Jay Smith, Computer Surveys, vol. 14, No. 3, Sep. 1982.

"16-KBobyte Cache/Memory Management System", Motorola SemiConductor Technical Data Brochure.

Primary Examiner—David Y. Eng

Attorney, Agent, or Firm—Michael H. Shanahan

[57] **ABSTRACT**

A system is described wherein a CPU, a main memory means and a bus means are provided. Cache memory means is employed to couple the CPU to the bus means and is further provided with means to indicate the status of a data unit stored within the cache memory means. One status indication tells whether the contents of a storage position have been modified since those contents were received from main memory and another indicates whether the contents of the storage position may be present elsewhere memory means. Control means are provided to assure that when a data unit from a CPU is received and stored in the CPU's associated cache memory means, which data unit is indicated as being also stored in a cache memory means associated with another CPU, such CPU data unit is also written into main memory means. During that process, other cache memory means monitor the bus means and update its corresponding data unit. Bus monitor means are provided and monitor all writes to main memory and reads from main memory to aid in the assurance of system-wide data integrity.

16 Claims, 10 Drawing Sheets

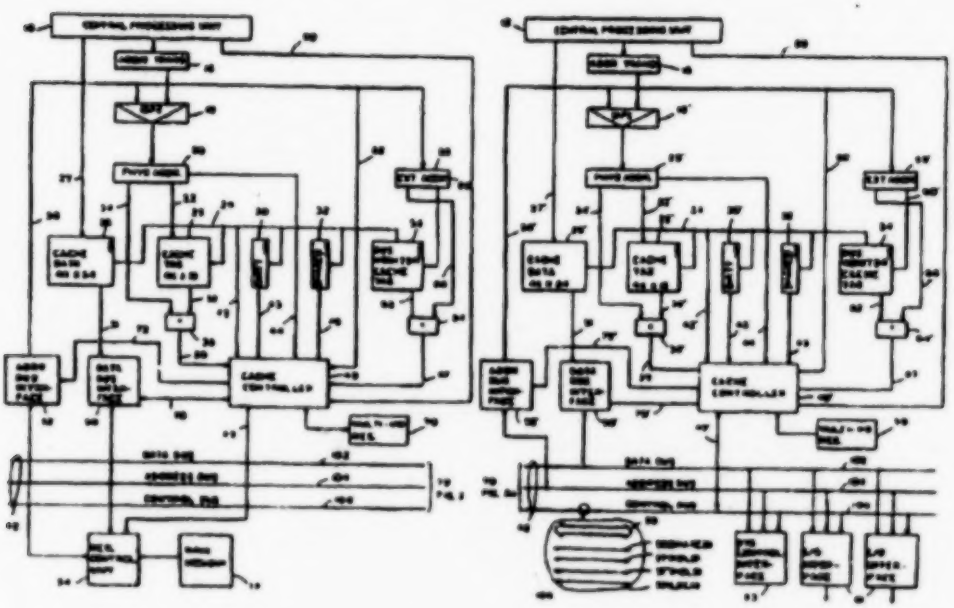

This PDF of U.S. Utility Patent 4939641 provided by Patent Fetcher™ a product of Patent Logistics, LLC Page 1 of 21

BEST AVAILABLE COPY

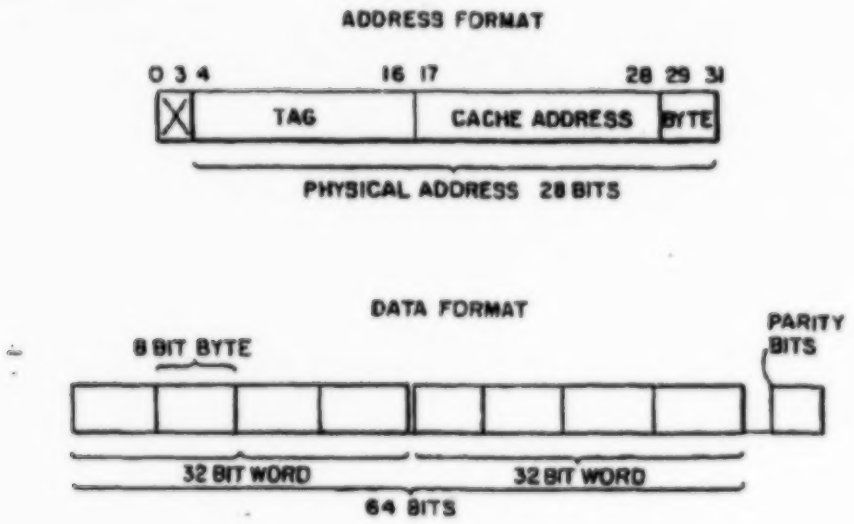

FIG. 1

This PDF of U.S. Utility Patent 4939641 provided by PatentFetcher™, a product of Patent Logistics, LLC - Page 2 of 21

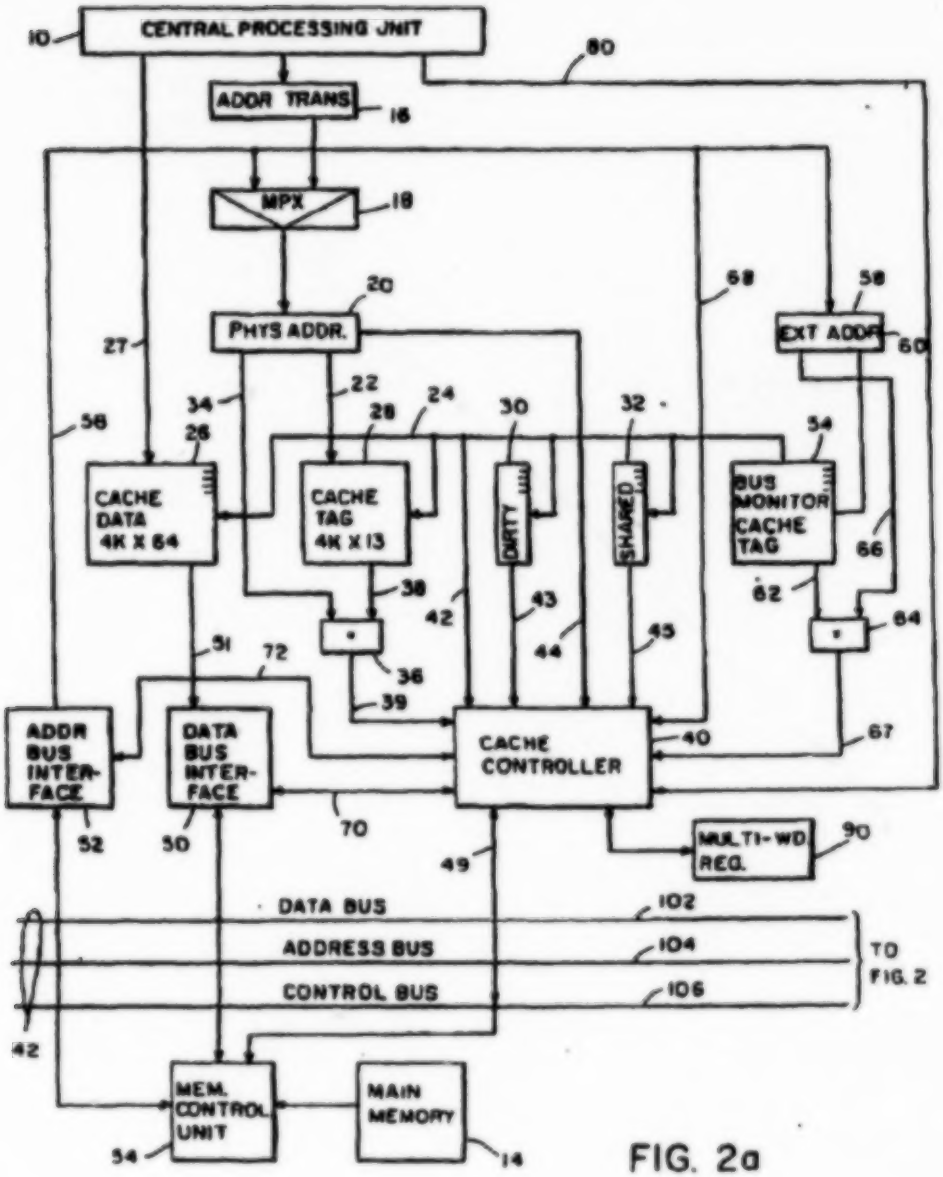

FIG. 2a

This PDF of U.S. Utility Patent 4939641 provided by Patent Fetcher™, a product of Patent Logistics, LLC - Page 3 of 21

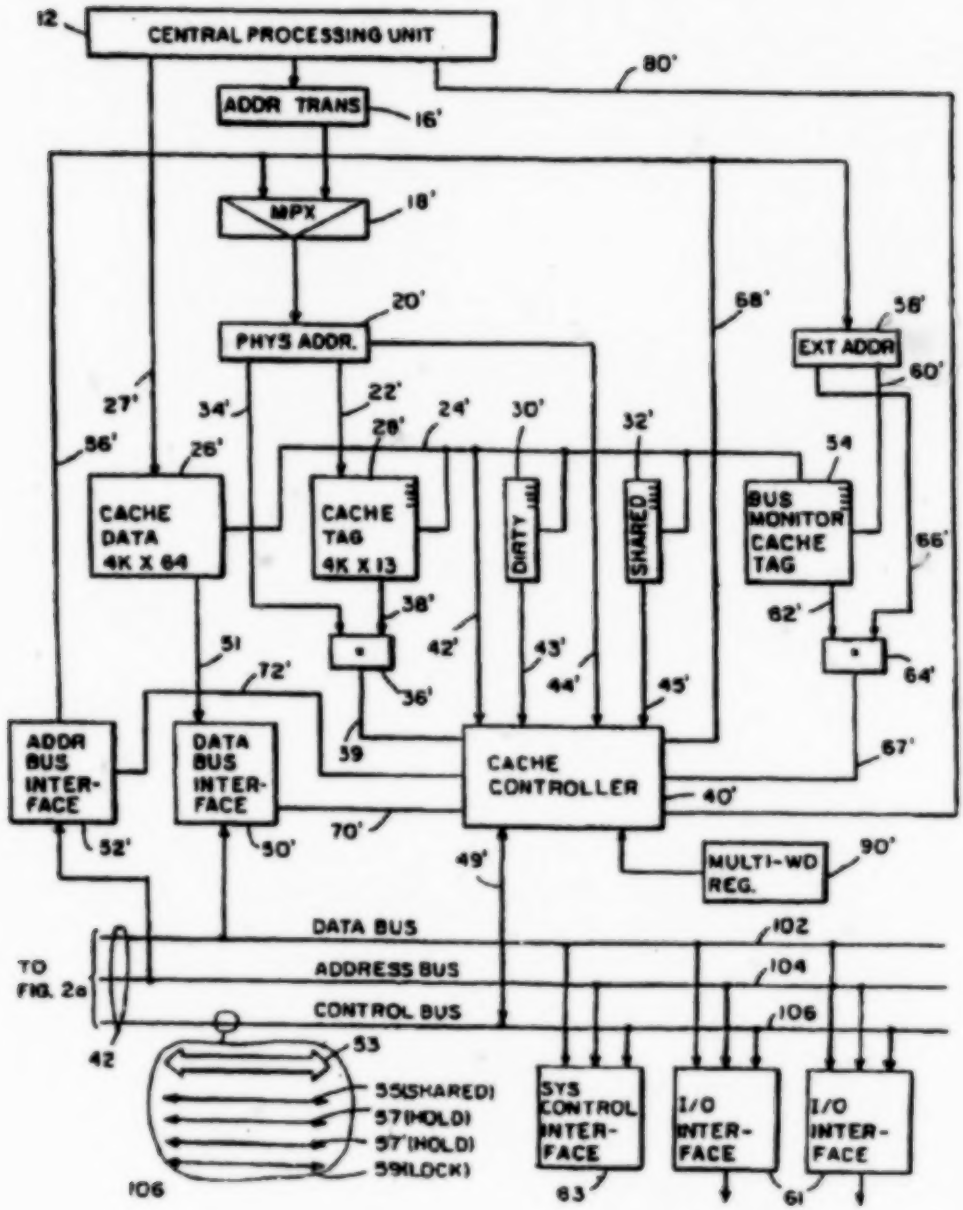

FIG. 2b

This PDF of U.S. Utility Patent 4939641 provided by Patent Fetcher™, a product of Patent Logistics, LLC - Page 4 of 21

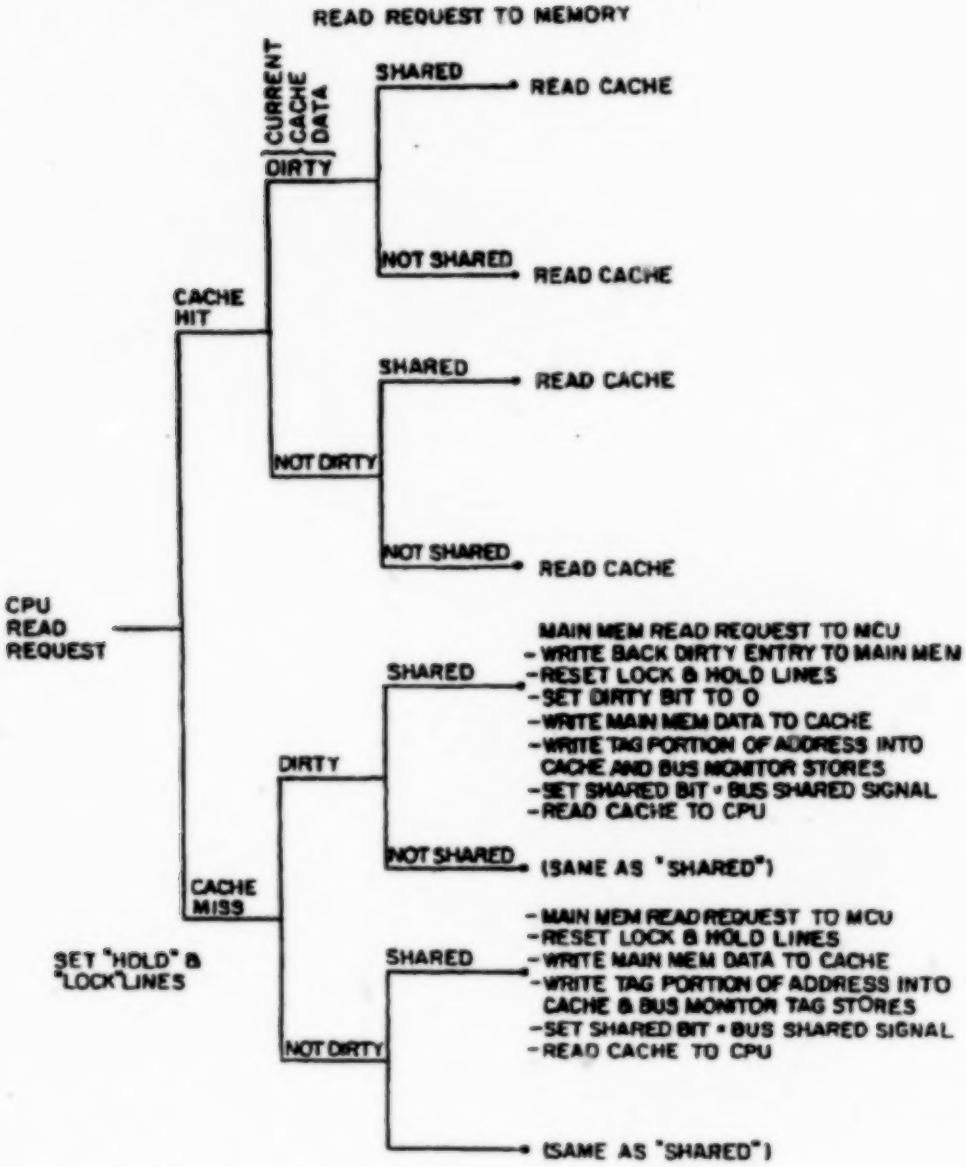

FIG. 3

This PDF of U.S. Utility Patent 4939641 provided by Patent Fetcher™, a product of Patent Logistics, LLC - Page 5 of 21

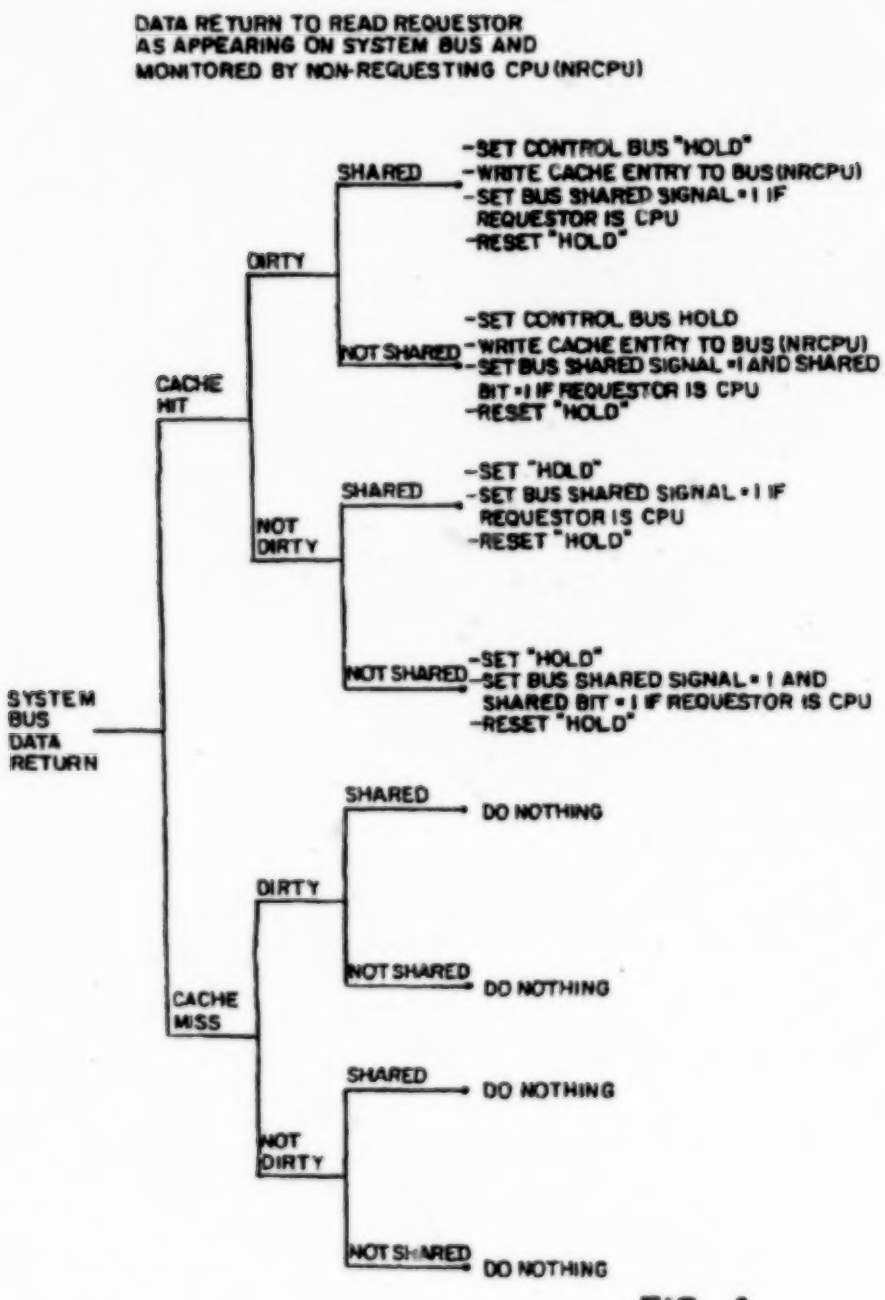

FIG. 4

This PDF of U.S. Utility Patent 4939641 provided by Patent Fetcher™, a product of Patent Logistics, LLC - Page 6 of 21

FIG. 5

This PDF of U.S. Utility Patent 4939641 provided by PatentFetcher™, a product of Patent Logistics, LLC - Page 7 of 21

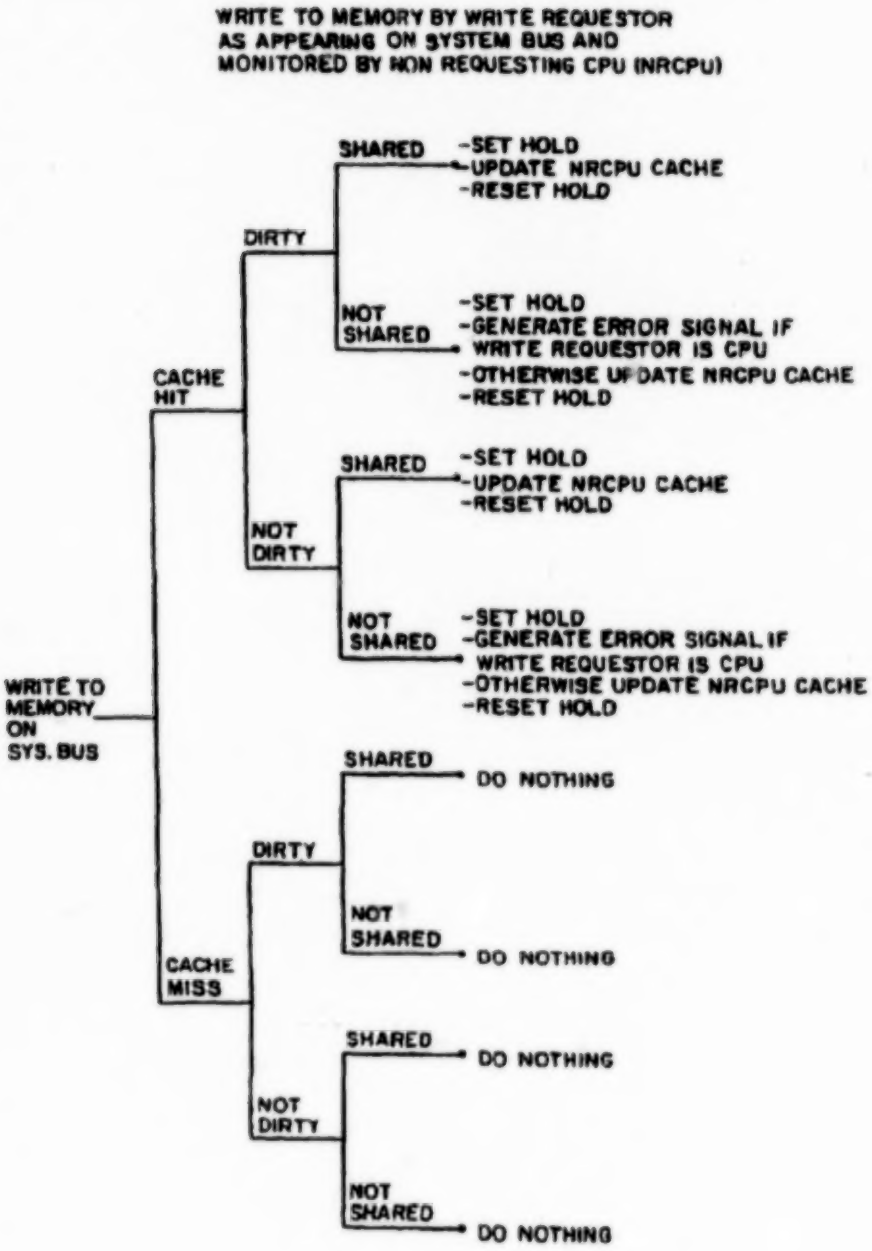

FIG. 6

This PDF of U.S. Utility Patent 4939641 provided by Patent Fetcher™, a product of Patent Logistics, LLC - Page 8 of 21

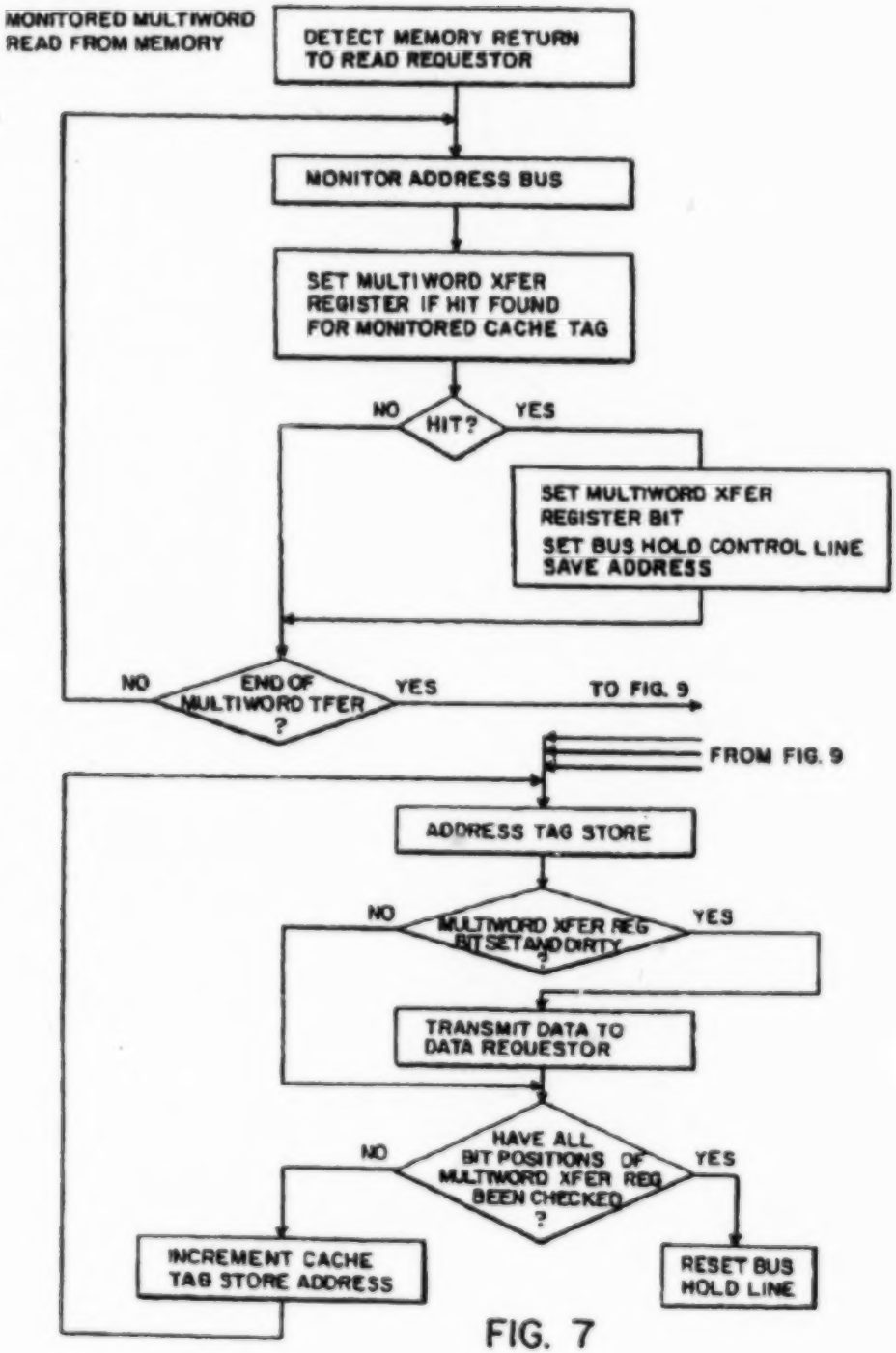

FIG. 7

This PDF of U.S. Utility Patent 4939641 provided by Patent Fetcher™, a product of Patent Logistics, LLC - Page 9 of 21

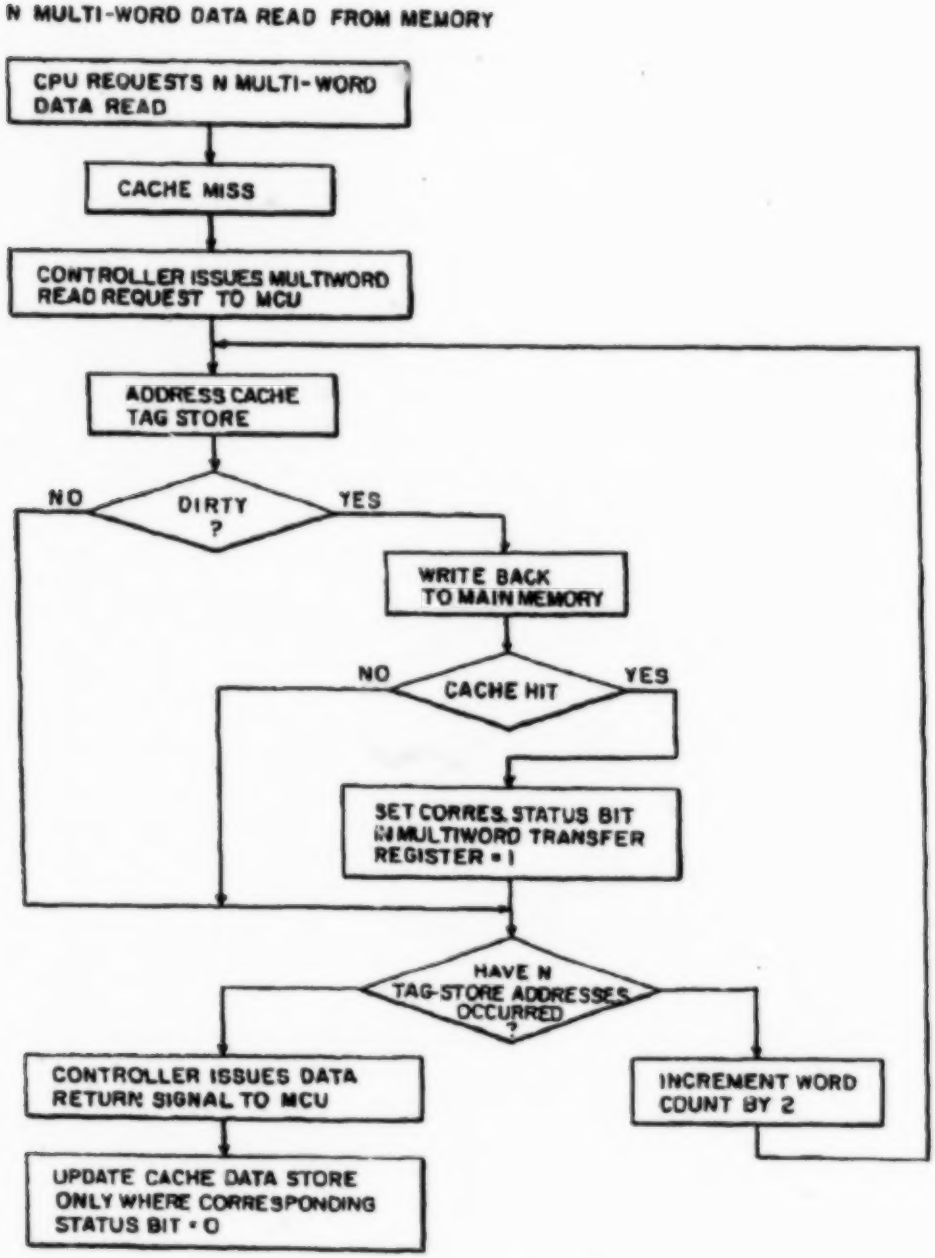

FIG. 8

This PDF of U.S. Utility Patent 4939641 provided by Patent Fetcher™ a product of Patent Logistics, LLC Page 10 of 21

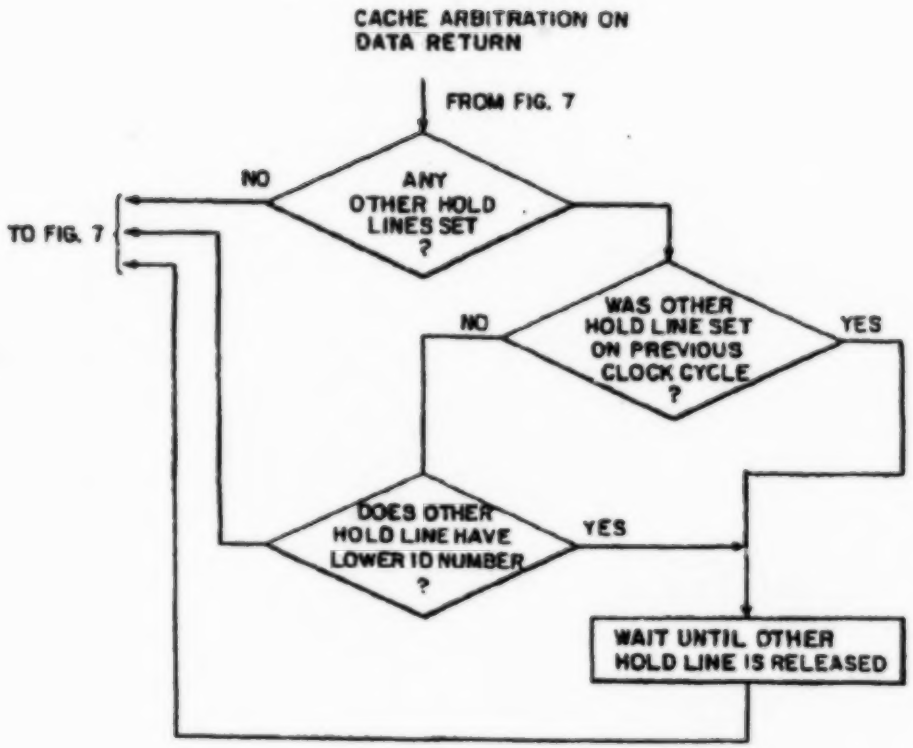

FIG. 9

This PDF of U.S. Utility Patent 4939641 provided by Patent Fetcher™, a product of Patent Logistics, LLC - Page 11 of 21

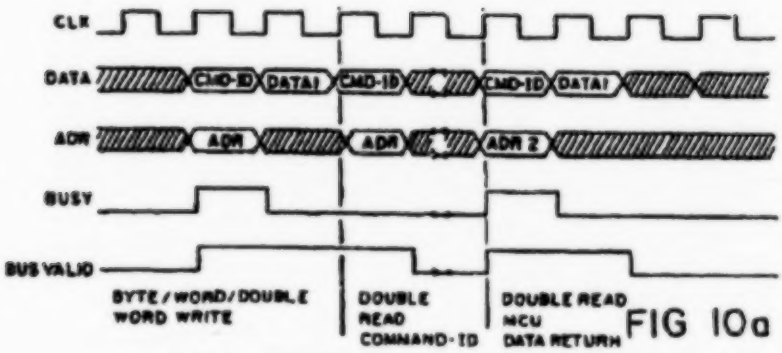

FIG 10a

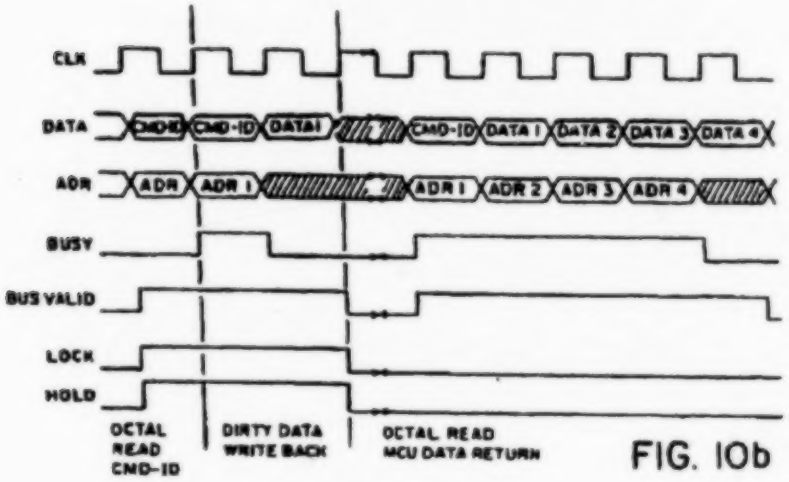

FIG. 10b

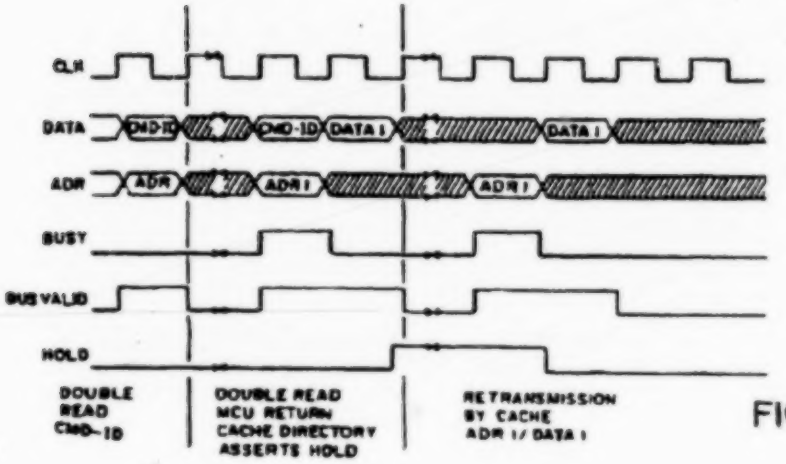

FIG. 10c

This PDF of U.S. Utility Patent 4939641 provided by Patent Fetcher™, a product of Patent Logistics, LLC - Page 12 of 21

MULTI-PROCESSOR SYSTEM WITH CACHE MEMORIES

I. FIELD OF THE INVENTION

This invention relates to multi-processor computing systems which employ cache memories and more particularly to means and methods for maintaining data integrity therein.

BACKGROUND OF THE INVENTION

The use of high speed, small capacity cache memory systems is well known. While there are a variety of cache memory systems, several of the better known are termed "write through" caches and "write back" caches. In a write through cache, data is written into main memory at the same time it is written into the cache. Thus, the cache always contains identical data to that stored in main memory and data integrity (coherency) is maintained throughout the system. The problem with write through architecture is that it creates an excessive amount of bus traffic, in that a write to main memory occurs every time there is a write to the write through cache. A positive aspect of this architecture is that it is always known where the most updated data resides, i.e., everywhere.

In an architecture employing a write back cache, the amount of traffic on the bus is significantly reduced. Initially, data is written into the write back cache from main memory and is then used by the central processing unit (CPU) for operations. When the CPU writes the data back into the cache and assuming it has been modified, a "dirty" bit is set to indicate that the data is now unique to that cache and is different from that which resides in main memory. In such a cache, in general, no immediate effort is made to write the revised data into the main memory to maintain data integrity. Obviously then, it is the dirty bit which is critical to the maintenance of data coherence. So long as a write back cache is utilized with only one processor, data management is straight forward. However, when more than one central processor uses the same main memory, data management problems multiply.

In such systems, there is often more than one cache memory present. Each entry position in a cache is provided with a valid/invalid bit. If a CPU sees that another cache is writing to memory and finds that its cache contains an identical data address, it invalidates its own cache entry rather than updating it. Thus, when a CPU accesses its cache at that particular data address, it finds an invalid entry and is redirected to main memory, a time consuming process.

It is therefore an object of this invention to maintain data integrity in a multi-processor/cache environment without requiring exclusive access to main memory.

It is another object of this invention to enable a number of CPU's to access data via their associated cache memories with each processor knowing that it is always accessing the most updated data.

It is still another object of this invention to provide a multi-processor system employing write back caches wherein main memory accesses are minimized while simultaneously maintaining data integrity throughout the system.

It is a further object of this invention to provide a cache memory system wherein the use of valid/invalid data indicators are avoided.

SUMMARY OF THE INVENTION

A multi-processing system is described wherein at least two CPU's, a main memory means and a bus means are provided. Cache memory means are employed to couple each CPU to the bus means and are further provided with means to indicate the status of a data unit stored within the cache memory means. One status indication tells whether the contents of a storage position have been modified since those contents were received from main memory and another indicates whether the contents of the storage position may be present in another cache memory means. Control means are provided to assure that when a data unit from a CPU is received and stored in the CPU's associated cache memory means, which data unit is indicated as being also stored in a cache memory means associated with another CPU, such CPU data unit is also written into main memory means. During that process, other cache memory means monitors the bus means and updates its corresponding data unit. Bus monitor means are provided for each cache memory means and monitor all writes to main memory and reads from main memory to aid in the assurance of system-wide data integrity.

DESCRIPTION OF THE DRAWINGS

FIG. 1 shows both the address and data formats for the data processing system embodying the invention.

FIGS. 2a and 2A in combination, illustrate a high level block diagram of the invention.

FIG. 3 is a decision tree indicating the sequence of events which occur during a CPU read request to memory.

FIG. 4 is a decision tree indicating the sequence of events initiated when a non-requesting CPU/cache monitors on the system bus a data return to a read-requestor.

FIG. 5 is a decision tree indicating the sequence of events which occur during a CPU write to memory.

FIG. 6 is a decision tree which indicates the sequence of events which occur when a non-requesting CPU/cache monitors a write to memory by a write requestor.

FIG. 7 is a flow chart indicating the sequence of events which occurs when a non-requesting CPU/cache monitors a multi-word read from memory to a requesting CPU/cache.

FIG. 8 is a flow chart illustrating a multi word data read from memory.

FIG. 9 is a flow chart illustrating the arbitration which occurs between caches on a data return.

FIGS. 10a, 10b and 10c are timing diagrams useful in understanding the invention.

DETAILED DESCRIPTION OF THE INVENTION

The data processing system of this invention employs address and data formats shown in FIG. 1. A byte comprises 8 bits and a word 4 bytes. Each position in memory is adapted to store two words ("double word") and is addressable at the byte level. Any byte may be individually addressed, read and/or written as can any combination of bytes, words and double words. Normally, unless otherwise instructed, data transfers in this system comprise double words.

With respect to address formats, 28 bits are actively used and comprise a physical address in main memory where a subset of data (e.g. a byte) is to be found. Portions of the physical address are employed to access and identify positions within a write-back cache memory.

This PDF of U.S. Utility Patent 4939641 provided by Patent Fetcher™, a product of Patent Logistics, LLC - Page 13 of 21

Each cache uses 12 bits of the physical address, (i.e., bits 4–16) to identify a data word and those 12 bits are called the tag. Another portion of the physical address, i.e., bits 17–28, is employed to provide an address to a storage position within the cache memory (called the cache address). Thus, while the cache address references a storage position within the cache memory, the tag identifies data actually stored at that storage position.

An access into a cache memory commences with the arrival of a physical address from the CPU. The cache employs the cache address to access one of its memory positions. Subsequently, the tag portion of the received physical address is compared with the tag portion of the data stored at the cache address to determine if there is a match, thus indicating that a "hit" has occurred and the proper data to be either accessed, written over or otherwise altered or utilized is the data actually designated by the physical address. If no match is found, (i.e., a "miss") the typical response of the system is to generate a read request to main memory for the requested data.

As above stated, the data format, is two words in length, with each word being 32 bits and comprising 4 eight bit bytes. There are also parity bits associated therewith but these are not relevant to a discussion of this invention.

It should be kept in mind during the following description, that the invention maintains data integrity by assuring that cache data is always the most up-to-date in the system. Thus, there never is a "valid" or "invalid" indication with respect to any cache data as it is always assured that if data is provided by a cache, that it invariably is valid (i.e. most up-to-date).

By contrast, cache systems which employ valid and invalid indicators unnecessarily multiply the number of cache misses which occur when an invalid data unit is addressed. In such systems, a valid data unit is fetched, placed in the cache and then provided to the requestor. This invention avoids those unnecessary memory cycles; avoids the need for any directory or other listing of valid and invalid data and avoids any requirement that its memory controller keep records of cache operations.

In the cache memories of this invention, indications are associated with each cache data word of its state of modification (if any) since being accessed from main memory, (e.g. "dirty" or "not dirty") and whether it also may reside in another cache store (e.g. "shared" or "not shared"). These indications enable the system to continuously update the cache data words and assures that they are updated when they are called for. Even in the case where a cache store is found not to have the requested data, if such data is resident in another cache store, provisions are made for its immediate transfer to the requested cache store.

The invention further avoids the necessity for the provision of special procedures when more than one CPU wishes to simultaneously modify bytes in a single word. This invention accomplishes such modifications during the normal course of its operations.

Since, by definition, data in the caches of this system is the most up-to-date, when system operation is initiated, each of the caches must be filled with data. This is accomplished by arbitrarily selecting data from main memory and writing it into each cache store, it being remembered, that at system start-up, main memory data is considered most up-to-date. The system then commences further operations as described hereinafter.

Turning to FIG. 2, a high level block diagram is shown of a multi processor system that includes at least two CPU's 10 and 12. Each CPU typically operates with a virtual addressing system; however, when internal CPU and memory operations are carried out, the virtual addresses are converted to physical addresses which indicate the actual address positions within main memory 14 where the data designated by the address is stored. The address conversion occurs in address translators 16 and 16' with the resulting physical address being passed via multiplexors 18 and 18' to physical address registers 20 and 20'. As each of the CPU's, along with their associated cache memory systems, are identical, CPU 10 will hereinafter be described in detail with it being understood that CPU 12 is identical and is numbered in an identical manner with prime numbers.

The portion of the physical address resident in physical address register 20 which corresponds to the cache address (i.e. bits 17–28) is fed via cable 22 to cache bus 24. Also connected to cache bus 24 is cache data store 26, cache tag store 28, "dirty" bit store 30, "shared" bit store 32 and bus monitor cache tag store 34. A cable 27 provides for direct entry of data from CPU 10 to cache data store 26. Cache data store 26 is typically a 32K byte memory that is 4K lines deep by 64 bits wide (8 bytes). Each line of this cache stores a double word. Cache tag store 28 is typically 4K lines deep by 13 bits wide and stores the tag portion of the physical address, which tag defines the address where the corresponding data is stored in cache data store 26. It should be remembered that each double word of data has associated with it a physical address which is indicative of the position in main memory 14 where that double word is stored. Thus, each line of cache tag store 28 corresponds in position to a data storage address in cache data store 26 and contains the tag portion of the physical address associated with the data stored at such cache data store address.

Dirty bit register 30 and shared bit register 32 are each also 4K lines deep. A "1" bit on any line of dirty bit register 30 indicates that data in data in the corresponding line of cache data store 26 is more up to date than data in the corresponding storage location in main memory 14. A "0" setting on any line of dirty bit register 30 indicates that the corresponding entry in cache data store 26 is the same as that appearing at that location in main memory (with one exception to be hereinafter described). A bit set to 1 on any line of shared bit register 32 indicates that another cache in the system might contain the same entry. A bit set to 0 on any line of shared bit register 32 indicates that no other cache has the same entry.

Referring back to physical address register 20, cable 34 accesses the tag portion (bits 4–16) of the physical address and presents it to comparator 36. Cable 38 from cache tag store 28 also presents to comparator 36 a selected tag stored therein. If a comparison occurs, indicating that the tags are identical (a hit), a signal is sent via line 39 to cache controller 40.

While cache controller 40 and other operational and control entities, are, for illustration purposes, shown as independent entities, it should be understood that their functions, to be hereinafter described, may be incorporated into a CPU and not appear as totally independent entities.

Cables 42 and 44 provide to cache controller 40 the cache address bits from cache bus 24 and the complete physical address from register 20, respectively. Lines 43

This PDF of U.S. Utility Patent 4939641 provided by Patent Fetcher™, a product of Patent Logistics, LLC - Page 14 of 21

and 48 respectively provide the means for setting and reading out to cache controller 40, the dirty and shared bits respectively. Cache controller 40 also provides signals via cable 42 to cache bus 24 which control the read in and read out of data from cache data store 26, cache tag store 28, dirty bit register 30, shared bit register 32 and bus monitor cache tag store 34.

Communications between the main elements of the system shown in FIG. 2 occur on system bus 42. In actuality, system bus 42 is comprised of 3 separate bus systems, i.e., data bus 182, address bus 184 and control bus 186. Control bus 186 is in turn comprised of main control lines 53, shared line 58 (which is connected to all cache controllers), bus lock line 59 (which is monitored by all units connected to system bus 42) and hold lines 57 and 57'. Hold line 57 emanates from cache controller 40 and hold line 57' emanates from cache controller 40. Both hold lines 57 and 57' are monitored by all units connected to system bus 42.

Each hold line 57, 57' and lock line 59 performs somewhat similar functions (i.e. exclusion of others from the system bus). When a cache controller asserts its hold line, all other potential users of the system bus are kept off the bus until the hold line is released. For instance (as will hereinafter be described in detail), it will sometimes be the case that a cache controller, in monitoring the system bus 42, will detect that a more recent version of the data being returned to another requestor is also present in its own cache store. In such case the monitoring cache controller will set its hold line which indicates to the data requestor, that more data may be coming and not to release its connection to the system bus. Thus the hold line effectively prevents any subsequent independent transaction from occurring until the data requestor is assured of having received the most updated data available.

With respect to bus lock line 59, an entity connected to the bus must request access to it and is granted that access only after the system ensures that no other entity having higher priority is queued up and waiting with a similar request. Once an entity is granted access to bus lock line 59 and asserts it, only the asserting entity and memory control unit 54 have access to the system bus. Thus when the asserting entity issues a read request, memory control unit 54 can respond without fear of any other entity having an opportunity to access the main memory and to change the requested data. When the particular operation or operations are concluded, bus lock line 59 is released and becomes available to any other requesting entity.

Data bus 182 carries data between all main subsystems (e.g. between the cache memory systems and main memory 14). Each cache memory is provided with a data bus interface 50 which provides access to and from data bus 182. In a like manner, address bus 184 is accessed by each cache memory via an address bus interface 52. Control bus 186 is connected via cable 49 to cache controller 40 and provides the necessary traffic pathways for various system control signals. Each of busses 182, 184 and 186 is also connected to memory control unit 54 which manages all main memory operations. Each of busses 182, 184 and 186 further connected to I/O interfaces 61 which control all transfers between connected input/output devices and the various system busses; and to system control interface unit 63 which provides system initialization control and diagnostics.

An important portion of each cache memory for assuring data integrity, is bus monitor cache tag store 34. Bus monitor cache tag store 34 is identical in structure to cache tag store 28 and contains an identical set of tags as are contained in cache tag store 28.

When address bus interface 52 monitors a physical address on address bus 184, it transmits that address via cable 55 to external address register 58. Output cable 60 from external address register 58 carries the cache address portion of the monitored physical address and causes the memory line corresponding thereto in bus monitor cache tag store 34 to be read out via cable 62 to comparator 64. The other input to comparator 64 occurs on cable 66 and is the tag portion of the physical address stored in external address register 58. An equivalency indication from comparator 64 is fed via lines 67 to cache controller 40. Another input to cache controller 40 is provided via cables 86 and 88 which carry the full physical address monitored by address bus interface 52. Cache controller 40 controls the operations of address bus interface 52 and data bus interface 50 via signals emplaced on lines 70 and 72. Data bus interface 50 operates in much the same manner as address bus interface 52, however it captures data appearing on data bus 182 and provides it upon command via cable 51 to cache data store 26.

Referring now to FIG. 3 (in conjunction with FIG. 2), a decision tree is illustrated showing operations which occur when CPU 18 issues a read request to main memory 14. Under such circumstances, CPU 18 issues its read request via cable 80 to cache controller 40. Previously, the physical address of the data requested to be read from memory was inserted by CPU 18 into physical address register 20. Cache controller 40 then causes the tag portion of physical address register 20 to be compared against the tags stored in cache tag register 28. If a match is found by comparator 36, a signal is provided by line 38 to cache controller 40 indicating "hit". If cache controller 40 detects no "hit" signal within a predetermined time period, it assumes that a "miss" signal has been generated and that corresponding data is not present in cache data store 26. Similarly, the cache address residing in physical address register 20 causes the dirty and shared status bits to be read out via lines 43 and 45 to cache controller 40. Thusly, cache controller 40 knows whether the data being sought is present in cache data store 26 (hit or miss); whether it is dirty or not; and whether it is shared or not.

As shown in FIG. 3, the top four branches of the decision tree all assume that the data being sought is present in cache data store 26. In such case, it is irrelevant whether it is dirty or not, or shared or not shared and cache controller 40 causes cache data store 26 to read out the requested data via cable 27 to CPU 18.

If, on the other hand, cache controller 40 detects that the requested data is not in cache data store 26 (a miss), and that the data stored at the addressed location in cache data store 26 is both dirty and shared, a series of operations are then undertaken. Initially, cache controller 40 issues a main memory read request to memory control unit 54 indicating data is required from the physical address location stored in physical address register 20. Memory control unit 54 then accesses the requested data from the physical address in main memory 14 and provides it via data bus 182 to data bus interface 50. Before that data may be written into cache data store 26, the unwanted data presently stored at that address within cache data store 26 must be saved. Since the unwanted data is "dirty", it is written back into main memory 14 via cable 51 and data bus interface 50. In

This PDF of U.S. Utility Patent 4939641 provided by Patent Fetcher™, a product of Patent Logistics, LLC - Page 15 of 21

that way, the data in main memory 14 is updated to correspond to the unwanted dirty data presently residing in the addressed position of cache data store 26. The dirty bit corresponding to that address is then reset to zero and data bus interface 50 is commanded to write the requested data (now held in data bus interface 50) into cache data store 26 at the cache address indicated by physical address 28. Simultaneously, the tag portion of the requested data is entered into cache tag store 28 and bus monitor cache tag store 54. The shared bit corresponding thereto in shared bit store 32 is then updated in accordance with the "bus shared" signal appearing on control bus 106. (the operation of which will be described hereinbelow.) Subsequently, the data newly entered into cache data store 26 is read back to CPU 10 via cable 27.

Each cache controller continuously monitors system bus 42 for two types of operations: (a) a data write to main memory 14 and (b) a data return from main memory 14 to fill a *read request*. The monitoring is independent of where the read or write request originates (e.g. a cache/CPU, a system bus interface, a system control interface, an I/O interface). It is this continuous monitoring which greatly assists the system to maintain data integrity.

Returning to FIG. 2, if it is assumed that cache controller 40 issues a data *read* signal onto control bus 106, that signal is sensed by cache controller 40' which instructs address bus interface 52, to latch the address to be subsequently placed onto address bus 46. Address bus interface 52' latches the requested physical address from the address bus and places it into external address register 58'. There, its tag portion is utilized to determine if bus monitor cache tag store 54' has a tag which compares with the address tag portion just inserted into external address register 58'. If a compare occurs, cache controller 40' sets a "hold" signal onto its hold line in control bus 106 which, in essence, tells cache controller 40 that more data is potentially on the way and not to release its system bus connection. Cache controller 40' further determines whether the corresponding data in cache data store 26' is dirty or not. If it is found to be dirty, it then causes the addressed "dirty" data in cache data store 26' to be placed onto data bus 103. Data bus interface 50 captures that data and feeds it to cache data store 26 for storage. Additionally, cache controller 40' sets a "bus shared" line on control bus 106 which indicates that the newly stored data in cache data store 26 is present in more than one location. (Obviously, if cache controller 40' had found that its data was not dirty, then no transmission to cache data store 26 would have been necessary as the data in cache data store 26' would have been identical to that being read from main memory 14).

When cache controller 40' sets the "bus shared" line to the one state, cache controller 40 also sets a shared bit in shared register 32 (which corresponds to the data just read into cache data store 26) to the one state.

Assuming now that data is to be read from a cache data store into main memory 14, such a data transfer is, as aforestated, monitored by non-associated cache controllers. (i.e., those controllers which control cache data stores other than the cache data store from which data is being read). Thus, if cache controller 40' senses a write command generated by cache controller 40 onto control bus 48, it instructs address bus interface 52' and data bus interface 50' to latch the address and data being written to main memory 14. Subsequently, a tag comparison is performed to determine if any of the tags in bus monitor cache tag store 54' are equal to the tag stored in address bus interface 52'. If so, then cache controller 40' instructs data bus interface 50' to update cache data store 26' with the new data.

Returning now to FIG. 3, the decision tree shown therein indicates that on a CPU read request, if a "cache miss", "dirty" and "not shared" sequence of findings occur, the operation is the same as when "shared" data is found. In other words whether the data is shared or not shared is irrelevant to the sequence of operations.

If however, a cache miss occurs and the data is found to be not dirty, (and shared or not shared) the sequence of operations is altered. In such a case, a main memory read request is generated by cache controller 40 to memory control unit 34 and the main memory data is written into cache data store 26. Since data at the addressed position of cache data store 26 is "not dirty" there is no need to update the identical data appearing in main memory 14. The "bus shared" line is then sampled and the shared bit is set in accordance with whether another cache controller, in response to the read request appearing on the control bus, has set the shared line to indicate that it too has the same data. Finally, the contents of cache data store 26 are read to CPU 10.

Turning now to FIG. 4, the decision tree shown therein will be helpful in understanding the operation of the system when a data return indication is monitored on the system bus by a non-requesting cache controller. As above stated, each cache controller monitors the control bus for both data reads from main memory and writes to main memory. In the instance shown in FIG. 4, it is assumed that a read from main memory 14 has been requested by cache controller 40 and that a data return response thereto has been monitored by cache controller 40'. As aforestated, cache controller 40' causes the physical address of the data being accessed to be latched in address bus interface 52'. It then determines if a cache "hit" occurs; whether the data is dirty or not dirty and whether it is shared or not shared. If the conditions hit, dirty and shared are found, cache controller 40' sets its hold line on control bus 106 and instructs cache data store 26' to write its stored data onto data bus 103 where it is picked up and stored in cache data store 26 by data bus interface 50. Cache controller 40' also sets the shared line on control bus 106 equal to one, assuming the requestor of the data is a central processing unit.

If in the case discussed above, cache controller 40' finds that the data indication in shared bit register 32' is "not shared", the process is much the same as in the shared condition however shared bit register 32' is set to one to properly indicate the shared state of the data in cache data store 26'.

If a cache hit is found but the data in cache data store 26' is found to be "not dirty", the following actions occur. If the data is found to be shared, cache controller 40' sets the bus shared line to a one, assuming the requestor is a central processing unit. If the data is found to be "not shared" the bus shared signal is also set to a one and the shared bit associated with the respective data line in cache data store 26' is set to one indicating that the data stored therein is, in fact, shared. Here again, it is assumed the requestor is a central processing unit. As is obvious, if there is a cache miss in this procedure, no actions are required.

The timing diagrams of FIGS. 18a, 18b and 18c illustrate various types of bus transactions.

This PDF of U.S. Utility Patent 4939641 provided by Patent Fetcher™ a product of Patent Logistics, LLC - Page 18 of 21

FIG. 18e shows a byte/word/double write immediately followed by the Command-ID and address portion of a double (64 bit) read followed by an MCU data return of the requested double word.

FIG. 18f demonstrates the use of both the lock and hold lines for a cache fetch/write back. That case corresponds to when a cache fetch is issued, a miss occurs and dirty data is resident in the addressed position. Thus the dirty data must be written back to main memory prior to the requested data from main memory being written into the cache store. The associated cache controller is shown asserting both its hold line and the lock line and sending command ID to MCU 54 for an octal word read. The asserted hold line prevents MCU 54 from writing into the cache store until it has been released and the asserted lock line prevents another bus connection from using the bus during this sequence. Subsequent to the write back, and release of both the hold and lock lines, MCU 54 is free to write the requested four double words to the cache store.

FIG. 18g demonstrates another use of the hold line. A bus connection is shown requesting a double word read and the MCU 54 returning the requested double word. The caches latch the address of the double word, and do directory look-ups in the following cycle. If a dirty match is found by a cache, that cache asserts hold shortly before the end of the cycle. The hold line prevents other connections from using the bus until the write-back cache re-transmits the double word along with its address and thereafter releases. The retransmission is indicated by the assertion of a bus valid signal on the system bus.

Turning now to FIG. 5, the procedures followed when a write to memory command is received from a CPU will be described. In such a case, the initial operation is much the same as when a read request is received, i.e., the physical address accompanying the write command is analyzed to determine whether the data sought to be written is either present or not present in cache data store 26 (a hit or a miss). If a hit occurs and it is found that the data is dirty and shared, cache controller 40 causes cache data store 26 and cache tag store 28 to store the respective data and tag bits. However, since it was found that the CPU is writing to a shared location, invariably, a write through action occurs to main memory 14. Thus the data, in addition to being written into cache data store 26, is also written to main memory 14 via a write command placed on control bus 106.

Assuming the shared data is still resident in cache data store 26', the write through is sensed by cache controller 40' which determines that its cache data store 26' includes data having the same tag. Cache controller 40' then instructs data bus interface 50' to update that data position with the data being written from cache data store 26 to main memory 14. (which has been captured by address bus and data bus interfaces 52' and 50' respectively). This ensures that each of the cache data stores has the most updated information. Since the main memory data and the cache data stores now contain the same information, the dirty bit is reset to 0.

If it is found that the data being written to main memory is not shared, all that is required is that the cache data store 26 be updated. Note that the dirty bit remains equal to one as the data still is not the same as that stored in main memory 14, as no write through to main memory has occurred.

If there is a cache hit and not dirty and shared indications are found, the operation is identical to that for the "cache hit", "dirty", and "shared". If the data is found to be not shared, then the cache is updated and the dirty bit is again set to one as the data in cache data store 26 differs from the data stored at the same memory position in main memory 14.

If a CPU write to memory command is received and a cache miss is found but with a dirty indication for the data already stored at the particular addressed position within cache data store 26, then a considerably more complex set of steps take place. This is irrespective of whether the data is shared or not shared. First, the main memory read request is transmitted to memory control unit 54 by cache controller 40. Then, the dirty entry in cache data store 26 is written into main memory 14. The actual data being sought to be modified is written from main memory 14 back into cache data store 26 and the cache tag store and bus monitor cache tag store are updated. The new data on cache data store 26 is then updated by the act of CPU 18 overwriting new data in the same data position. (It should be recalled that the system retains the capability to selectively overwrite a full double word, single word or any combination of bytes.) Since a write to memory signal was sensed on control bus 106, if another cache controller finds that it too has, in its associated cache data store, the data being accessed, it will set the "bus shared" line on control bus 106 indicating shared data. The bus shared signal is sensed by cache controller 40 and the shared bit in shared bit register 32 is set to one. Furthermore, the data recently written into cache data store 26 by CPU 18 is also written through into main memory 14 and thus is sensed by cache controller 40' so that it may modify its associated cache data store. The dirty bit is then reset to 0 in dirty bit register 30. Obviously, if the bus shared signal is equal to 0, there is no need to write through the CPU entry to main memory 14. As shown by the lower branches of the decision tree in FIG. 5, the operations are the same whether the data is initially indicated as being shared or not shared.

If, in response to a CPU write signal, cache miss, not dirty and shared (or not shared) indications are found, the operation is much the same as with the "dirty" instance, however, there is no need to update main memory with the "not dirty" entry as it contains the same data.

Turning now to FIG. 6, the decision tree shown therein illustrates the various system actions in response to a write to memory being sensed on the system bus. If the non-requesting CPU/cache system finds that the data being written to memory from another CPU/cache system or I/O interface is found in its associated cache data store, and it is indicated as being shared, then it merely updates its cache to coincide with the new data being written to memory. In the not shared cases indicated for a cache hit, there is an error state sensed if the same data is found in a cache data store which is being written to memory from another cache data store. In all cases, the cache data store is updated in accordance with the data being written to memory.

What has been discussed to this point has involved, in the main, double word accesses from memory and double word writes to memory. As illustrated in FIG. 1 however, the data format employed by the system shown in FIG. 2 includes two, 4 byte words per line of cache data storage. In many instances, it is not only of interest to read or write both data words, but it is also

This PDF of U.S. Utility Patent 4939641 provided by Patent Fetcher™, a product of Patent Logistics, LLC

beneficial to read or write multiples of double words in a single operation without having to perform individual stores or writes for each double word. This is particularly useful when accessing or writing instruction sets or operating on long character strings.

To handle multi-double word operations, a status register is provided. Thus, as shown in FIG. 2, each of cache controllers 40 and 40' is provided with multi word status registers 90 and 90' respectively. These status registers are employed during multi word transfers.

Referring to FIG. 7, a flow diagram is illustrated which illustrates the occurrences when a multi word data transfer appears on system bus 42 and is monitored by a cache controller other than the one which issued the multi word read request. Each cache controller continuously monitors the system bus for a multi word transfer. During a data return, a cache controller may detect that a data word being transferred has the same tag as a tag stored in its associated bus monitor cache tag store. The cache controller sets in its associated multi word transfer register a one bit in a position which corresponds to the address of the cache tag which evidenced the hit indication. Similarly the cache controller upon detecting the first "hit" in multi-word transfer, sets its bus hold control line which notifies the cache controller receiving the data that it should expect additional data.

The cache controller continues to monitor the system bus until the multi-word transfer has ended. At such time (assuming that cache controller 40' has been monitoring the bus), multi word register 90' has stored therein a series of zeros and ones, with the ones in positions corresponding to addresses of the cache tags where a hit indication occurred.

The cache controller then addresses its tag store at the address indicated by the first hit. If the data stored at that address is indicated as dirty, it is transmitted to the data requestor. If the data is found to be not dirty, the next address is accessed and the process repeated until all addresses corresponding to positions of the multi-word transfer register with one bits, have been examined.

Subsequently, cache controller 40' causes the data which is dirty and corresponds to the ones in multi word transfer register 90', to be transmitted to the interface units associated with the cache controller 40 for storage in cache data store 26.

Turning now to FIG. 8, a flow diagram illustrating an N multi-word data read from memory is illustrated. Initially, a CPU requests a multi word data read from its associated cache, e.g. CPU 10 issues to cache controller 40 via line 80 a multi word data request. However, the initial cache tag requested is found not to be contained in cache data store 26 (a miss). Controller 40 then issues a multi word instruction request to memory control unit 54. Before the actual data transfer occurs the memory position to receive the first double word in cache tag store 26 is addressed. The dirty bit corresponding to the data presently at that address is examined to see if it is set to a one. If it is not, it does not need to be written back to main memory and a corresponding status bit in multi word transfer register remains at 0 indicating that that position may be overwritten. If it is set to one, it must be written back to main memory for update purposes before it may be overwritten.

After either a write back or a finding that a write back is not necessary, the cache tag store is addressed. If there is a hit, a corresponding status bit in multi word transfer register 90 is set equal to one. Subsequently, until N tag store addresses have occurred, the process repeats itself until all N double words have been examined. Then, controller 40 allows a data return from memory control unit 54 which reads out the N words onto data bus 182 where they are captured by data bus interface 58. Multi word transfer register 90 then comes into play and controls which positions in cache data store 26 are updated. (I.e., only positions corresponding to the positions of multi word register 90 which are set to 0). In this manner, not only is the dirty data written back to main memory and main memory completely updated, but also that data received from main memory 14, which is not most current, is inhibited from being stored in the cache data store.

Under certain circumstances, conflicts may occur between cache memories. One such conflict may arise during a data return from main memory to a requestor which is monitored by two or more caches. If those caches register hits for the data unit (or units) being returned from main memory, each will set its respective hold line before it has had a chance to examine the dirty status for data at the monitored address. To prevent a conflict, the procedure shown in FIG. 9 is employed. In sum, each cache controller determines if the others hold line was set on a previous clock cycle. If so the earlier set hold lines dominates. If both hold lines were set during the same clock cycle, then the cache controller associated with the CPU bearing the lower identification number takes precedence.

It is to be understood that the above described embodiments of the invention are illustrative only and that modifications throughout may occur to those skilled in the art. Accordingly, this invention is not to be regarded as limited to the embodiments disclosed herein, but is to be limited as defined by the appended claims.

What is claimed is:

1. A data processing system including one or more central processing units, main memory means, and bus means, for each central processing unit the invention comprising:

cache memory means coupled between the central processing unit and said bus means;

bus monitor means associated with said cache memory means and coupled to said bus means for detecting on said bus means an address associated with a data unit transferred from said main memory means to a bus connection requesting the data unit;

means coupled to said cache memory means and to said bus means for determining if data having the same address as said transferred data unit is present in said cache memory means and, if present, for asserting a hold signal on said bus means, the assertion of the hold signal indicating at least to the bus connection requesting the data unit that another data unit may be transmitted over said bus means; and

means for detecting whether data corresponding to the address of said transferred data unit and determined to be stored in said cache memory means may be different in content from said transferred data unit and, if so, transmitting said data from said cache memory means to said bus means for reception by the bus connection requesting the data unit.

2. The invention as defined in claim 1 wherein said bus connection requesting the data unit, in response to sensing the assertion of said hold signal, maintains an

This PDF of U.S. Utility Patent 4939641 provided by Patent Fetcher™, a product of Patent Logistics, LLC - Page 18 of 21

interaction with said bus means so that the bus connection requesting the data unit may receive said different content data from said cache memory means.

3. The invention as defined in claim 2 and further comprising:

a multi-data unit transfer register; and

means coupled to said bus means and responsive thereto for detecting a multi-data unit read onto said bus means from said main memory means and for determining if any said data unit is present in said cache memory means; said detecting means further including means for recording an indication of such presence in said multi-data unit transfer register and causing said hold line to be asserted.

4. The invention as defined in claim 3 and further including means for transferring from said cache memory means to the recipient of said multi-data unit transfer each said data unit indicated by said multi-data unit transfer register as being present and which is also determined to be dirty.

5. A data processing system including at least first and second central processing units, main memory means, and bus means, the invention comprising:

at least first and second cache memory means respectively coupled between said first and second central processing units and said bus means;

bus monitor means associated with each said cache memory means respectively and coupled to said bus means for detecting on said bus means an address associated with a data unit being read from said main memory means;

means coupled to said associated cache memory means and to said bus means for determining if said corresponding to said address as detected by said bus monitor means is present in the associated cache memory means and, if said data is found to be present, for asserting a first hold signal on said bus means, the assertion of the first hold signal indicating at least to a bus connection reading the data unit that another data unit may be transmitted over said bus means; and

means for detecting whether the data corresponding to said address and stored in said associated cache memory means may be different in content from that detected as being read and, if the data is determined to possibly be different in content, transmitting said data from said associated cache memory means to the bus connection reading the data unit from said main memory.

6. The invention as claimed in claim 5 wherein each said cache memory means comprises a cache data store, a cache tag store, a shared bit store and bus monitor cache tag store.

7. The invention as claimed in claim 6 wherein said bus monitor means captures the physical address of said data from said bus means and provides the cache address and cache tag portions thereof to said determining means.

8. The invention as claimed in claim 7 wherein said determining means compares said cache tag from said bus monitor means with a cache tag stored in its associated bus monitor cache tag store at said cache address provided by said bus monitoring means to determine if said cache tags are identical.

9. The invention as claimed in claim 8, wherein said detecting means includes a dirty bit store.

10. The invention as defined in claim 5 and further comprising for each said cache memory means:

a multi-data unit transfer register; and

means coupled to said bus means and responsive thereto for detecting a multi-data unit read on said bus means from said main memory means and for determining if any said data unit is present in said cache memory means; said detecting means further including means for recording an indication of such presence in said multi-data unit transfer register and causing said hold line to be asserted.

11. The invention as defined in claim 10 and further including means for transferring from said associated cache memory means to the recipient of said multi-data unit transfer each said data unit indicated by said associated multi-data unit transfer register as being present and which is also determined to be dirty.

12. The invention as defined in claim 5 wherein said determining means includes means coupled to said bus means for monitoring said bus means for sensing the presence of the assertion of a second hold signal thereon and for determining priority between the first hold signal and the second hold signal.

13. The invention as defined in claim 12 wherein said detecting means is coupled to said monitoring means and is responsive thereto for transmitting said data from said associated cache memory means in accordance with the priority determination of said monitoring means.

14. In a data processing system comprising at least one central processing unit having a cache memory coupled to a system memory through a system bus, the system bus including signal lines for conveying, during bus cycles, address information and data units associated with addresses between the system memory and other bus connections coupled to the system bus, the cache memory comprising:

means for monitoring bus transactions occurring on the system bus for determining if a bus transaction occurring during a current bus cycle is an operation initiated by another bus connection that reads one or more data units from an address of the system memory;

means for detecting if the address is associated with one or more data units already stored within the cache memory; and

means having an input coupled to said detecting means and responsive thereto and further having an output coupled to the system bus for asserting thereon during the current bus cycle a HOLD signal line, the assertion of the HOLD signal line indicating to the bus connection initiating the read operation that at least one of the data units associated with the address is stored within the cache memory and that the cache memory will, if the data unit is determined to be marked as dirty within the cache memory, transmit the stored data unit to the bus connection during a subsequent bus cycle.

15. A cache memory as set forth in claim 14 and further comprising:

a multi-data unit transfer register; and

means coupled to the system bus and responsive thereto for detecting an occurrence of a multi-data unit read operation and for determining if any data unit read by the multi-data unit read operation is stored in the cache memory, the multi-data unit read operation detecting means further including means for recording in the multi-data unit transfer register an indication that the data unit is stored within the cache memory and further comprising

This PDF of U.S. Utility Patent 4939641 provided by Patent Fetcher™, a product of Patent Logistics, LLC - Page 19 of 21

means, coupled to the asserting means, for causing the HOLD signal line to be asserted.

16. A cache memory as set forth in claim 14 wherein each cache memory is coupled to an associated HOLD signal line for asserting same and wherein said monitoring means includes means for sensing an assertion of another HOLD signal line and further includes means for determining priority between an assertion of the associated HOLD signal line and an assertion of another HOLD signal line.

* * * * *

This PDF of U.S. Utility Patent 4939641 provided by Patent Fetcher™, a product of Patent Logistics, LLC - Page 20 of 21

UNITED STATES PATENT AND TRADEMARK OFFICE

CERTIFICATE OF CORRECTION

PATENT NO. : 4,939,641

DATED : July 3, 1990

INVENTOR(S) : Schwartz et al.

It is certified that error appears in the above-identified patent and that said Letters Patent is hereby corrected as shown below:

Claim 5, Col. 13, line 33, delete "said" (second occurrence) and insert --data--.

Signed and Scaled this

Twenty-fifth Day of June, 1991

Attest:

Attesting Officer

HARRY F. MANBECK JR.

Commissioner of Patents and Trademarks

This PDF of U.S. Utility Patent 4939641 provided by Patent Fetcher™, a product of Patent Logistics, LLC - Page 21 of 21

United States Patent [19]

Whipple

[11] Patent Number: 5,077,733

[45] Date of Patent: * Dec. 31, 1991

[54] **PRIORITY APPARATUS HAVING PROGRAMMABLE NODE DWELL TIME**

[75] Inventor: David L. Whipple, Braintree, Mass.

[73] Assignee: Wang Laboratories, Inc., Lowell, Mass.

[*] Notice: The portion of the term of this patent subsequent to May 15, 2007 has been disclaimed.

[21] Appl. No.: 405,792

[22] Filed: Sep. 11, 1989

Related U.S. Application Data

[63] Continuation-in-part of Ser. No. 317,100, Feb. 28, 1989, Pat. No. 4,926,419, which is a continuation-in-part of Ser. No. 97,775, Sep. 17, 1987, abandoned, which is a continuation-in-part of Ser. No. 712,692, Mar. 15, 1985, Pat. No. 4,719,622.

[51] Int. Cl.[5] H04L 5/22

[52] U.S. Cl. 370/85.6; 370/85.11; 340/825.5

[58] Field of Search 370/85.1, 85.2, 85.4, 370/85.5, 85.6, 85.9, 85.11; 340/825.05, 825.5, 825.51

[56] **References Cited**

U.S. PATENT DOCUMENTS

4,232,294	11/1980	Burke et al.	
4,320,502	3/1982	deVeer .	
4,336,480	12/1982	Van Hanes .	
4,559,595	12/1985	Boudreau et al. .	
4,583,089	4/1986	Cope .	
4,626,843	12/1986	Szeto et al. .	
4,663,756	5/1987	Retterath .	
4,719,622	1/1988	Whipple et al .	
4,763,122	8/1988	Franaszek .	
4,814,974	3/1989	Narayanan et al.	370/85.6
4,926,419	5/1990	Whipple	370/85.11

OTHER PUBLICATIONS

IBM Technical Disclosure Bulletin, vol. 20, No. 2, D. F. Bantz.

Primary Examiner—Douglas W. Olms
Assistant Examiner—Melvin Marcelo
Attorney, Agent, or Firm—Michael H. Shanahan

[57] **ABSTRACT**

Apparatus for determining priority of access to a bus by nodes in a group of nodes attached to the bus. For purposes of determining priority, the apparatus arranges the nodes in a circular configuration and selects one of the nodes as the "anchor node". The anchor node has the highest priority and the priorities of the other nodes are determined by their positions in the circle relative to the anchor node. Each node includes a presettable counter for indicating a number of times that a node may access the bus before the highest priority is rotated to another node. After a device represented by one of the nodes accesses the bus for a predetermined number of speames the current anchor node ceases being the anchor node and the next node in the circle becomes the new anchor node. The priorities of the nodes change to reflect the new location of the anchor node.

19 Claims, 10 Drawing Sheets

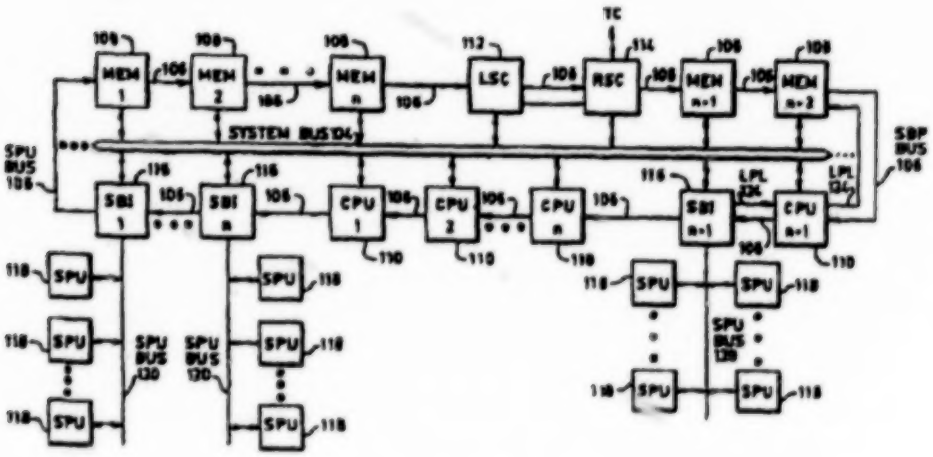

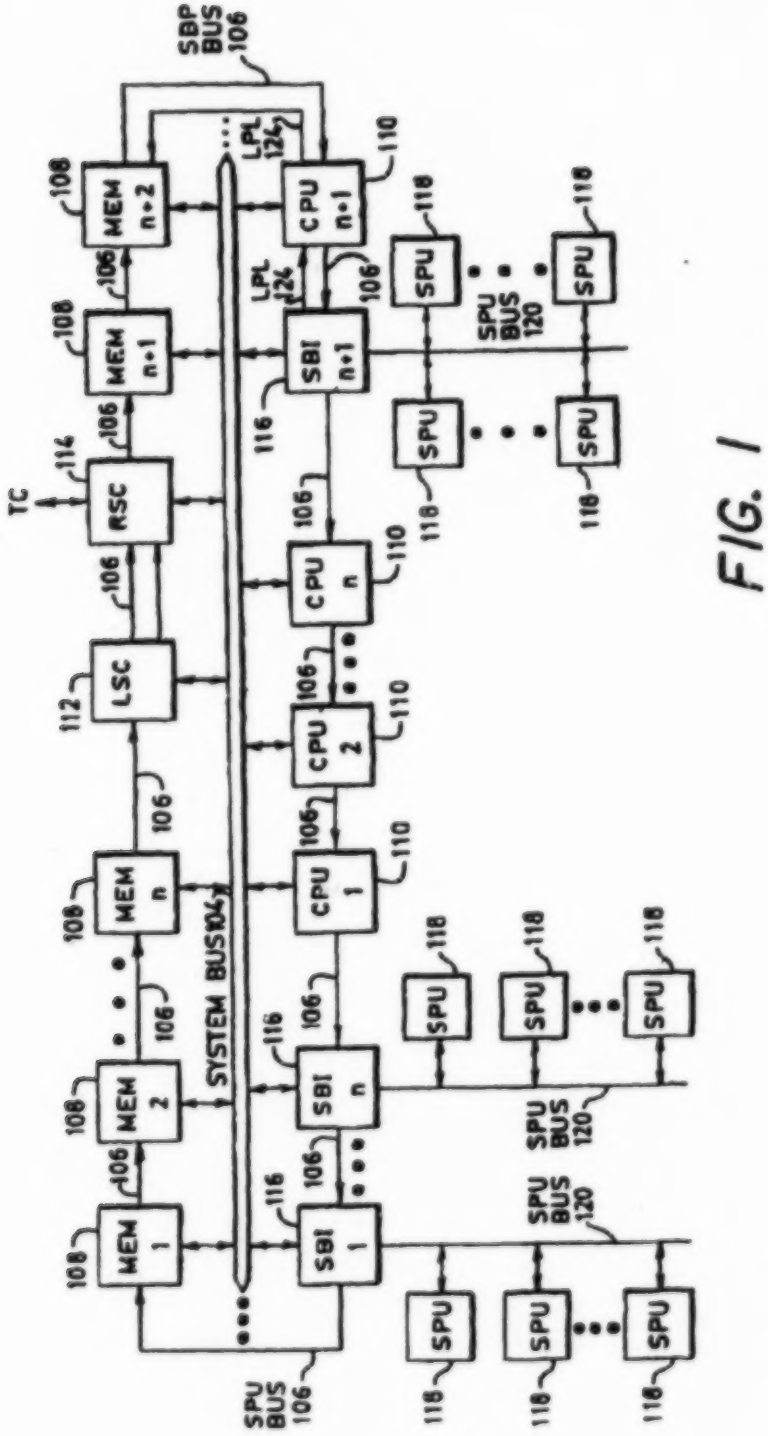

FIG. 1

BEST AVAILABLE COPY

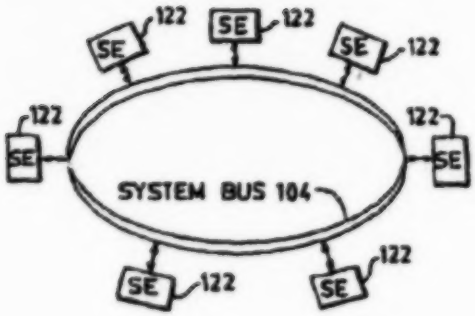

FIG. 1A

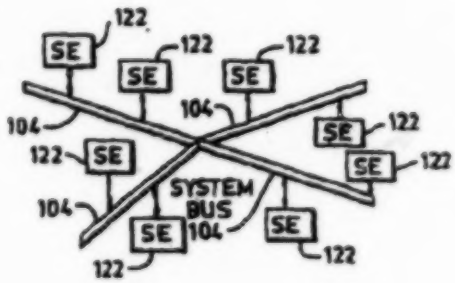

FIG. 1B

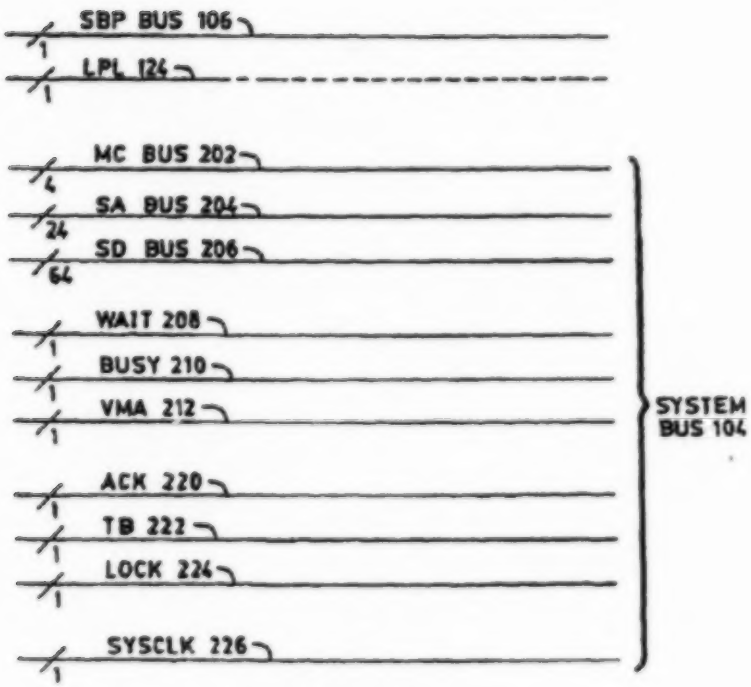

FIG. 2

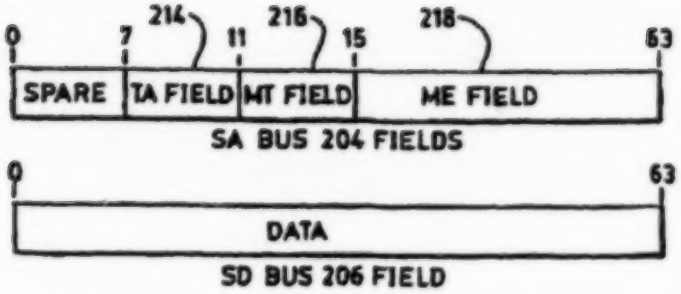
0
7
214
11
216
15
218
63
SPARE
TA FIELD
MT FIELD
ME FIELD
SA BUS 204 FIELDS
0
63
DATA
SD BUS 206 FIELD

FIG. 2A

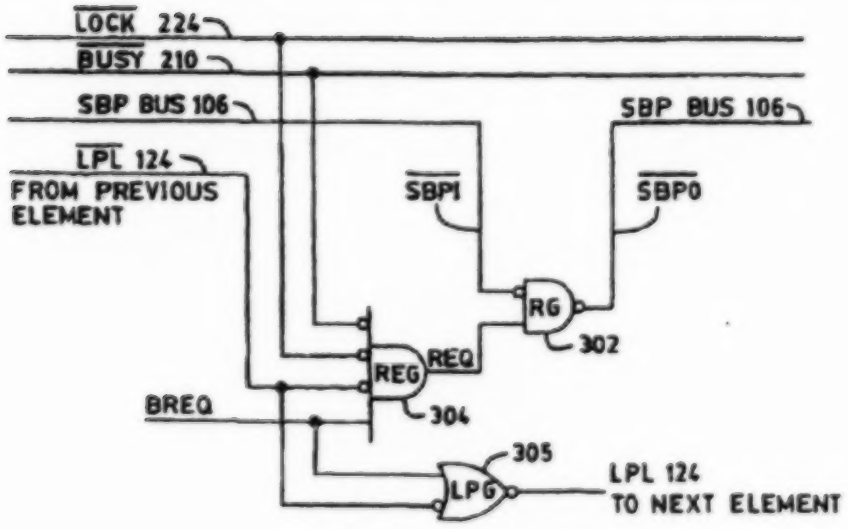
LOCK 224
BUSY 210
SBP BUS 106
SBP BUS 106
LPL 124
FROM PREVIOUS ELEMENT
SBP1
SBP0
RG
302
REG
REQ
304
BREQ
305
LPG
LPL 124
TO NEXT ELEMENT

FIG. 3A

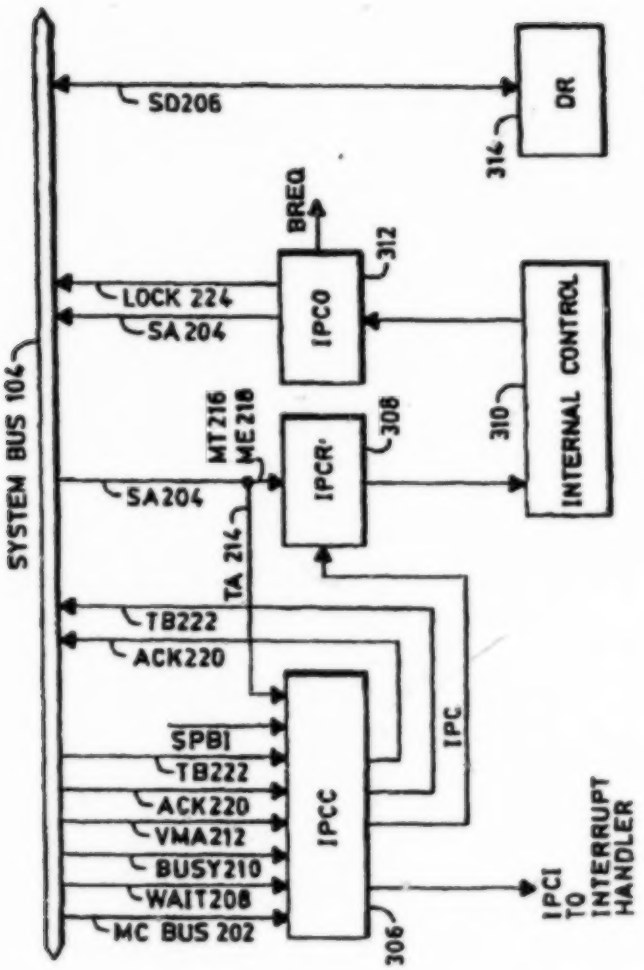
SYSTEM BUS 104
SD206
DR
314
BREQ
312
LOCK 224
SA 204
IPCO
INTERNAL CONTROL
310
MT 216
ME 218
IPCR
308
SA204
TA 214
TB222
ACK220
SPBI
TB222
ACK220
VMA212
BUSY210
WAIT208
MC BUS 202
IPCC
IPC
306
IPCI
TO
INTERRUPT
HANDLER

FIG. 3B

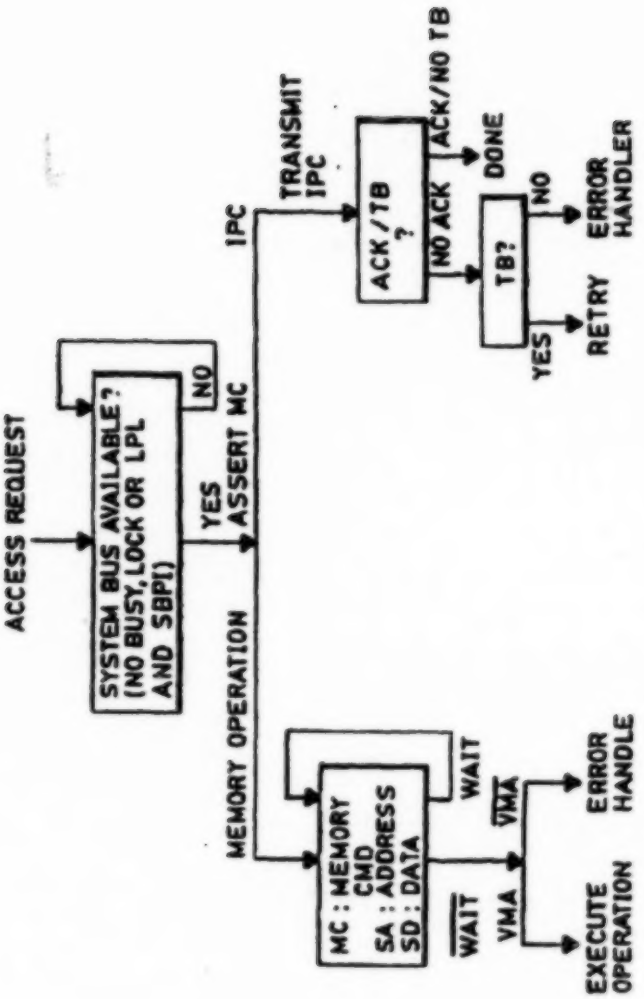
ACCESS REQUEST
SYSTEM BUS AVAILABLE? (NO BUSY, LOCK OR LPL AND SBPI)
NO
YES
ASSERT MC
IPC
TRANSMIT IPC
ACK/TB ?
ACK/NO TB
DONE
NO ACK
TB?
NO
ERROR HANDLER
YES
RETRY
MEMORY OPERATION
MC : MEMORY CMD
SA : ADDRESS
SD : DATA
WAIT
VMA
WAIT
VMA
ERROR HANDLE
EXECUTE OPERATION

FIG. 4A

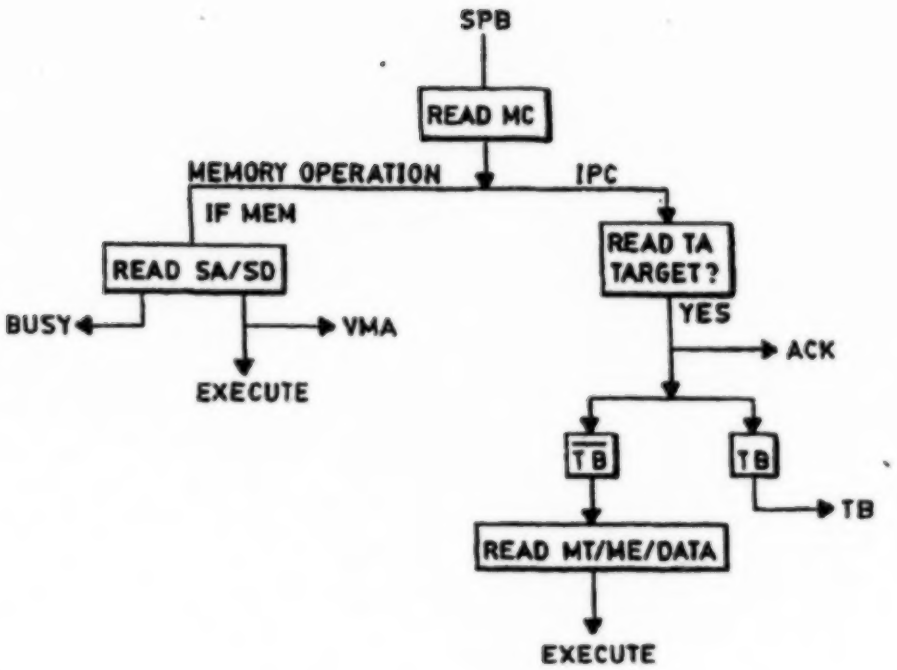
SPB
READ MC
MEMORY OPERATION
IPC
IF MEM
READ SA/SD
READ TA TARGET?
BUSY
VMA
EXECUTE
YES
ACK
TB
TB
TB
READ MT/ME/DATA
EXECUTE

FIG. 4B

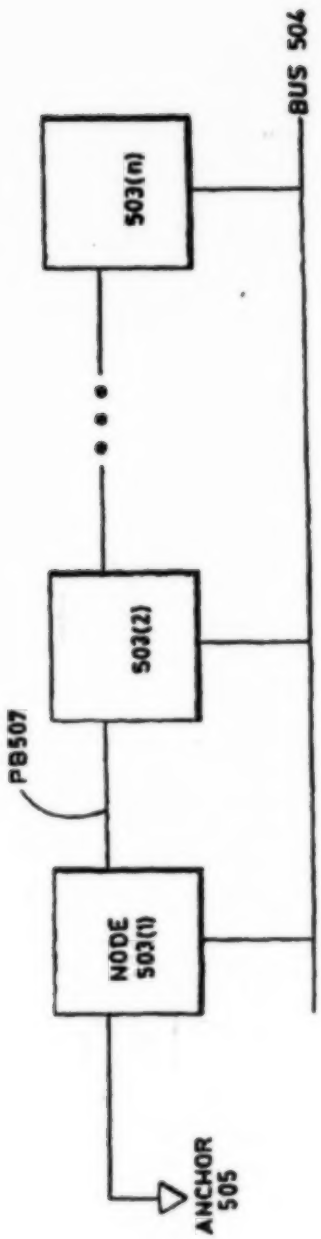

FIG. 5

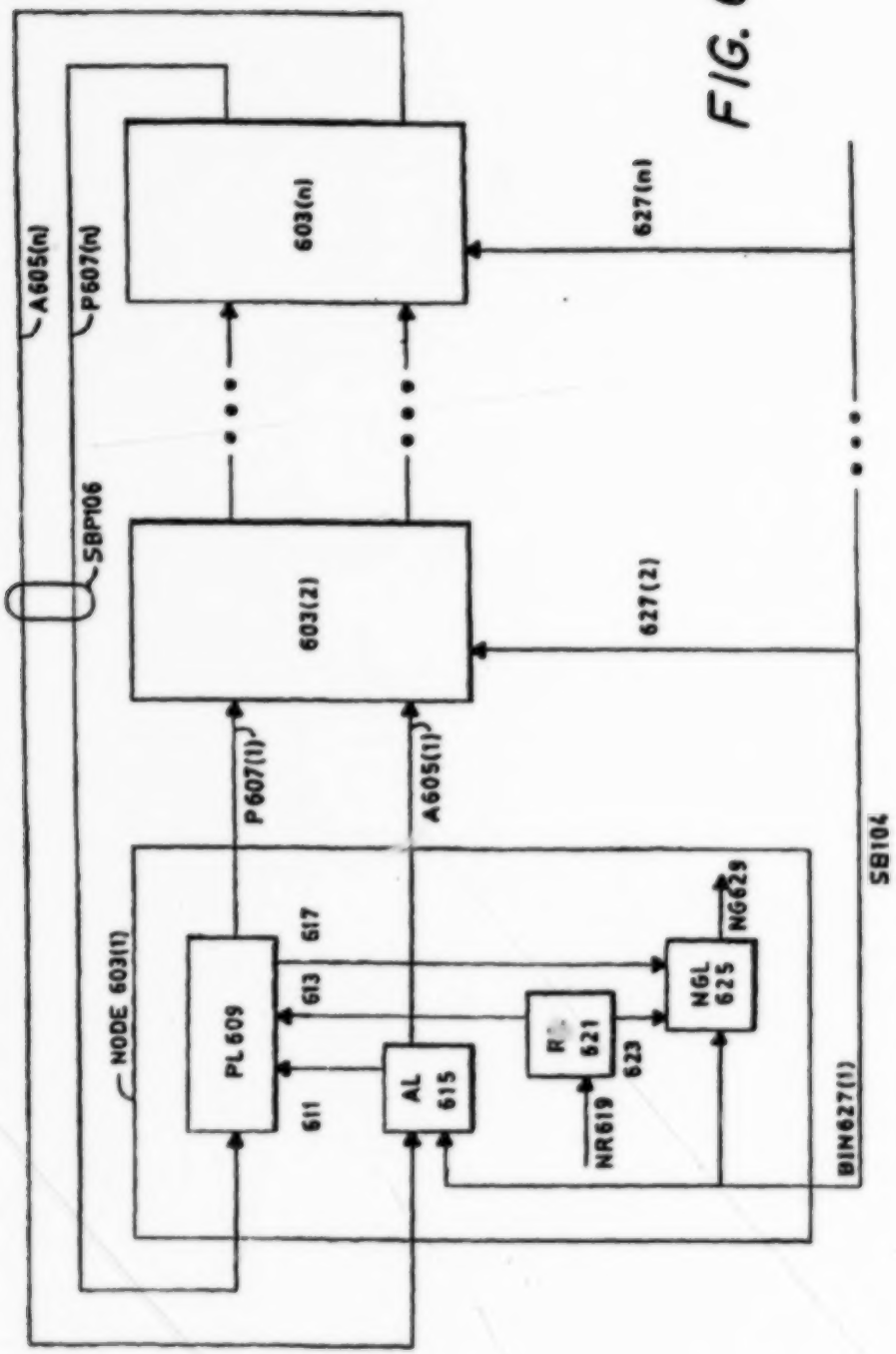
A605(n)
P607(n)
603(n)
627(n)
SBP106
603(2)
627(2)
P607(1)
A605(1)
SB104
NODE 603(1)
PL 609
617
613
611
AL 615
R 621
623
NR619
NGL 625
NG629
BIN627(1)

FIG. 6

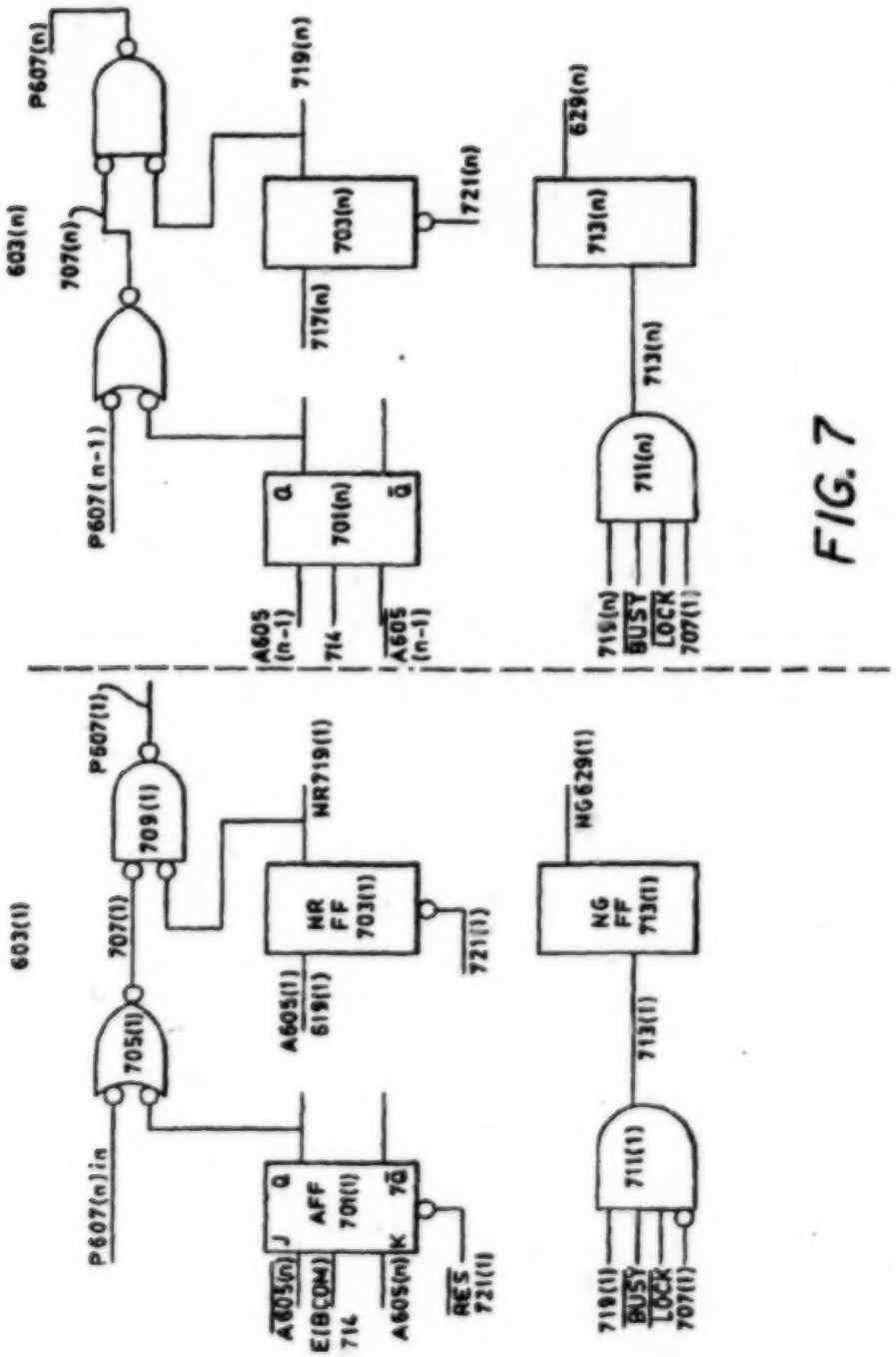
603(n)
P607(n)
707(n)
719(n)
703(n)
721(n)
717(n)
629(n)
713(n)
713(n)
P607(n-1)
701(n)
711(n)
A605 (n-1)
714
A605 (n-1)
715(n)
BUSY
LOCK
707(1)
603(1)
P607(1)
709(1)
NR719(1)
NR FF 703(1)
721(1)
707(1)
705(1)
A605(1) 619(1)
NG629(1)
NG FF 713(1)
713(1)
P607(n)in
AFF 701(1)
711(1)
A605(n)
E(BCON)
714
A605(n)
RES 721(1)
719(1)
BUSY
LOCK
707(1)

FIG. 7

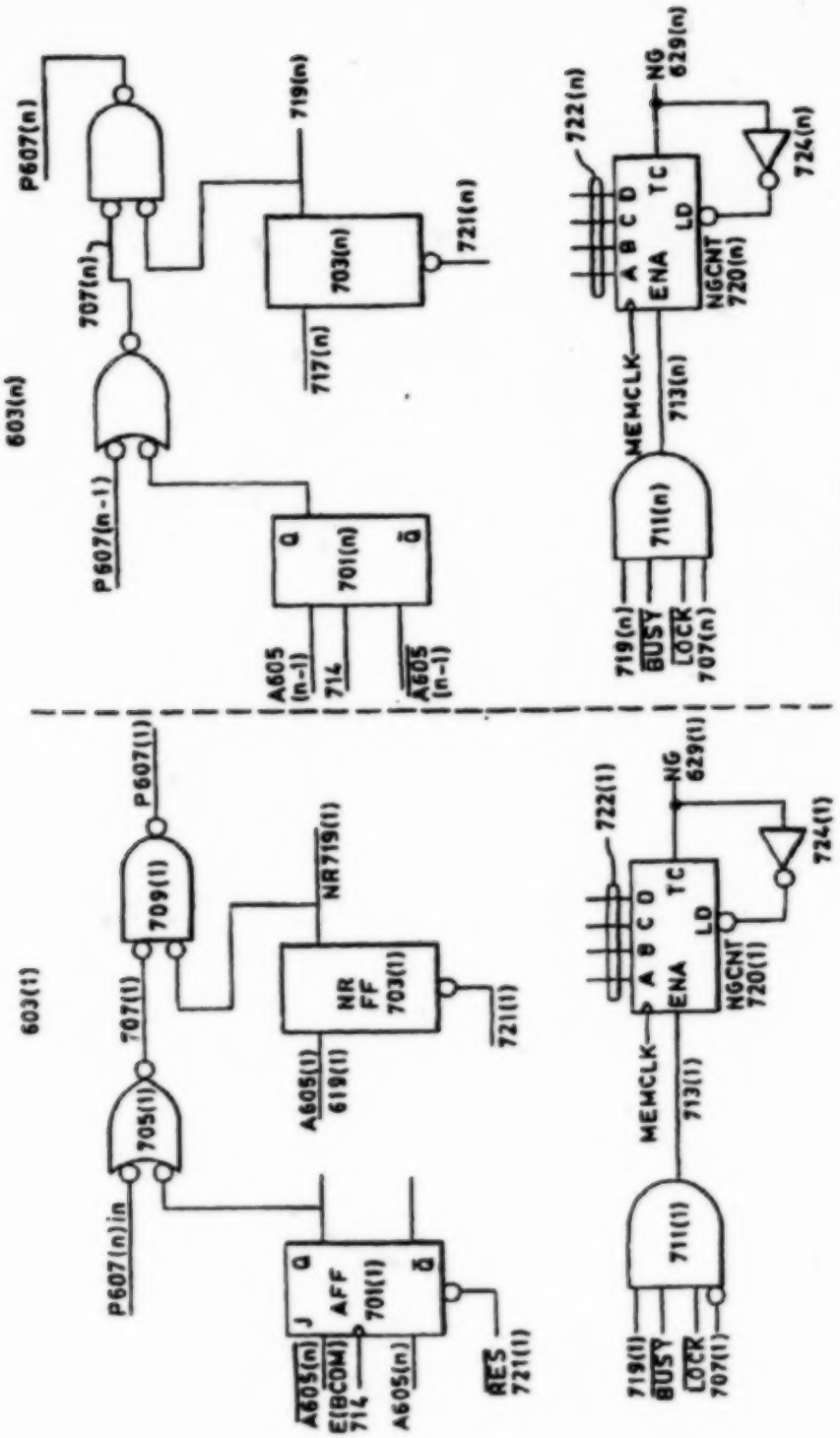
603(n)
P607(n)
707(n)
P607(n-1)
719(n)
703(n)
721(n)
717(n)
701(n)
A605 (n-1)
714
A605 (n-1)
722(n)
NG 629(n)
724(n)
A B C D
ENA
TC
LD
NGCNT 720(n)
MEMCLK
713(n)
711(n)
719(n)
BUSY
LOCK 707(n)
603(1)
P607(1)
709(1)
707(1)
705(1)
NR719(1)
NR FF 703(1)
721(1)
A605(1) 619(1)
P607(n)in
J Q AFF 701(1) Q̄
A605(n) E(BCOM) 714
A605(n)
RES 721(1)
722(1)
NG 629(1)
724(1)
NGCNT 720(1)
713(1)
711(1)
719(1)
BUSY
LOCK 707(1)

FIG. 8

PRIORITY APPARATUS HAVING PROGRAMMABLE NODE DWELL TIME

CROSS REFERENCE TO RELATED APPLICATIONS

The present application is a continuation-in-part of U.S. Ser. No. 07/317,103, Priority Apparatus, filed Feb. 28, 1989 now U.S. Pat. No. 4,926,419 which in turn is a continuation-in-part of U.S. Ser. No. 07/097,773, filed Sept. 17, 1987 (now abandoned) which was a continuation-in-part of U.S. Ser. No. 06/712,492, System Bus Means for Inter-Processor Communication, filed Mar. 15, 1985 and now U.S. Pat. No. 4,719,622, issued Jan. 12, 1988.

BACKGROUND OF THE INVENTION

1. Field of the Invention

The present invention relates to apparatus used in computer systems to determine which of a plurality of devices which share a bus is to have access to the bus at a given instant and more particularly to apparatus in which access is determined by assigning priorities to the device and wherein a device gaining a highest priority to the bus, the anchor node, is granted a programmable number of bus accesses before relinquishing the highest priority to another device.

2. Description of the Prior Art

When a plurality of devices in a computer system share a bus, the computer system must include some way of preventing more than one of the devices from using the bus at once. One technique used in the prior art is to assign each device a static priority; if a device with a high priority and one with a low priority both attempt to access the bus, the device with the higher priority wins. One way of assigning priorities, shown in FIG. 5, is by position. FIG. 5 is a conceptual drawing of a static daisy chain 501. A set of nodes 503, each one of which may provide access to a bus 504 for one or more devices, is arranged in daisy chain fashion, with a priority bus (PB) 507 connecting adjacent members of the chain. The leftmost node 503(1) in the chain has the highest priority, and each succeeding node has a lower priority than the one preceding it. Thus, if node 503(1) and another node 503(*n*) request access simultaneously, node 503(1) receives the access. For purposes of the present discussion, daisy chain 501 may be regarded as having a static "anchor" 505 which marks the point from which all priorities are determined. While static daisy chain 501 successfully determines which of the nodes 503 will have access to the bus at a given time and has the important advantage that the node 503 having priority gains immediate access to bus 504, it does not prevent higher-priority devices from "hogging" bus 504 and denying access to the bus to lower-priority devices. For example, if node 503(1) requests access to the bus on each bus cycle, no other node 503 in chain 501 will ever gain access to the bus 504.

The "hogging" problem may be eliminated if each node is guaranteed a turn at the bus. One way of doing this is disclosed in U.S. Pat. No. 4,342,995, *Data Network Employing a Single Transmission Bus for Overlapping Data Transmission and Acknowledgement Signals*, inventor George T. Shima, issued Aug. 3, 1982. In the system disclosed in that patent, the nodes are daisy-chained together in a loop and a pulse is circulated around the loop. When a node which has a pending bus access request receives the pulse, it gains access to the bus. When the node is finished, it provides the pulse to the next node. If the node which receives the pulse does not wish to access the bus, it holds the pulse for a short time and then passes it to the next node in the chain. While the system of Shima guarantees that none of the nodes will "hog" the bus, it is extremely inefficient in a situation in which one of the nodes uses the bus much more frequently than the other nodes. Once a node in the system of Shima has finished using the bus, it must always wait to begin its next bus access until the pulse has been passed to all of the other nodes on the chain, even though none of the other nodes has a bus access request pending.

What is needed, and what is provided by the invention which is the subject of the present application, is bus priority apparatus which neither permits a single node to "hog" the bus nor requires a node to wait to gain access to the bus when no other node has a request pending. Furthermore, the invention provides that once a node gains the highest bus priority that it maintains the highest priority over the other bus nodes for a programmable number of bus access cycles before relinquishing the highest priority to another node.

SUMMARY OF THE INVENTION

The present invention concerns dynamic circular bus priority apparatus in which each of the nodes connected to the bus has a present priority which is determined by its position in a circular configuration of the nodes relative to one of the nodes which is currently the "anchor node" of the circle. When more than one of the nodes attempts to access the bus simultaneously, the node which gains access is determined by the present priority of the nodes. Furthermore, once a node gains the anchor node priority it retains the highest priority for a programmable number of bus accesses before relinquishing the highest priority to another node. After the programmable number of bus accesses a node other than the current anchor node becomes the anchor node, and the priorities of the nodes are determined by their positions relative to the new anchor node. The invention thus permits the node which presently has priority immediate access to the bus after the expiration of the programmable number of accesses allocated to the node previously having priority and at the same time prevents any node from hogging the bus, and thereby overcomes the problems of the prior art mentioned above.

In a presently-preferred embodiment, each node becomes the present anchor node in sequence. Each time a node gains the anchor position of the bus the node retains the anchor position for a programmable number of bus access cycles made by the node afterwhich the node following the current anchor node becomes the new anchor node. In other embodiments, the next anchor node may be determined by the last node to have gained access to the bus. In such an embodiment, the node following the last node to have gained access becomes the new anchor node, thus guaranteeing that the node which last accessed the bus has the lowest priority for the next access.

It is thus an object of the invention to provide an improved digital computer system.

It is a further object of the invention to provide improved apparatus for determining priority of access to a bus.

It is another object of the invention to provide apparatus for determining priority of access to a bus in

which the node which presently has priority can access the bus immediately but no node can "hog" the bus.

It is an additional object of the invention to provide priority apparatus in which priority is determined by the position of a node relative to a current anchor node whose position in the system changes with each access to the bus.

It is a still further object of the invention to provide priority apparatus in which a node gains a highest bus priority for a predetermined number of bus access cycles before relinquishing the highest priority to another node.

Other objects, advantages and features of the present invention will be understood by those of ordinary skill in the art after referring to the following detailed description of the preferred embodiment and drawings, wherein:

BRIEF DESCRIPTION OF THE DRAWINGS

FIG. 1 is a block diagram of a system incorporating the present invention;

FIGS. 1A and 1B are alternate system bus topologies;

FIG. 2 is a diagram of the bus structure of the present invention;

FIG. 2A is a diagrammic representation of interprocessor communications transmitted through the bus structure of the present invention;

FIGS. 3A and 3B are schematic representations of the system bus interfaces incorporated into the elements of the present system;

FIGS. 4A and 4B are flow charts illustrating the operation of the present invention.

FIG. 5 is a block diagram of a prior-art static daisy chain;

FIG. 6 is a block diagram of the rotating circular chain of the present invention;

FIG. 7 is a logic diagram of an implementation of the present invention in a node; and

FIG. 8 is a logic diagram of a presently preferred embodiment of the invention.

DESCRIPTION OF A PREFERRED EMBODIMENT

Parts A through F of the following Description of a Preferred Embodiment describe the system in which the priority apparatus of the present invention is implemented. The priority apparatus itself is more nearly described in Parts G and H. A presently preferred embodiment of the invention is set forth in Part I. It should be noted that reference numbers appearing in the drawings and in the following descriptions are comprised of three digits. The two least significant (rightmost) digits identify a particular element appearing in a particular drawing and the most significant (leftmost) digit identifies the figure in which that element first appears. For example, element 124 is the 24th element appearing in FIG. 1 and first appears in FIG. 1. A reference numbers is assigned the first time the reference element appears in the descriptions and is used refer to that element throughout the following descriptions and drawings.

A. Elements of System 102 and General Operation (FIG. 1).

Referring to FIG. 1, therein is presented a block diagram of an exemplary System 102 incorporating the inter-processor bus structure of the present invention. As shown therein, the two primary elements of the system bus structure that are visible at this level are System Bus 104 and System Bus Priority (SBP) Bus 106. System Bus 104, the detailed structure of which is described further below, is the means by which the elements of System 102 communicate with one another. SBP Bus 106, also described in detail below, is the link through which the elements connected from System Bus 104 determine access to System Bus 104.

As shown in FIG. 1, the elements comprising System 102 fall into two classes, those which are connected directly to System Bus 104 and SBP Bus 106 and those which are connected indirectly to System Bus 104, that is, through another element which in turn is connected directly to System Bus 104 and SBP Bus 106. As described further below, elements directly connected to System Bus 104 and SBP Bus 106 are fundamentally regarded as a peers with regard to access to System Bus 104, that is, each such element has equal priority of access to System Bus 104 with respect to all other such elements. The access priorities of indirectly connected elements are determined by the access priorities of the associated elements through which they are connected to System Bus 104. Considering first the elements connected directly to System Bus 104, each such element includes sufficient internal intelligence, for example, in the form of microcode control, to perform at least specialized functions independently of the other elements of System 102. Examples of such elements, as illustrated in FIG. 1, includes Memory Units (MEMs) (1 to n+2) 108, Central Processing Units (CPUs) (1 to n+1) 110, Local System Controllers (LSC) 112, Remote System Controllers (RSC) 114, and System Bus Interfaces (SBIs) (1 to n+1) 116.

The design of and functions performed by elements such as MEMs 108 and CPUs 110 are well known in the art and require no further description. LSC 112 and RSC 114 may, for example, be small computers of the personal or professional class adapted to perform certain system control functions, such as providing a user control interface, that is, a "soft control panel". In this respect, RSC 114 may differ from LSC 112 in being connected to a remote user/controller, for example, for diagnostic purposes, through a Telecommunication Link (TC).

SBIs 116 are the elements, described above, through which indirectly connected elements such as Satellite Processing Units (SPUs) 118 are provided with access to System Bus 104. As illustrated in FIG. 1, SPUs 118 are interconnected with each other and to an associated SBI 116 through an SPU Bus 120. The link between the associated SPU Bus 120, and thus the SPUs 118 connected therefrom, and System Bus 104 is in turn provided through the associated SBI 116. It should be noted that SPUs 118 and SPU Buses 120 may use the same structure and operation as described below with reference to System Bus 104 and SBP Bus 106, that is, may be arranged as local system buses identical to the main system bus. SPUs 118 and SPU Buses 120 may alternately be of any other suitable design for the system operation.

SPUs 118 essentially include all devices or system elements which, for example, due to data rates or functions, do not require direct access to System Bus 104 to perform their functions. Examples of SPUs 118 are input/output devices such as disc drives, displays, printers, telecommunications links, tape streamers and user terminals. SPUs 118 may further includes independent or associated processing units, such as other general purpose computers or specialized processing devices,

such as scanners and specialized arithmetic or signal processors.

B. System Bus 104, General Structure and Operation (FIGS. 1, 1A and 1B)

Returning to System Bus 104, as described above System Bus 104 is the means through which the elements of System 102 communicate. In the present embodiment of System 102, and as shown in FIG. 1, System Bus 104 is a linear bus with each of the peer elements of System 102 connected therefrom, the connections to System Bus 104 being unidirectional or bidirectional as required by the function of the element. System Bus 104 may be extended as required by the particular configuration of a System 102, that is, to add or subtract system elements or to connect two or more System 102's into a single system.

It should be noted that, as described below, the logical configuration of System Bus 104 is defined by SBP Bus 106 and may assume any topological structure required by the function of System 102. For example, System Bus 104 may be physically arranged in the loop and star configurations illustrated respectively in FIGS. 1A and 1B. In the loop configuration, the ends of System Bus 104 are tied together to form a closed loop from which System Elements (SEs) 122 are connected. In the star configuration, System Bus 104 is comprised of a number of bus segments radiating from a common junction and SEs 122 are connected from the radiating segments as required by the system configuration.

C. System Bus Priority Bus 106 (FIG. 1)

Referring again to FIG. 1, as described in detail further below SBP Bus 106 is the means through which the System 102 elements connected to System Bus 104 determine access to System Bus 104. As shown in FIG. 1, SBP Bus 106 forms a loop with all of the elements connected from System Bus 104 being serially connected in the SBP Bus 106 loop.

It is assumed, in the exemplary System 102 presented herein, that all processing elements connected from System Bus 104 may have the capability to independently initiate interprocessor communications; thus all elements connected from System Bus 104 are shown as connected in the SBP Bus 106 loop. In certain cases, for example, memory elements, the processing elements may be such that they do not initiate interprocessor communications but will only receive and respond to such communications. Such elements will require access to System Bus 104 to receive such communications and to respond to such communications, for example, by reading data from a memory element to a CPU element, but will not be required to claim access to System Bus 104, that is, access to System Bus 104 will be provided by the element sending the communication being responded to. In such cases, these "response only" elements need not be connected in the SBP Bus 106 loop but will be connected to System Bus 104.

As described below, priority of access to System Bus 104 is passed from one element of System 102 to the next element in the SBP Bus 106 loop in a "rotating daisy chain". That is, if a given element currently has access to System Bus 104, the next element along the SBP Bus 106 loop following the current element has the highest priority for next access to System Bus 104, followed by the next element along SBP Bus 106, and so on around the SBP Bus 106 loop until the current element is reached again. When the element currently having access releases System Bus 104, the opportunity to gain next access is passed through SBP Bus 106 to the next element along SBP BUS 106. That next element may take access to System Bus 104 or, if it does not do so, passes the opportunity for access to its next element along SBP Bus 106, and so on until the element originally having access is reached again or some element along SBP Bus 106 takes access to System Bus 104. The order of priority of access to System Bus 104 thereby rotates around SBP Bus 106 with each element in turn having an opportunity to gain access to System Bus 104. Thus the average priorities of access to System Bus 104 of all elements connected thereto will be equal, with the relative priorities of the elements at particular points in time being determined by their positions along SBP Bus 106 relative to the element currently having either actual access to or the right to access System Bus 104.

Because of the rotating shifting of access priority to System Bus 104 among the elements of System 102 connected from SBP Bus 106, the elements connected to System Bus 104 do not contend for access to System Bus 104. As a result, the access determination logic, described further below, is simplified and, by eliminating System Bus 104 overhead which would otherwise be used in resolving access priorities, the speed of communication between the elements connected to System Bus 104 is increased. In addition, and because each element connected to System Bus 104 and SBP Bus 106 has an equal opportunity to gain access to System Bus 104, no element can be locked out of access to System Bus 104 for an extended period.

Moreover, and again because of the rotating shifting of access priority to System Bus 104 among the elements of System 102, the position of a System 102 element along either SBP Bus 106 or System Bus 104 has no bearing on the average priority of that element to access System Bus 104. That is, and as described above, all elements connected to System Bus 104 and in the SBP Bus 106 loop are peers having, on the average, equal access rights to System Bus 104. As such, an element may be added to System 102, or moved from one point along System Bus 104 and SBP Bus 106 to another, without effecting the average relative priorities of access to System Bus 104 of that element or any of the other elements connected to System Bus 104.

In this regard, SBP Bus 106 is represented in FIG. 1 as comprising a simple, clockwise loop with each element of System 102 being connected in series around the loop. It should be noted, however, that this representation is selected only for clarity of presentation. The elements of System 102 connected from System Bus 104 may, in fact, be connected in series along SBP Bus 106 in any desired order.

The order of elements along SBP Bus 106 may be effected, for example, by the above described temporary priorities of access having effect whenever a certain element has access to System Bus 104. That is, whenever a given element has access to System Bus 104, the next element along SBP Bus 106 has highest priority of next access, and so on around the SBP Bus 106 loop. If, for example, it were known that a particular operation involving access to System Bus 104 by a first element were frequently followed by a related operation again involving access to System Bus 104 by a second element, the second element may be connected in SBP Bus 106 next after the first element. Thus, whenever the first element executed its operation, it would be

known that the second element would have the highest priority of next accessing System Bus 104.

To illustrate with reference to FIG. 1, assume that SBI1 116 is primarily engaged in input/output operations of information being operated upon by CPU1 110, for example, text processing. In such a case, and in order to enhance speed of response to user operations, it may be desirable to allow CPU1 110 next access to System Bus 104 each time SBI1 116 transfers information from a user, that is, a SPU 118, to one of MEM1-n 108. In this case, then, CPU1 110 could be connected in the SBP Bus 106 loop next after SBI1 116.

Finally, a second element of SBP Bus 106 is illustrated in FIG. 1 and referred to as Local Priority Link (LPL) 124. LPL 124 is essentially a means by which the relative priorities of elements interconnected through LPL 124 may be fixed, as opposed to the rotating priorities determined by SBP Bus 106. As will be described in detail in a following description of the SBP Bus 106 element residing in each element connected therefrom, LPL 124 allows the fact of a pending requirement for access to System Bus 104 by one element to be passed to another element connected along a LPL 124 to inhibit any pending accesses to System Bus 104 in the second element.

D. System 102 Bus Structure (FIG. 2)

Referring to FIG. 2, therein is presented a diagrammic representation of System 102's bus structure. As described above and shown in FIG. 1, this structure includes System Bus 104, SBP Bus 106 and, in certain cases, an associated LPL 124.

D.1 Memory Control Bus 202: Memory Operations and Interprocessor Communications

As shown in FIG. 2, System Bus 104 includes a plurality of multiple and single line sub-busses. The first of these sub-busses is Memory Control (MC) Bus 202 which, upon the occurrence of a System 102 element obtaining access of System Bus 104, is used to communicate the type of System Bus 104 operation to be performed.

That is, when an element takes control of System Bus 104 that element signals this access by driving SBP Bus 106 to a state indicative of this fact and places on MC Bus 202 a code indicating the type of System Bus 104 operation to be performed. The elements of System 102 connected to System Bus 104 detect the occurrence of a System Bus 104 access by monitoring the state of SBP Bus 106 and, when an access is indicated, determine the type of System Bus 104 operation to be performed by reading the code placed on MC Bus 202 by the element having access to System Bus 104.

Most System Bus 104 operations are memory related, that is, are reads from or writes to MEM1 108. As such, and as will be seen below with reference to the MC Bus 202 codes, the entire class of non-memory related operations are indicated by a single code indicating that an "interprocessor" communication is to be executed, that is, a communication between two non-memory elements, such as an SBI 116 board and a CPU 110. As described below, the elements connected to System Bus 104 must in such cases refer to other of the System Bus 104 sub-busses to determine and execute interprocessor communications.

The MC Bus 202 codes provided in the present implementation of System 102 include:

CODE	TYPE OF OPERATION
0	No operation;
3	Read the contents of an MM 108 control register;
4	Read a quad word (16 bytes) of information from a specified MM 108 address location;
5	Read an octal word (32 bytes) of information from a specified MM 108 address location;
6	Read a double word (8 bytes) of information from a specified MM 108 address location;
7	Read a word (4 bytes) of information from a specified MM 108 address location;
8	Perform an inter-processor communication;
B	Write to an MM 108 control register;
C	Write a byte into a specified MM 108 address location;
D	Write a half word (2 bytes) into a specified MM 108 address location;
E	Write a double word into a specified MM 108 address location; and,
F	Write a word into a specified MM 108 address location.

It should be noted that the above codes are presented in hexidecimal form and that codes 1, 2, 9 and A are reserved for future use.

Interprocessor communications are thereby executed as a default case from memory related operations. That is, a short "decision branch", reference to a code on MC Bus 202, is provided to identify and initiate memory related operations while a longer "decision branch", reference to further information on other sub-busses of System Bus 104 is required for non-memory related operations. This method thereby effectively increases the speed with which the majority of System Bus 104 operations, that is, memory related operations, may be initiated and executed by providing a shorter decision path for such operations while retaining flexibility in defining and executing all types of System Bus 104 operations.

D.2 System Address (SA) Bus 204 and System Data (SD) Bus 206

The next major sub-busses of System Bus 104 are System Address (SA) Bus 204 and System Data (SD) Bus 206. Considering first memory related operations, SA Bus 204 is the means by which read and write addresses are communicated between elements requesting memory operations and the MEMs 108 executing the operations while SD Bus 206 is the means by which information is communicated between the MEMs 108 and the other elements of System 102.

D.2.a Memory Operations

In a memory operation, as described above the System 102 requesting a memory operation first gains access to System Bus 104 through the operation of SBP Bus 106, described in further detail below, and places an appropriate MC Bus 202 code on MC Bus 202 to indicate the type of operation to be performed. The requesting element then places the read or write address onto SA Bus 204 and, if the operation is a write, places the data to be written onto SD Bus 206. The addressed MEM 108 then writes the data into the corresponding storage location therein. If the operation is a read, the addressed MEM 108 reads the information from the addressed storage location and places the information on SD Bus 206, from which the information is read by the requesting element. In the present implementation

of System 102, for example, SA Bus is 24 bits wide, expandable to 31 bits, while SD Bus 206 is 64 bits, or a double word, wide.

Associated with SA Bus 204 and SD Bus 206 are three further single line sub-busses whose primary functions relate to memory operations. The first of these is WAIT 208. This signal is asserted by an addressed MEM 108 during a memory read operation if the requested information is not available and is monitored by the requesting element, which may accordingly go into a wait mode until the information becomes available.

The second memory operation control is BUSY 210, which is asserted by an addressed MEM 108 during a memory operation and before a System Bus 104 transmission is initiated. BUS 210 indicates that System Bus 104 is not available and is monitored by the elements of System 102.

The third memory operation control is Valid Memory Access (VMA) 212, which is asserted by an addressed MEM 108 to indicate that a requested memory operation is valid, that is, that the address or data are valid. VMA is monitored by the element requesting the memory operation to determine whether the request was successful, that is, valid.

D.2.b Interprocessor Communications (FIG. 2A)

Now considering non-memory related operations, that is, interprocessor communications, SA Bus 204 and SD Bus 206 operate differently in certain respects from that described above when an interprocessor operation is to be performed. As described above interprocessor operations are treated as a default from memory related operations. That is, a single MC Bus 202 code indicates the entire class of non-memory type operations. As also described above, upon the appearance of the interprocessor communication code on MC Bus 202 the elements connected to System Bus 104 must refer to information presented on SA Bus 204 and SD Bus 206 by the requesting element to determine the type of interprocessor operation to be executed.

Referring to FIG. 2A, therein is represented the information which may be presented upon SA Bus 204 and SD Bus 206 in an interprocessor operation. As shown therein, the information appearing on SA Bus 204 includes a 4 bit Target Address (TA) Field 214 identifying the target, or intended recipient of the message, a 4 bit Message Type (MT) Field 216 identifying the type of message to be sent to the target, and a 16 bit Message (ME) Field 218 which may contain a message. In certain interprocessor communication operations, wherein data is to be transmitted from one element to another, SD Bus 206 may contain a data field of up to 8 bytes.

D.2.b.1 TA Field 214 Codes

Considering now the various interprocessor communication fields appearing on SA Bus 204, the TA Field 214 may, for example, contain the following target identification codes:

CODE	TARGET IDENTIFIED
0	Support Control Unit (e.g., LSC 112 or RSC 114);
1	Broadcast to all CPUs 110;
2	CPU1 110;
3	CPU2 110;
4	CPU3 110;
5	CPU4 110;

-continued

CODE	TARGET IDENTIFIED
6	CPU5 110;
7	CPU6 110;
8	CPU7 110;
9	CPU8 110;
A	Reserved for future use;
B	SBI1 116;
C	SBI2 116;
D	SBI3 116;
E	SBI4 116; and
F	Broadcast to all SBIs 116.

It should be noted that the above codes are presented in hexidecimal format.

It is apparent from the above code formats that the exemplary system envisioned in the above code assignments includes a single Support Control Unit 112 or 114, up to 8 CPUs 110 and up to ~4 SBIs 116. The assignment of target codes may be altered at will, depending upon the envisioned configuration of the particular System 102.

It should be noted that SPUs 118 are targeted and messages transmitted thereto through the SPU 118's associated SBIs 116. It should also be noted that the interprocessor communications allow the simultaneous broadcast of messages to all elements of a given type, for example, to all CPUs 110 or to all SBIs 116.

There are no target identification codes for memory elements, that is, for MEMs 108, provided in the exemplary TA Field 214 codes. As described previously, all memory related operations are initiated at the MC Bus 202 code level and the target MEMs 108 identified by addresses concurrently appearing on SA Bus 204.

D.2.b.2 MT Field 216 Codes

The contents of the MT Fields 216 depend upon the particular type of recipient identified in the associated TA Field 214, that is, in the present example, whether the targeted recipient is an SBI 116, that is, an SPU 118 connected from an SBI 116, a CPU 110 or Support Control Unit 112 or 114. As will appear in the exemplary MT Field 216 codes presented below, an MT Field 216 code may identify a message as being the transfer of a message, the transfer of data, or a command for an operation or change of operating state on the part of the recipient element.

Considering first examples of the types of MT codes which may be transmitted to an SBI 116 type of element:

CODE	MESSAGE TYPE
0	Message transfer to target SPU 118;
1	Data transfer to target SPU 118;
8	Reset target SBI 116;
9	Reset target SPU 118;
A	Turn Input/Output (I/O) protection off;
B	Turn I/O protection on;
C	Enable I/O access to specified memory page; and
D	Disable I/O access to specified memory page.

Again, the MT Field 216 codes above are presented in hexidecimal format and codes, 2, 3, 4, 5, 6, 7, E and F are reserved for future use.

Considering now examples of the MT field 216 codes which may be used when the targeted recipient is a CPU 110:

CODE	MESSAGE TYPE
0	Class 1 I/O Interrupt;
1	Class 2 I/O Interrupt;
8	Interprocessor communications; and,
9	Synchronize clock.

Again, the codes are presented in hexidecimal format and codes 2 to 7 and A to F have been reserved for future use.

It should be noted that the above CPU 110 message types provide for two classes of I/O interrupt, Class 1 for when no error has appeared in the I/O operation and Class 2 for when an error has occurred in the I/O operation, for example, in the data. The two classes are provided because of the different handling of these events by the targeted CPU 110.

In the Interprocessor communication type of message, MT Code 8, only SA Bus 204 is used for the communication and the recipient CPU 110 refers to the accompanying ME Field 218 appearing on SA Bus 204 to determine the message, examples of which are presented below. The occurrence of such a communication causes an interrupt pending flag to be set in an interprocessor communication register internal to the recipient CPU 110, described below. The recipient CPU 110 micromachine will then read the interrupt pending flag, execute a macrointerrupt at the next opportunity, and execute a routine to appropriately handle the received message. If the interprocessor communication interrupt flag in the recipient CPU 110 is already active, the recipient CPU 110 will send to the transmitting CPU 110 acknowledgement and busy signals, as described below. It should be noted that in communications from SBIs 116 to CPU's 110, the SBI 116 receiving a busy response will handle the busy response in a manner appropriate to the SBI 116's bus protocol, that is, its protocol with respect to its SPUs 118

Again, the particular message type codes appearing in MT Field 216 and their meanings may be determined at will, depending upon the configuration and function of the System 102 envisioned and the elements appearing therein.

D.2.b.3 ME Field 218 Messages

The 2 byte interprocessor communicating messages appearing in ME Field 218 are, again, dependent upon the function and configuration of System 102 and the elements comprising System 102. Examples of such messages include, in the present implementation, communications between the system elements and the System 102's operating system being executed in the CPUs 110. Such operating system communications may include communications between an I/O device, that is, an SBI 116 or SPU 118, and the operating system and communications between the operating system and a Support Control Unit 112 or 114. For example, the operating system may send a message to a Support Control Unit to read or update an error file or requesting the Support Control Unit to examine some aspect of System 102's operation and report the findings of the examination to the operating system, for example, in diagnostic operations.

Other examples include communications between the CPUs 110 of a multiple-processor configuration of System 102. For example, a particular CPU 110 may wish exclusive access to a given page of memory and may inquire of the other CPUs 110 whether they are using that memory page. The requesting CPU 110 may then, if that page is not being used by another CPU 110, inform all CPUs 110, by a broadcast communication, that it is claiming exclusive access to that memory page. In a further example, a CPU 110 may wish to open and modify a particular file and will inform all other CPUs 110 that it is obtaining exclusive access to that file for that purpose. Yet other examples are messages coordinating the activities of the CPUs 110; for example, a first CPU 110 may assign a task to a second CPU 110 by an interprocessor message and the second CPU 110 may send a communication informing the first CPU 110 when the task is completed.

Still other examples of interprocessor messages occupying the ME Field 218 are I/O messages, essentially commands from the CPUs 110 to the SBIs 116 or SPUs 118 to initiate or control the operations of these elements.

Finally, and referring again to FIG. 2, as described above with reference to memory related operations certain single line sub-busses of System Bus 104 are associated with interprocessor communication operations. Among these are Acknowledge (ACK) 220 and Target Busy (TB) 222. ACK 220 is asserted by the target element of an interprocessor communication when that target exists and acknowledges that the sending element is attempting to send an interprocessor communication to that target element. The sending element monitors ACK 220 to determine whether the attempt to send an interprocessor communication was successful.

TB 222 is asserted by the target element of an interprocessor communication to indicate that the target element is busy and cannot accept the interprocessor communication. The sending element monitors TB 222 and, if the TB 222 is asserted by the target element, will handle the condition depending upon the nature and function of the sending element.

Also associated with both interprocessor communications and memory related operations is LOCK 224. LOCK 224 may be asserted by the initiator of a memory related operation or interprocessor communication to lock out all other users of System Bus 104. LOCK 224 may be asserted, for example, when an element wishes to communicate a series of interprocessor communications or a series of memory operations. LOCK 224 is monitored by all elements connected to System Bus 104 and no user will attempt to obtain access to System Bus 104 while another element is asserting LOCK 224.

Finally, as indicated in FIG. 2, System Bus 104 may include a System Clock (SYSCLK) 226, which is provided to all users of System Bus 104, thereby achieving common timing for all such elements.

Having described the operation of the bus structure of System 102, the bus interface logic residing in each of the elements connected to System Bus 104, and their operation, will be described next below.

E. System Bus Interfaces (FIGS. 3A and 3B)

Referring to FIGS. 3A and 3B, therein are presented diagrammic representations of the interface circuitry provided in each element connected to System Bus 104 to interface these elements to System Bus 104. It should be noted that the logic and circuitry presented herein are illustrative and representative only and may be replaced by any logic or circuitry performing equivalent functions. In addition, where the design and operation

of the logic and circuitry presented herein will be well understood by one of ordinary skill in the art, that logic or circuitry will not be described in detail. The operation of the element interfaces will, however, be described in detail where relevant to the present invention.

E.1. SBP Bus 106 Interface (FIG. 3A)

Referring first to FIG. 3A, therein is presented the interface circuitry primarily concerned with requesting and gaining access to System Bus 104. As previously described, each element connected to System Bus 104 is connected in series along the SBP Bus 106 loop. Other sub-busses of System Bus 104 concerned in obtaining access to System Bus 104 are, as indicated in FIG. 3A, Busy 210 and LOCK 224 and, in certain cases, LPL 124.

As previously described, when an element currently having access to System Bus 104 releases System Bus 104, the opportunity to gain next access to passed through SBP Bus 106 to the next element along SBP Bus 106. That next element may take access to System Bus 104 or, if it does not do so, passes the opportunity for access to its next element along SBP Bus 106, and so on until the element originally having access is reached again or some element along SBP Bus 106 takes access to System Bus 104.

As shown in FIG. 3A, the input of SBP Bus 106 from the previous element along the SBP Bus 106 loop is designated as SBP Input (SBPI) and is connected to a first input of Request Gate (RG) 302. It should be noted that SBPI is shown as an active low signal, as are all other overlined signals. The output of RG 302 is connected to the continuation of the SBP Bus 106 loop to the next element along the SBP Bus 106 loop and is designated as SBP Output (SBPO).

A second input of RG 302 is connected from the Request (REQ) output of Request Enable Gate (REG) 304. REQ will be generated, as described below, when the associated element wishes to request access to System Bus 104 and other conditions, determined by the various inputs to REG 304, also described below, do not prevent the element from requesting access. REQ operates as an enabling signal with respect to RG 302 and SBPI, that is, SBPI will be passed through RG 320 as SBPO and thus the SBPI of the next element along the SBP Bus 106 loop if REQ is not asserted. If, of course, REQ is asserted, SBPI is prevented from passing through RG 302 to become SBPO and the next element along the SBP Bus 106 loop will not receive an SBPI, the present element having claimed access to System Bus 104. RG 302 thereby operates as a gate to prevent the propagation of the opportunity to obtain access to System Bus 104, that is, the element may "capture" the opportunity, and as a signal level restorer for the SBPI/SBPO signal propagated along the SBP Bus 106 loop.

It should be noted that due to the structure of the SBP Bus 106 interface logic, the SBP Bus 106 access signal will propagate around the SBP Bus 106 loop at a speed determined by the propagation time around the physical loop and the delays through the RGs 302 of the elements connected therefrom. As such, delays in gaining System Bus 104 access due to the operation of SBP Bus 106 and the element interfaces thereto are minimized and the overall speed of operation of System 102's bus structure enhanced.

Referring now to REG 304, as shown in FIG. 3A REG 304 receives a Bus Request (BREQ) signal from the element's internal control circuitry, described further below, when the element wishes access to System Bus 104. BREQ is gated, in REG 304 by inputs BUSY and LOCK, previously described, from respectively BUSY 210 and LOCK 224. In certain cases, also previously described, REG 304 is provided with a Local Priority signal from a previous element through an LPL 124. The enabling of REQ, and thus the capture of SBPI/SBPO thereby requires that BUSY, LOCK and a Local Priority signal, if any, not be asserted.

E.2 System Bus 104 Interface (FIG. 3B)

Referring to FIG. 3B, therein is presented a diagrammic representation of the general interface of System Bus 104 of an element connected to System Bus 104. As shown therein, the interface logic includes an Interprocessor Communication Control (IPCC) 306 having inputs connected from the sub-busses of System Bus 104 as indicated. Included among these inputs are the 4 bits of MC Bus 202, WAIT, BUSY, VMA, ACK AND TB, the functions of which have been described above. Also included in IPCC 306's inputs are the TA Field 214 from SA Bus 204.

These inputs essentially define the occurrence, type and state of execution of interprocessor communications and IPCC 306 is essentially comprised of decoding logic for decoding these inputs and providing corresponding outputs to the internal control circuitry of the element, for example, microcode control circuitry.

The design of such internal control circuitry and of such decoding logic as IPCC 306 is well understood by those of ordinary skill in the art, especially after the previous and following descriptions of the operation of System 102's bus structure.

Among the outputs provided by IPCC 306 are an Interprocessor Interrupt (IPCI) to the elements interrupt handler, as previously described, and ACK and TB signals to ACK Bus 220 and TB Bus 222.

IPCC 306 also provides an output indicating the occurrence of an interprocessor communication (IPC) to Interprocessor Communication Register (IPCR) 308 which, as shown in FIG. 3B, is a register connected from the MT Field 216 and ME Field 218 portions of SA Bus 204. IPCR 308 thereby captures and stores the MT and ME fields of an interprocessor communication appearing on SA BUs 204, and provides these fields as inputs to the elements Internal Control Logic (Internal Control) 310.

As is well known in the art, Internal Control 310 may be comprised, for example, of dedicated control logic or a microcode programmed microprocessor controller. Internal Control 310 operates in a first respect to control the operation of the element in response to a received interprocessor communication and, in a second respect, to initiate and control interprocessor communications from the present element.

In this second respect, Internal Controller 310 may generate interprocessor communication control signals to Interprocessor Communication Output Controller (IPCO) 312. IPCO 312 may in turn be comprised of registers and decoding logic to generate MT and ME fields to the SA Bus 204 when the element is initiating an interprocessor communication, and may generate the BREQ signal, described above, when the element wishes to request access to System Bus 104 for an interprocessor communication.

Finally, the interface circuitry may include Data Registers and Drivers (DR) 314 connected with SD Bus

206 to communicate data between the element and SD Bus 206. Such data communication may occur, as previously described, in a memory related operation or when data is transferred in an interprocessor communication.

The interface between an element and System Bus 104 may differ from that described above when that element is a memory element such as an MEM 108. In such a case, the circuitry illustrated in FIG. 3A may be modified accordingly, that is, may contain only those functions necessary for memory related operations.

For example, an MEM 108 IPCC 306 may be provided only with inputs from MC Bus 202, which are sufficient and complete to define all memory related operations. The MEM 108's IPCC 306 may, accordingly, provide outputs WAIT, BUSY and VMA to the appropriate System Bus 104 sub-busses, rather than those shown in FIG. 3A. Similarly, the IPCR 308 of an MEM 108 will be comprised of an address input register connected from SA Bus 204 for receiving memory read and write addresses, and the MM108 will include a bidirectional data connection to SD Bus 206.

Having described the bus and interface structures of System 102's bus structure, and the functions and operation of the signals involved therein, the operation of System 102's bus structure will be described further below with reference to flow charts illustrating these operations.

F. Flow Chart Illustration of Operation (FIGS. 4A and 4B)

Referring to FIGS. 4A and 4B, therein are presented flow chart illustrations of the operations of System 102's bus structure. FIG. 4A is an illustration of a system bus operation from the viewpoint of the bus requestor, while FIG. 4B is an illustration from the viewpoint of the target element.

F.1 Bus Requestor Operation (FIG. 4A)

Referring to FIG. 4A, an interprocessor bus operation, either a memory operation or an interprocessor communication, is begun with the requesting element generating, through its internal control logic, an Access Request. In the first step, the requestor determines whether System Bus 104 is available; that is, and as previously described, the requestor determines whether BUSY, LOCK and LPL 124, if any, are asserted and whether an SBP1 is available.

In the second step, and if the conditions for bus availability are met, the requestor seizes System Bus 104 by capturing the SBP Bus 106 signal and places an appropriate code on MC Bus 202 to indicate the type of operation to be performed. If System Bus 104 is not available, the requestor takes what action is necessary to wait until the bus is available and retries access.

If access to System Bus 104 was gained, and the operation is a memory related operation, the requestor places the memory operation address on SA Bus 204 and the information to be written, if any on SD Bus 206 and monitors WAIT Bus 208.

If the responding memory element is busy, the memory will assert WAIT on WAIT Bus 208 and the requesting element must enter a wait mode until the responding memory element is available.

If the responding memory element is available, and the memory request is valid, the memory element will assert VMA on VMA Bus 212 and the operation will be completed. If the memory request was not valid, VMA will not be asserted and the requestor must refer to its error handler facility to resolve the problem.

If the requested operation was an interprocessor communication, the requesting element will place the appropriate fields, as previously described, on SA Bus 204 and SD Bus 206 and will monitor ACK Bus 220 and TB Bus 222.

If the target element asserts ACK and does not assert TB, the operation will be completed.

If the target element asserts ACK and TB, the requestor must wait and retry the communication as the target element is busy.

If the target element does not assert and does assert TB then the target element is again identified as busy and the requestor must retry the communication. If the target element does not assert ACK or TB, then the requestor must refer to an error handler to resolve the problem.

F.2 Target Element Operation (FIG. 4B)

Referring now to FIG. 4B, therein is presented a general flow chart of the operation of a target element for both memory related operations and interprocessor communication operations.

At the first step, the target element monitors SBP Bus 106 and identifies the initiation of a System Bus 104 operation by the state of SBP Bus 106. At this time, the element reads the code on MC Bus 202 to determine the type of System Bus 104 operation to be executed.

Considering first a memory operation, and assuming that the target element is a memory element, the element then reads SA Bus 204 to determine the target address in System 102's address space and SD Bus 206 to capture the data to be written if the operation is a memory write.

If the target element is busy, it will respond by asserting BUSY on BUSY Bus 210. If the target element is not busy and the memory request is valid, the target element will assert VMA on VMA Bus 212 and will perform the requested operation.

Considering finally an interprocessor communication, the target element determines, by reading the MC Bus 202 code, that an interprocessor communication is to be performed and then reads the TA Field 214 from SA Bus 204 to determine whether that element is the target element.

If that element is the target element, it asserts ACK and, if not busy, does not assert BUSY.

Assuming that the element is not busy and is the target element, the element reads the MT Field 216 from SA Bus 204 to determine the type of communication and the ME Field 218 from SA Bus 204 to capture the message. The element then responds to these fields by executing what operations are required by the message, including reading data from the SD Bus 206 if the communication requires the transfer of data.

ADDITIONAL DESCRIPTION OF SPB BUS 106 AND RELATED PRIORITY LOGIC: FIGS. 6 and 7

As described in the foregoing and shown in FIG. 1, system priority bus (SPB) 106 connects the components of system 102 into a circular daisy chain. As further described in the foregoing, the relative priorities of the components of system 102 are not static, but are instead determined relative to a given component of system 102. During operation of system 102, the component of system 102 from which priority is determined rotates around the circular chain defined by SBP Bus 106. The

following additional description provides details of a presently-preferred embodiment of SPB Bus 106 and of the priority logic. The additional description begins with an overview of the priority system and then describes the manner in which the priority system is implemented in the preferred embodiment.

G. Overview of a Preferred Embodiment of the Priority System: FIG. 6

FIG. 6 presents an overview of a presently-preferred embodiment of the priority system employed in system 102. In FIG. 6, the components of system 102 are represented by nodes 603. Each node 603 contains the priority logic by means of which one or more of the components of system 102 gains access to system bus (SB) 104. The number of nodes 603, and the number of system 102 components represented by a given node 603 depend of course on the configuration of system 102. When a node 603 serves more than one component of system 102, the relative priorities among the components served by the node are determined by additional priority logic, for example a static daisy chain 501 connecting the components served by node 603. In such a situation, the priority determined by the additional priority logic determines which of the devices served by node 603 actually receives access to SB 104 when node 603 gains access to SB 104.

Each node 603 is connected to SB 104 and receives at least BUSY 210, LOCK 234, and signals from MC bus 202. Each node 603 is further connected to SBP 106 to form a circular chain, represented in FIG. 6 as including nodes 603(1) through 603(n). In a preferred embodiment, SBP 106 has two components: priority line (P) 607, from which each node 603 determines whether it may access SB 104, and anchor line (A) 605, which permits the node 603 which has the current highest priority and which consequently currently serves as the "anchor" from which the priorities of the other nodes 603 are determined to rotate sequentially around the circular chain. As may be seen from FIG. 6, each node 603 receives A 605 and P 607 from the node 603 immediately preceding it in the circular chain and provides A 605 and P 607 to the immediately following node 603. In the following discussion, A 605 and P 607 carry subscripts indicating the node which is their source. For example, A 605(n) is provided from node 604(n) to node 603(1).

FIG. 6 shows only the internal structure of node 603(1) in detail; however, all other nodes 603 have similar internal structures and operate in similar fashion. There are four main components of the internal structure of node 603(1): priority logic (PL) 609, anchor logic (AL) 615, request logic (RL) 621, and node grant logic (NGL) 625. Beginning with PL 609, that logic receives as input from P 607(n) indicating whether any preceding node 603 has received the right to access the bus, an input 611 from AL 615 indicating whether node 603(1) is presently the "anchor" and therefore has the highest priority, and an input 613 from RL 621 indicating that one of the components represented by node 603(1) wishes to access the bus. PL 609 further produces output P 607(1), which indicates whether following nodes 603 may have the right to access SB 104 and output 617, which indicates whether node 603(1) is presently entitled to access SB 104.

If input 613 does not indicate a request, PL 609 simply passes the input it received from P 607(n) through to P 607(1). If input 613 does indicate a request and input P 607(n) indicates that node 603(1) may have the right to access SB 104, node 603(1) sets output P 607(1) to indicate that following nodes 603 may not have access and output 617 to indicate that node 603(1) is entitled to access SB 104. If input 613 does indicate a request, input P 607(n) indicates that a preceding node 603 has requested access, and input 611 indicates that node 603(1) is not the anchor, PL 609 again passes the value of P 607(n) through to P 607(1) is the anchor, PL 609 sets P 607(1) to indicate that following nodes 603 may not have access and output 617 to indicate that node 603(1) either when no preceding node 603 has requested access to the bus or when node 603(1) is the anchor, regardless of whether a preceding node 603 has requested access.

Continuing with AL 615, AL 615 includes a state element which indicates whether node 603(1) is presently the anchor. At any given time, that state element will indicate that a node 603 is the anchor in only one of the nodes 603 in the circular chain. AL 615 receives as inputs A 605(n), which indicates the value of the state element in the preceding node 603's AL 615 and signals received from SB 104 via BIN 627(1). AL 615 determines from these signals whether any component of system 102 has gained access to SB 104. AL 615 outputs the present value of the state element to PL 609 as described in the discussion of PL 609 and to A 605(1), which provides it to AL 615 of the following node 603. Each time AL 615 receives signals via BIN 627(1) indicating that a component has gained access to SB 104, AL 615 sets the state element to the value presently on A 605(n). AL 615 in all other nodes 603 works in the same fashion; consequently, each time a component gains access to SB 104, the value of the state element which indicates that a node 603 is the anchor moves to the following node 603. Thus, as components of system 102 use SB 104, the anchor node 603 rotates around the circular chain and each node 603 has the highest priority in turn.

Turning to request logic (RL) 621, RL 621 receives as an input node request (NR) signal 619, indicating that a component represented by node 603(1) is requesting access. As previously indicated, if node 603(1) represents several components, NR 619 may be produced by priority logic (not shown in FIG. 6) which determines which of the components represented by node 603(1) is to gain access to SB 104. RL 621's outputs are 613, which indicates to PL 609 that node 603(1) is making a request to access the bus, and 623, which indicates the same fact to NGL 625. NGL 625 determines whether the component which is requesting access will receive it. Inputs to NGL 625 in a preferred embodiment are BUSY 210 and LOCK 234 from SB 104, output 623 from RL 621 indicating that one of the components represented by node 603(1) is requesting access, and output 617 from PL 609, indicating that node 603(1) is requesting access and output 617 from PL 609, indicating that the node 603(1) is entitled to access. When BUSY 210 and LOCK 234 indicate that SB 104 is available, output 623 indicates that a request has been made, and output 617 indicates that node 603(1) is entitled to access SB 104, NGL 625 output node grant signal (NG) 629 to which the component represented by node 603(1) which has the right to access SB 104 responds by seizing the bus.

The effect of the operations just described is that when a component represented by node 603(1) requests access to SB 104, node 603(1) obtains access either if node 603(1) is the current anchor node or if neither the

current anchor node 603 nor any of the nodes 603 following the current anchor node 603 and preceding node 603(I) is requesting access. Further, each time any component of system 102 obtains access to SB 104, the node 603 following the current anchor node 603 becomes the new anchor node. The former anchor node 603 then has the lowest access priority; however, if the new anchor node 603 and none of the nodes 603 following the new anchor node and preceding the former anchor node requests the bus, former anchor node 603 may access it. Rotating circular chain 601 thus neither permits a single component of system 102 to "hog" SB 104 nor prevents any component from receiving immediate access to SB 104 when the priority of the component's node 603 permits it.

H. Detailed Description of Node Priority Logic: FIG. 7

FIG. 7 is a logic diagram showing an implementation of PL 609, AL 615, RL 621, and NGL 625 in nodes 603(1) and 603(n). The relationship between FIG. 6 and FIG. 7 is the following: PL 609 is implemented in the nodes of FIG. 7 by means of NOR gate 705 and NAND gate 709; AL 615 is implemented by means of anchor flip-flop (AFF) 701; RL 621 is implemented by means of node request flip-flop (NRFF) 703; and NGL 625 is implemented by means of AND gate 711 and NGFF 713. The discussion will first explain the logic of node 603(1) and then explain the differences between that node and the other nodes 603, exemplified by node 603(n).

Beginning with PL 609, in a preferred embodiment, P 607(n) is high when a preceding node 603 has requested access to the bus and low when no preceding node 603 has requested access. A 605(I), from AFF 701(1), which corresponds to input 611, is low when node 603(1) is the anchor node and otherwise high. NR 719(1), finally, which corresponds to input 613, finally, is high when a component represented by node 603(1) has requested access and otherwise low.

If node 603 is not requesting access, NR 719(1) is low and the value of P 607(1) is determined by the value of input 707(I), which in turn is determined by the value of P 607(n). Thus, when there is no request in node 603(1), the value output on P 607(1) is the same as that received on P 607(n).

If node 603(1) is requesting access, driving NR 719(1) high, and P 607(n) is low, indication that no preceding node has taken access, output 707(1) is low regardless of the value of A 605(1). When 707(1) is low and NR 719 is high, P 607(1) is high, indicating to nodes following node 603(1) that a preceding node has taken access. When P 607(n) is high, P 607(1) is also high, but the value of output 707(1) depends on the value of A 605(1). If it is high, indicating that node 603(1) is not the anchor node, 707(1) is high; if A 605(1) is low, output 707(1) is low. As will be described in more detail with regard to NGL 625, when 707(1) is low and other conditions are met, the component requesting the bus seizes the bus. Thus, the component can seize the bus in either of two cases: if no preceding node 603 has taken access of if a preceding node 603 has, but node 603(1) is currently the anchor node.

As should be apparent from the above discussion, which node 603 in rotating circular chain 601 is to obtain access to SB 604 cannot be determined until each node 603 beginning with the current anchor node has had a chance to respond to P 607. Thus, there must be a period for resolving access which is long enough to permit such response. The length of the period will depend on the gate delays in each node 603 and the number of nodes 603 in the circular chain. It is an advantage of the present implementation that gates 705(1) and 709(1) may be implemented by means of a single AND/OR invert gate. Consequently, only a single gate delay is necessary in each node 603. In system 102, the period for resolving access is 60 ns, and 6 ns are required for set up and gate delay in each node 603; thus system 103 may have up to 10 nodes 603.

Continuing with the implementation of AL 615, AFF 701(I) is a JK flip flop. The J input receives NOT A 605(n), while the K input receives A 605(n). In the AFFs 701 of nodes 603(2) through (n), the J input receives A 605 from the preceding node 603 and the K input receives that node's NOT A 605. When the AFFs 701 receive a rising edge on their clock inputs, the value on the J and K inputs are stored in the flip flops. In the preferred embodiment, the clock signal is F(BCOM) 714. This is a signal which is derived from signals on MC Bus 202 and bus clock signals on SB 104 and which indicates that a component of system 102 has seized the bus. The input of NOT A 605(n) to the J input of AFF 701(1) and of A 605(n) to the K input of that flip flop guarantees that exactly one AFF 701 will have a low Q output, indication that its node 603 is the anchor node, in circular chain 601, and the use of F(BCOM) 714 to set all of the AFFs 701 ensures that the anchor moves to he next node 603 each time a component of system 102 seizes SB 104. At initialization of system 102, an arbitrary one of the nodes 603 in the system is selected to be the first anchor node, and AFF 701 in that node is reset so that A 605 from that node is low. In FIG. 7, node 603(1) is the selected node, and NOT RES 721(1) permits resetting of AFF 701(1).

The implementations of RL 621 and NGL 625 are straightforward. RL 621 consists of NRFF 703, which receives and retains NR signal 619(I) indication that a component represented by node 603(I) has made a request. NOT RES 721(1) permits resetting NRFF 703(1) when the request has been services. NGL logic 625 consists of AND gate 711(1) and NGFF 713(1). AND gate 711(1) requires that NRFF 703(1) indicate a request, that neither BUSY nor LOCK is being asserted in system bus 104, and that output 707(1) indicates that node 603(1) may access the bus, either because no preceding node wants to access it or because node 603(1) is the current anchor node. If all of these conditions hold, NGFF flip flop 713(1) is set, NG 629(1) is high, and in response to that signal, the component which made the request seizes SB 104.

The foregoing discussions has disclosed how one skilled in the art may construct a dynamic circular priority chain in which the priority of a node with regard to access to a bus in a computer system is determined by its position on the circle relative to a current anchor node and in which the current anchor node changes each time a component attached to the bus accesses the bus. In such a dynamic circular priority chain, no node can "hog" the bus, and at the same time, any node can have immediate access to the bus if there is no node with higher priority requesting access. Moreover, the time to determine which node will receive access is no more than that required for a priority signal to propagate through priority logic implemented by means of single gate in each node.

I. Detailed Description of a Presently Preferred Embodiment of Node Priority Logic: FIG. 8

FIG. 8 is a logic diagram showing an implementation of PL 609, AL 615, RL 621, and NGL 625 in nodes 603(1) and 603(n). The relationship between FIG. 6 and FIG. 8 is the following: PL 609 is implemented in the nodes of FIG. 8 by means of NOR gate 705 and NAND gate 709; AL 615 is implemented by means of anchor flip-flop (AFF) 701; RL 621 is implemented by means of node request flip-flop (NRFF) 703; and NGL 625 is implemented by means of AND gate 711 and, in accordance with the invention, a programmable node grant counter NGCNT 720. The previous discussion as to the operation of the node logic shown in FIG. 7 applies in general also to the embodiment shown in FIG. 8 and will not be repeated. Instead only that portion of the logic that differs is discussed in detail.

The implementations of RL 621 and NGL 625 are straightforward. RL 621 consists of NRFF 703, which receives and retains NR signal 619(1) indicating that a component represented by node 603(1) has made a request. NOT RES 721(1) permits resetting NRFF 703(1) when the request has been serviced. NGL logic 625 includes AND gate 711(1), NGCNT 720(1) and inverter 724(1). AND gate 711(1) requires that NRFF 703(1) indicates a request, that neither BUSY nor LOCK is being asserted in system bus 104, and that output 707(1) indicates that node 603(1) may access the bus, either because no preceding node wants to access it or because node 603(1) is the current anchor node. If all of these conditions are met an enable count (ENA) input of NGCNT 720(1) is asserted and during a bus access cycle a transition of a clock signal (MEMCLK) causes NGCNT 720(1) to increment by one count.

Further in accordance with this aspect of the invention NGCNT 720(1) increments for each access to the bus, NGCNT 720(1) incrementing from some initially programmed value until a count of 15 (F_{16}) is reached. At this time a terminal count (TC) output of NGCNT 720(1) goes high, generating the signal NG 629(1). NG 629(1) being asserted causes an anchor out signal to be generated and applied to a next node in the priority chain. NG 629(1) is also inverted and fed back by inverter 724(1) and is applied to an active low load (LD) input of NGCNT 720(1). The low signal applied to the LD input causes NGCNT 720(1) to load the digital value appearing on lines 722(1) and to thereby preset NGCNT 720(1) to a predetermined value. Presetting NGCNT 720(1) to the predetermined value, other than 15, also causes the TC output to go low, removing the NG629(1) signal. Lines 722(1) may be sourced from manually set switches, hardwired jumpers or may be sourced from a latch or register (not shown) whereby the value may be programmed and changed, if desired, under a user's or an operating system's control. As can be appreciated, the value that is preset into the counter NGCNT 720(1) determines how many bus accesses the present highest priority anchor node is allowed before the highest priority is passed to a next requesting node in the chain of nodes. By example, if NGCNT 720(1) is preset to a value of seven then the node is granted eight consecutive bus accesses (15—7) before the highest priority is passed to the next requesting node. Of course, NGCNT 720(1) may be embodied in other than a four bit counter. For example, if NGCNT 720(1) were embodied in an eight bit counter up to 255 memory accesses could be made by the node before priority was rotated to another node. It should also be realized that the output of the counter could be compared to a digital value by a comparator circuit for determining when the programmed number of bus accesses have expired. That is, a number of possible hardware embodiments can be envisaged for realizing the desired result.

The foregoing discussion has disclosed how one skilled in the art may construct a dynamic circular priority chain in which the priority of a node with regard to access to a bus in a computer system is determined by its position on the circle relative to a current anchor node and in which the current anchor node changes after a predetermined number of accesses to the bus. In such a dynamic circular priority chain, no node can "hog" the bus, and at the same time, any node can have immediate access to the bus if there is no node with higher priority requesting access. Moreover, the time to determine which node will receive access is no more than that required for a priority signal to propagate through priority logic implemented by means of single gate in each node.

While the foregoing description has disclosed the best mode presently known to the inventor for implementing the invention, other implementations are possible, including ones in which no separate [illegible] is required for the anchor logic and ones in which an access to SB 104 by a node results in the next node following that node becoming the anchor node. Thus, the present embodiments are to be considered in all respects as illustrations and not restrictive, the scope of the invention being indicated by the appended claims rather that the foregoing description, and all changes which come within the meaning and range of equivalency of the claims are intended to be embraced therein.

What is claimed is:

1. Apparatus for determining priority of access to a bus among a set of devices coupled to the bus, each device being represented for priority purposes by a node in a group of nodes, each node being coupled to the bus and receiving a priority line from a first adjacent node and providing a priority line to a second adjacent node and having a priority relative to a single node with the highest priority, the priority determining apparatus comprising in each node:

priority logic means for permitting access to the represented device if no higher priority node has requested access; and

highest priority node specification means responsive to the bus for specifying whether the node is presently the highest priority node and, if the node is presently the highest priority node, dynamically giving the highest priority to another of the nodes in response to a predetermined number of accesses of the bus by one of the set of devices.

2. The apparatus set forth in claim 1 and wherein:

the node has the lowest priority after the highest priority node specification means gives the highest priority to another of the nodes.

3. The apparatus set forth in claim 1 and wherein:

the highest priority node specification means gives the highest priority to a node having the next highest priority.

4. Apparatus for determining priority of access to a bus among a set of devices coupled to the bus, each device being represented for priority purposes by a node in a group of nodes, each node being coupled to the bus and receiving a priority line from a first adjacent node and providing a priority line to a second adjacent

node and having a priority relative to a single node with the highest priority, the priority determining apparatus comprising in each node;

priority logic means for permitting access to the represented device if no higher priority node has requested access; and

highest priority node specification means responsive to the bus for specifying whether the node is presently the highest priority node and, if the node is presently the highest priority node, dynamically giving the highest priority to another of the nodes in response to a predetermined number of accesses of the bus by one of the set of devices, wherein

the highest priority node specification means includes counter means for counting a number of accesses to the bus and, responsive to a programmed value, gives the highest priority to another node on a next access by a node to the bus.

5. The apparatus set forth in claim 1 and wherein:

the group of nodes is configured as a circle for purposes of determining priority; and

the priority of a node is determined from the node's position in the circle relative to the highest priority node.

6. The apparatus as set forth in claim 5 and wherein:

the priority of the node is determined by the number of nodes between the node and the highest priority node in a preselected direction around the circle, with priority decreasing as the number of nodes increases.

7. The apparatus set forth in claim 6 and wherein:

the highest priority node specification means gives the highest priority to the adjacent node in the direction of decreasing priority.

8. The apparatus set forth in claim 5 and wherein:

the highest priority node specification means gives the highest priority to an adjacent node in the circle.

9. The apparatus set forth in claim 1 and wherein:

the group of nodes is configured as a circle for purposes of determining priority;

the priority logic means in each node includes preceding request value receiving means for receiving from the priority logic means of the immediately preceding node in a predetermined direction around the circle a request value which is in the alternative a first request value indicating that a preceding node beginning at the highest priority node has requested access to the bus and a second request value indicating that no preceding node has requested access,

preceding request value providing means for providing in the alternative the first or second request value to the priority logic means of the immediately succeeding node, and

priority value receiving means for receiving from the highest priority node specification means a priority value which is in the alternative a first priority value indicating that the node has the highest priority and a second priority value indicating that the node does not have the highest priority; and

the priority logic means operates responsively to the received request value, the received priority value, and any bus access request to respond to the absence of a bus access request and to any received request value by providing a request value equal to the received request value; respond to the presence of a bus access request and a received second request value by providing the first request value and permitting access to the bus,

respond to the presence of a bus access request and a received first request value and the second priority value by providing the first request value without permitting access to the bus, and

respond to the presence of a bus access request, a received first request value and the first priority value by providing the first request value and permitting access to the bus.

10. The apparatus set forth in claim 9 and wherein:

the highest priority node specification means includes preceding priority value receiving means for receiving the priority value specified by the immediately preceding node's highest priority node specification means,

preceding priority value providing means for providing the priority value specified by the node's highest priority node specification means to the immediately following node, and

bus access signal receiving means connected to the bus for determining when an access of the bus by one of the nodes has occurred; and

the highest priority node specification means sets the priority value to the priority value received on the preceding priority value receiving means when the bus access signal receiving means determines that an access of the bus has occurred.

11. Apparatus for determining priority of access to a bus among a set of devices coupled to the bus comprising:

a group of nodes, each node representing a device and having a priority and being responsive to requests to access the bus from the represented device to provide access if no device represented by a node with higher priority has requested access;

means for giving a single one of the nodes the highest priority;

means for giving the highest priority to a different node in response to a predetermined number of accesses of the bus by a device; and

means for determining the priority of each node relative to the highest priority node.

12. The apparatus set forth in claim 11 and wherein:

the means for determining the priority of each node relative to the node currently having the highest priority is a circular configuration of the nodes wherein the priority of a given node is determined by the node's position relative to the highest priority node.

13. The apparatus set forth in claim 12 and wherein:

the means for giving the highest priority to a different node gives the highest priority to an adjacent node in the circle.

14. The apparatus set forth in claim 13 and wherein:

the priority of a given node in the circular configuration is determined by the number of nodes between the node and the highest priority node in a preselected direction around the circle, with priority decreasing as the number of nodes increases; and

the means for giving the highest priority to a different node gives the highest priority to the adjacent node in the direction of decreasing priority.

15. A method for determining priority of access to a bus among a set of devices coupled to the bus, each device being represented for priority purposes by a node in a group of nodes and each node having a prior-

ity relative to a single node currently having the highest priority, the method comprising the steps of:

receiving an access request in a node from a represented device;

determining whether any node with a higher priority has received an access request;

if no such node has received an access request, permitting the device to access the bus;

counting a number of accesses by the device to the bus; and

in response to predetermined number of accesses to the bus, giving another node the highest priority.

16. A method as set forth in claim 15 and including an initial step of providing a value indicating a predetermined number of accesses that the device may make to the bus.

17. A method as set forth in claim 16 wherein the step of providing is accomplished by loading a digital value into a presettable counter means.

18. A method as set forth in claim 17 wherein the step of counting includes a step of incrementing the presettable counter means for each access by the device to the bus.

19. A method as set forth in claim 18 wherein the step of giving another node the highest priority occurs when the presettable counter means generates a terminal count output.

* * * * *

US005379379A

United States Patent [19]

Becker et al.

[11] Patent Number: 5,379,379

[45] Date of Patent: Jan. 3, 1995

[54] **MEMORY CONTROL UNIT WITH SELECTIVE EXECUTION OF QUEUED READ AND WRITE REQUESTS**

[75] Inventors: **Robert D. Becker, Shirley; Martin J. Schwartz, Worcester; Kevin H. Cureton, Pepperell; Kenneth J. Eng, West Bridgewater, all of Mass.**

[73] Assignee: **Wang Laboratories, Inc., Lowell, Mass.**

[21] Appl. No.: **580,365**

[22] Filed: **Sep. 6, 1990**

Related U.S. Application Data

[63] Continuation of Ser. No. 213,395, Jun. 30, 1988, abandoned.

[51] Int. Cl.[5] **G06F 13/16**

[52] U.S. Cl. **395/250**; 395/425; 395/725; 364/239.5; 364/242.91; 364/246.6; 364/DIG. 1; 364/937.01; 364/939.1; 364/969; 364/DIG. 2

[58] Field of Search ..... 364/DIG. 1, DIG. 2; 395/250, 425, 650, 725

[56] **References Cited**

U.S. PATENT DOCUMENTS

4,225,922	9/1980	Porter	364/200
4,354,232	10/1982	Ryan	364/200
4,516,199	5/1985	Frieder et al.	364/200
4,688,188	8/1987	Washington	364/900
4,783,736	11/1988	Ziegler et al.	395/425
4,792,926	12/1988	Roberts	365/189
4,833,651	5/1989	Seltzer et al.	365/189.07
4,864,543	9/1989	Ward et al.	365/221
4,933,901	6/1990	Tai et al.	365/189.07
5,034,922	7/1991	Burgess	365/189.07
5,097,442	3/1992	Ward et al.	365/78

Primary Examiner—Thomas G. Black
Assistant Examiner—Maria N. Von Buhr
Attorney, Agent, or Firm—Kenneth L. Milik

[57] **ABSTRACT**

A memory control unit (MCU) 22 includes a first interface for interfacing the memory control unit to one or more memory units; a second interface for interfacing the memory control unit to a system bus, including a system data bus for expressing information units, including memory read and write requests, and a system address bus. The MCU further includes logic, responsive to a write request from the system bus, for storing one or more information units within a memory unit at an address specified by the system address bus. The storing logic includes write request receiving and buffer logic having a plurality of storage locations for storing received write requests and associated write addresses prior to the execution of the write requests. The MCU further includes logic, responsive to a read request from the system bus, for reading one or more information units from a memory unit at a location specified by the system address bus. The reading logic includes read request receiving and buffer logic having a plurality of storage locations for storing received read requests and associated read addresses prior to the execution of the read requests. The memory control unit further has logic for comparing a received read address to write addresses stored in the write address buffer, the comparing logic having an output for indicating, when asserted, the occurence of the reception of a read address having a value within a predetermined range of values of one of the stored write addresses.

26 Claims, 10 Drawing Sheets

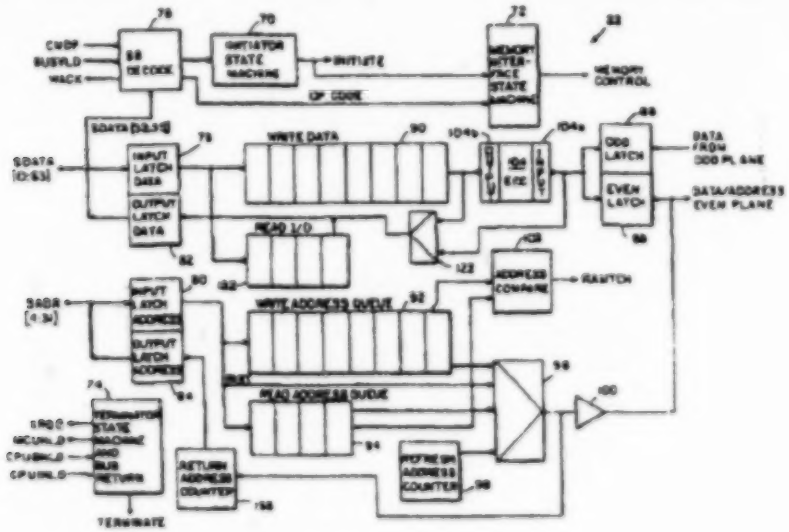

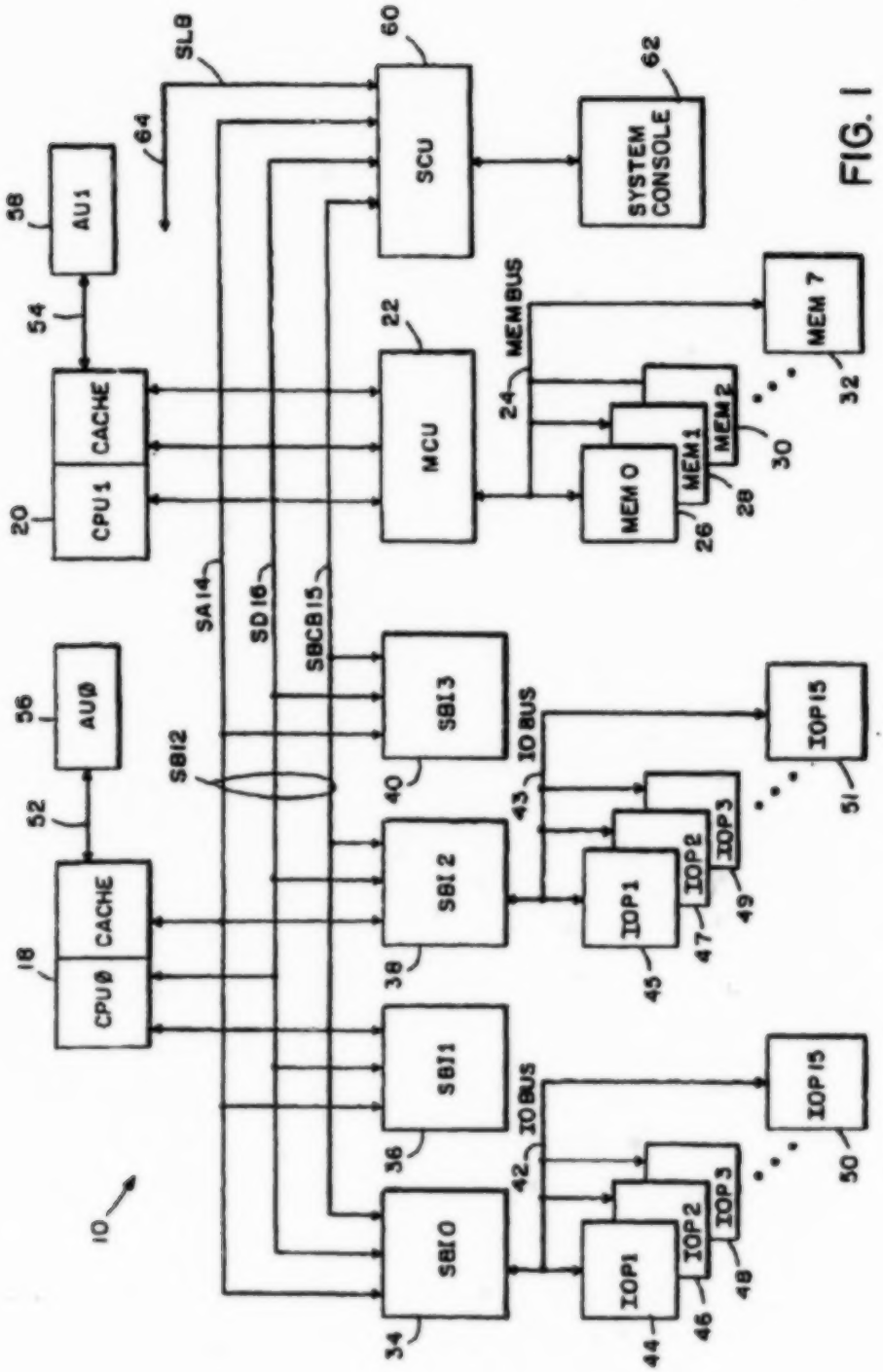
SL8
60
SCU
62
SYSTEM CONSOLE
64
38
AU1
54
CACHE
CPU1
20
22
MCU
MEM BUS
24
MEM 7
32
MEM 0
MEM 1
MEM 2
26
28
30
SA14
SD16
SBCB15
56
AUØ
52
CACHE
CPUØ
18
SBI2
SBI3
40
IO BUS
43
IOP15
51
IOP1
IOP2
IOP3
45
47
49
SBI2
38
SBI1
36
IO BUS
42
IOP15
50
IOP1
IOP2
IOP3
44
46
48
SBI0
34
10

FIG. 1

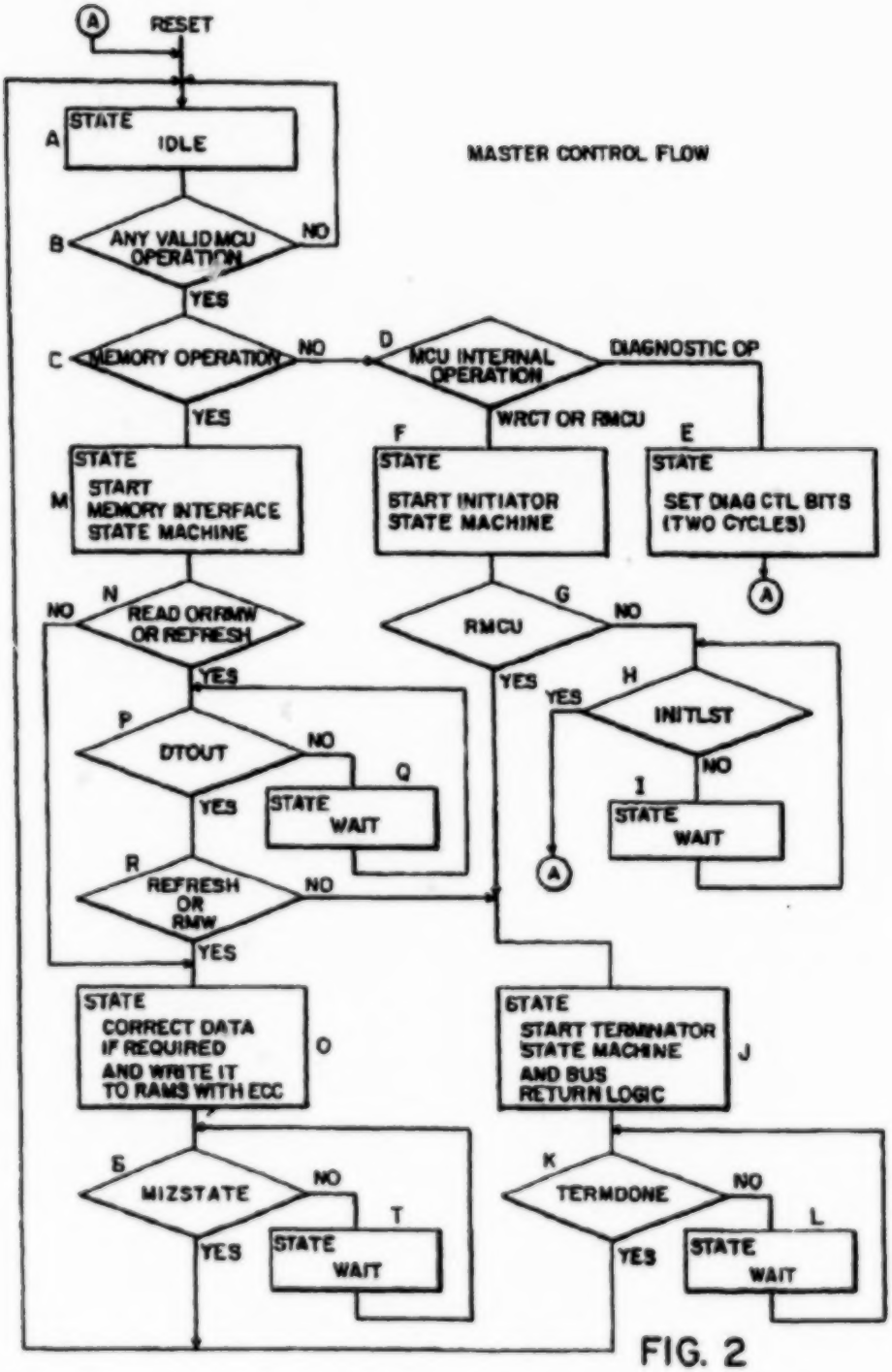
A
RESET
STATE
IDLE
MASTER CONTROL FLOW
B
ANY VALID MCU OPERATION
NO
YES
C
MEMORY OPERATION
NO
D
MCU INTERNAL OPERATION
DIAGNOSTIC OP
YES
WRCT OR RMCU
M
STATE
START MEMORY INTERFACE STATE MACHINE
F
STATE
START INITIATOR STATE MACHINE
E
STATE
SET DIAG CTL BITS (TWO CYCLES)
A
N
NO
READ OR RMW OR REFRESH
YES
G
RMCU
NO
YES
H
YES
INITLST
NO
P
DTOUT
NO
Q
STATE
WAIT
YES
I
STATE
WAIT
A
R
REFRESH OR RMW
NO
YES
STATE
CORRECT DATA IF REQUIRED AND WRITE IT TO RAMS WITH ECC
O
STATE
START TERMINATOR STATE MACHINE AND BUS RETURN LOGIC
J
S
MIZSTATE
NO
T
STATE
WAIT
YES
K
TERMDONE
NO
L
STATE
WAIT
YES

FIG. 2

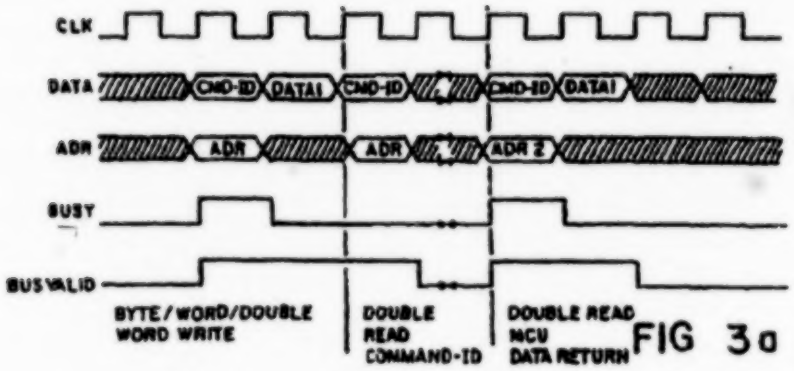

FIG 3a

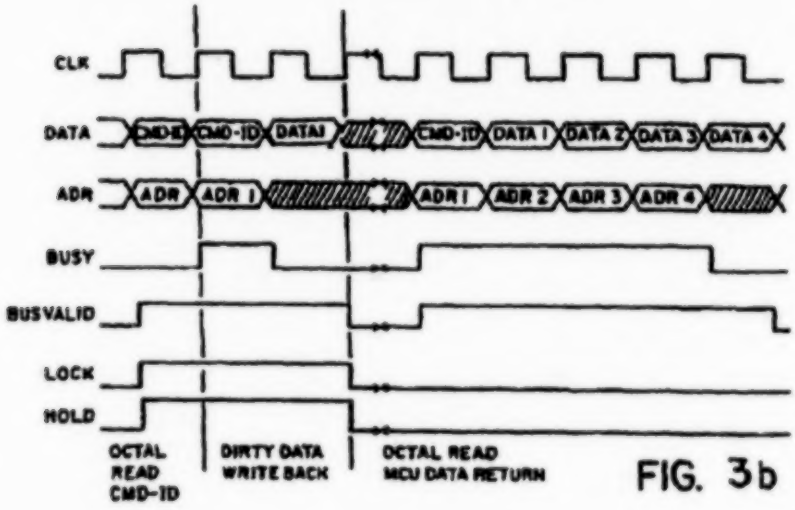

FIG. 3b

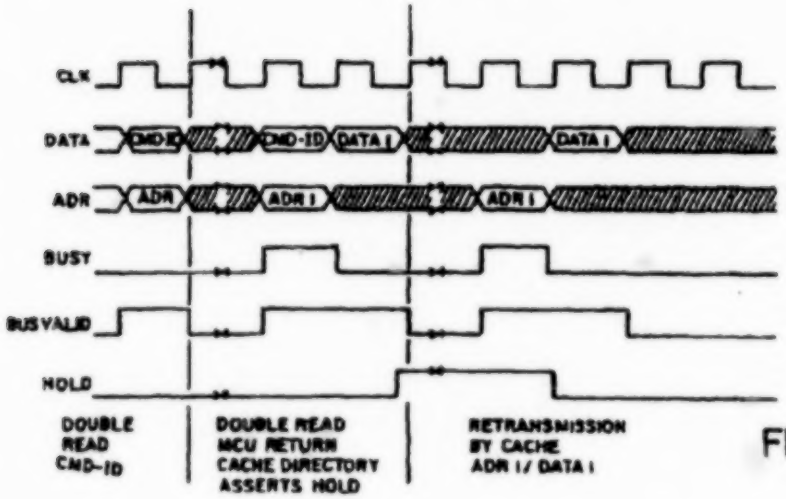

FIG. 3c

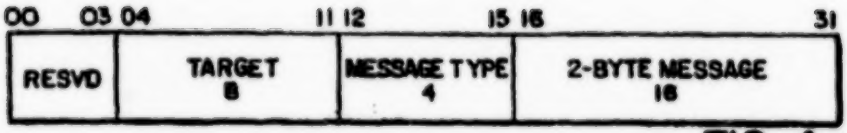

FIG. 4a

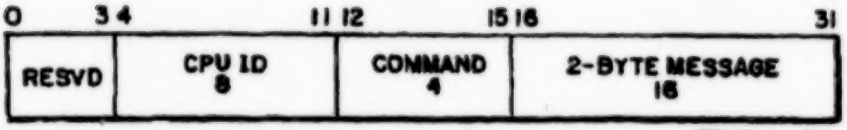

FIG. 4b

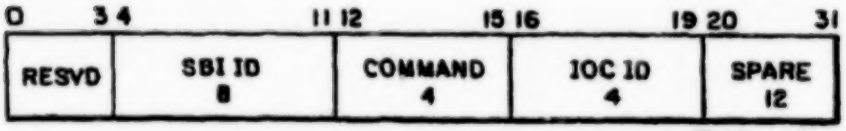

FIG. 4c

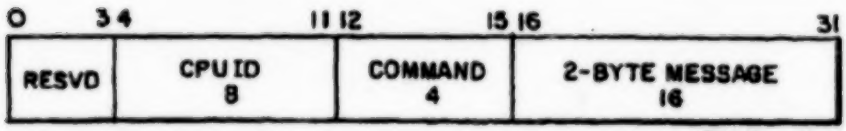

FIG. 4d

FIG. 4e

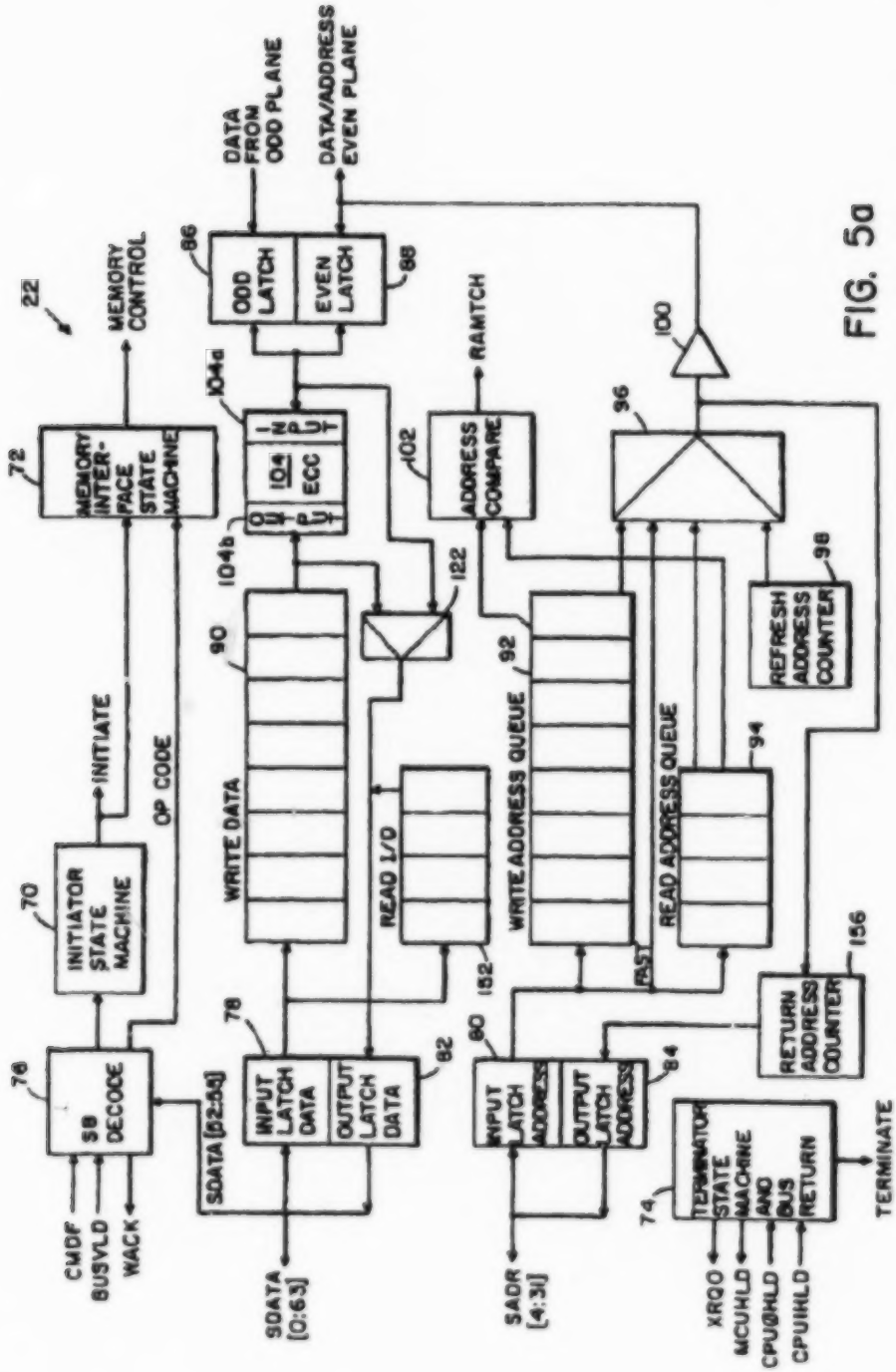
22
MEMORY CONTROL
72
MEMORY INTER-FACE STATE MACHINE
INITIATE
OP CODE
70
INITIATOR STATE MACHINE
76
SB DECODE
CMDF
BUSVLD
WACK
SDATA [52:55]
DATA FROM ODD PLANE
DATA/ADDRESS EVEN PLANE
86
ODD LATCH
EVEN LATCH
88
104a
104b
OUTPUT
104 ECC
INPUT
RAMTCH
102
ADDRESS COMPARE
100
96
122
90
WRITE DATA
92
WRITE ADDRESS QUEUE
READ I/O
152
READ ADDRESS QUEUE
94
FAST
98
REFRESH ADDRESS COUNTER
156
RETURN ADDRESS COUNTER
78
INPUT LATCH DATA
OUTPUT LATCH DATA
82
80
INPUT LATCH ADDRESS
OUTPUT LATCH ADDRESS
84
SDATA [0:63]
SADR [4:31]
74
TERMINATOR STATE MACHINE AND BUS RETURN
TERMINATE
XRQO
MCUHLD
CPUØHLD
CPUIHLD

FIG. 5a

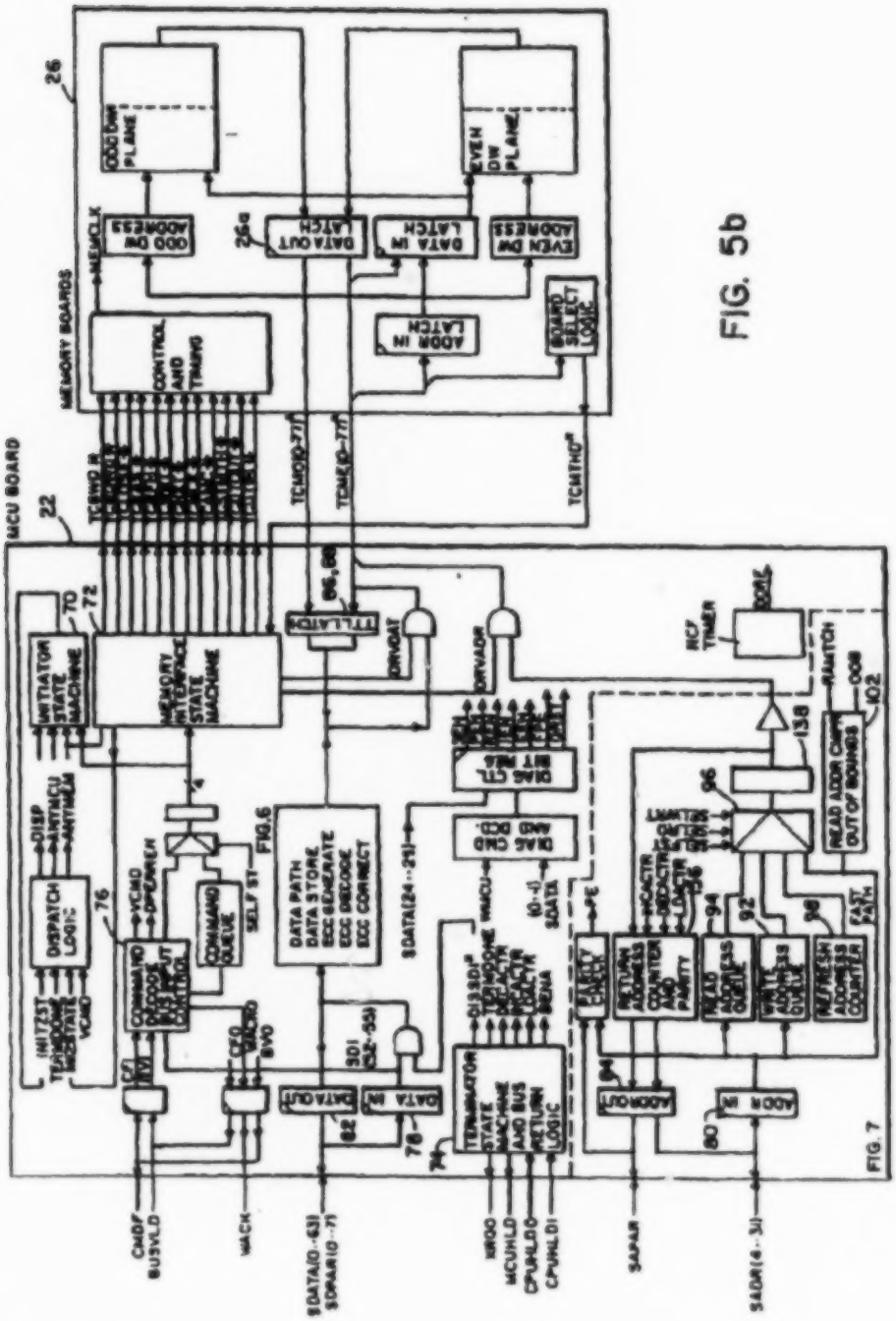
26
MEMORY BOARDS
MCU BOARD
22
CONTROL AND TIMING
DATA OUT LATCH
DATA IN LATCH
ADDR IN LATCH
BOARD SELECT LOGIC
INITIATOR STATE MACHINE
MEMORY INTERFACE STATE MACHINE
DISPATCH LOGIC
COMMAND QUEUE
DATA PATH
DATA STORE
ECC GENERATE
ECC DECODE
ECC CORRECT
TERMINATOR STATE MACHINE
RETURN ADDRESS COUNTER AND PARITY
READ ADDRESS QUEUE
WRITE ADDRESS QUEUE
REFRESH ADDRESS COUNTER
FAST PATH
FIG. 7

FIG. 5b

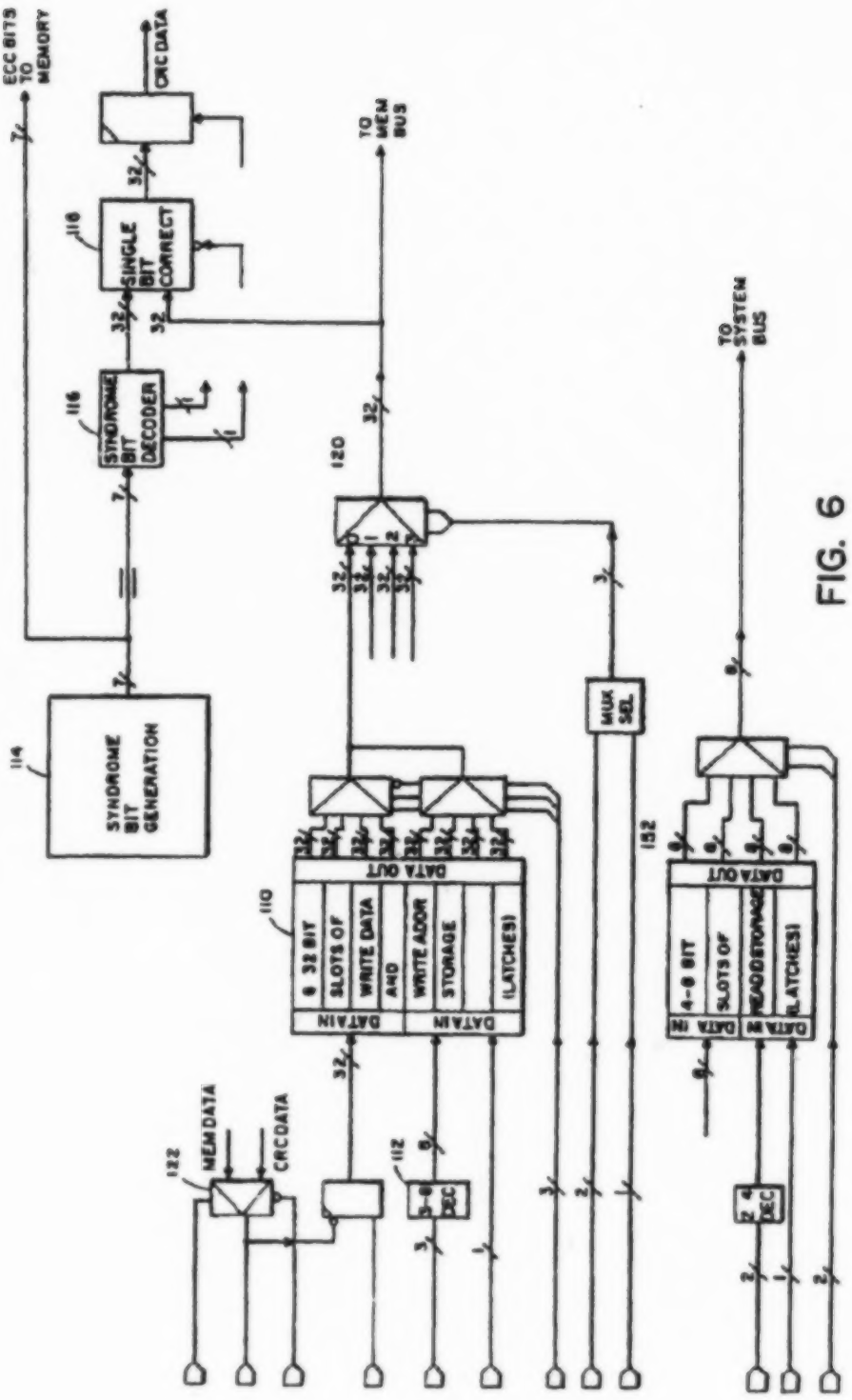
ECC BITS TO MEMORY
CRC DATA
TO MEM BUS
SINGLE BIT CORRECT
SYNDROME BIT DECODER
SYNDROME BIT GENERATION
MUX SEL
TO SYSTEM BUS
DATA OUT
DATA IN
MEM DATA
CRC DATA
DEC

FIG. 6

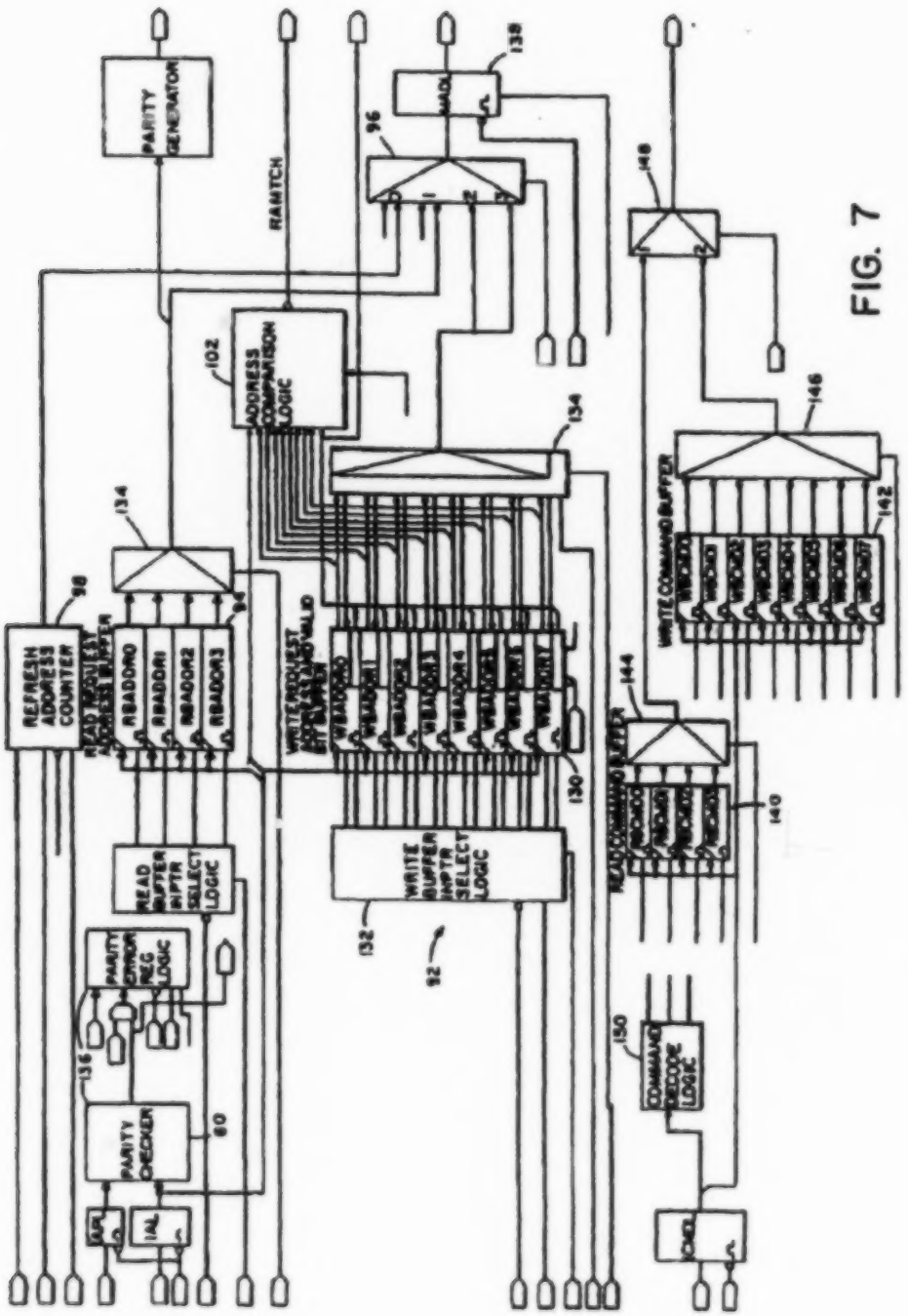
PARITY GENERATOR
RAMTCH
ADDRESS COMPARISON LOGIC
REFRESH ADDRESS COUNTER
READ REQUEST ADDRESS BUFFER
RBADDR0
RBADDR1
RBADDR2
RBADDR3
WRITE REQUEST ADDRESS AND VALID BIT BUFFER
WBADDR0
WBADDR1
WBADDR2
WBADDR3
WBADDR4
WBADDR5
WBADDR6
WBADDR7
READ BUFFER INPTR SELECT LOGIC
WRITE BUFFER INPTR SELECT LOGIC
PARITY ERROR REG LOGIC
PARITY CHECKER
COMMAND DECODE LOGIC
WRITE COMMAND BUFFER
READ COMMAND BUFFER
98
94
102
134
136
80
132
92
130
96
138
148
146
142
144
140
150

FIG. 7

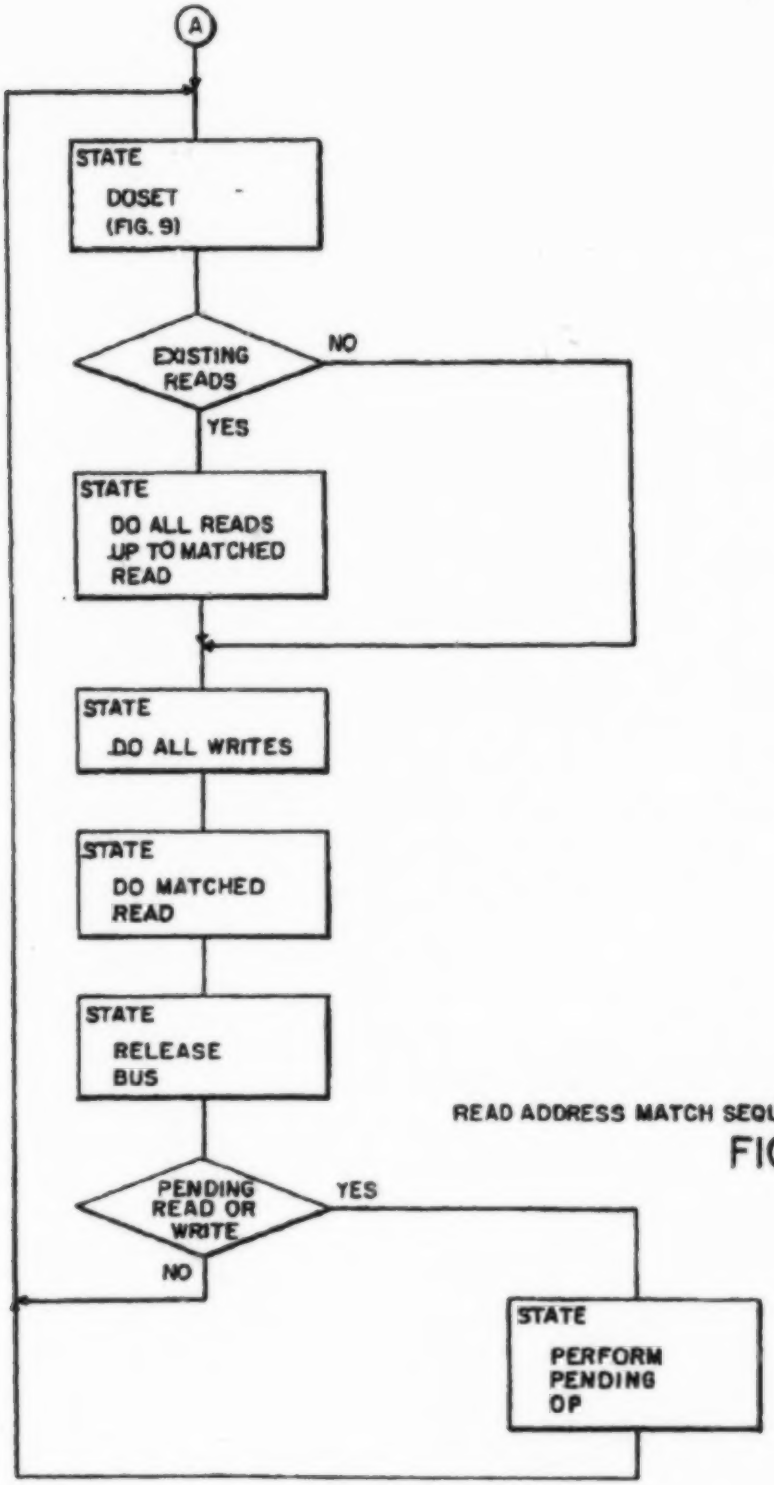

READ ADDRESS MATCH SEQUENCE

FIG. 8

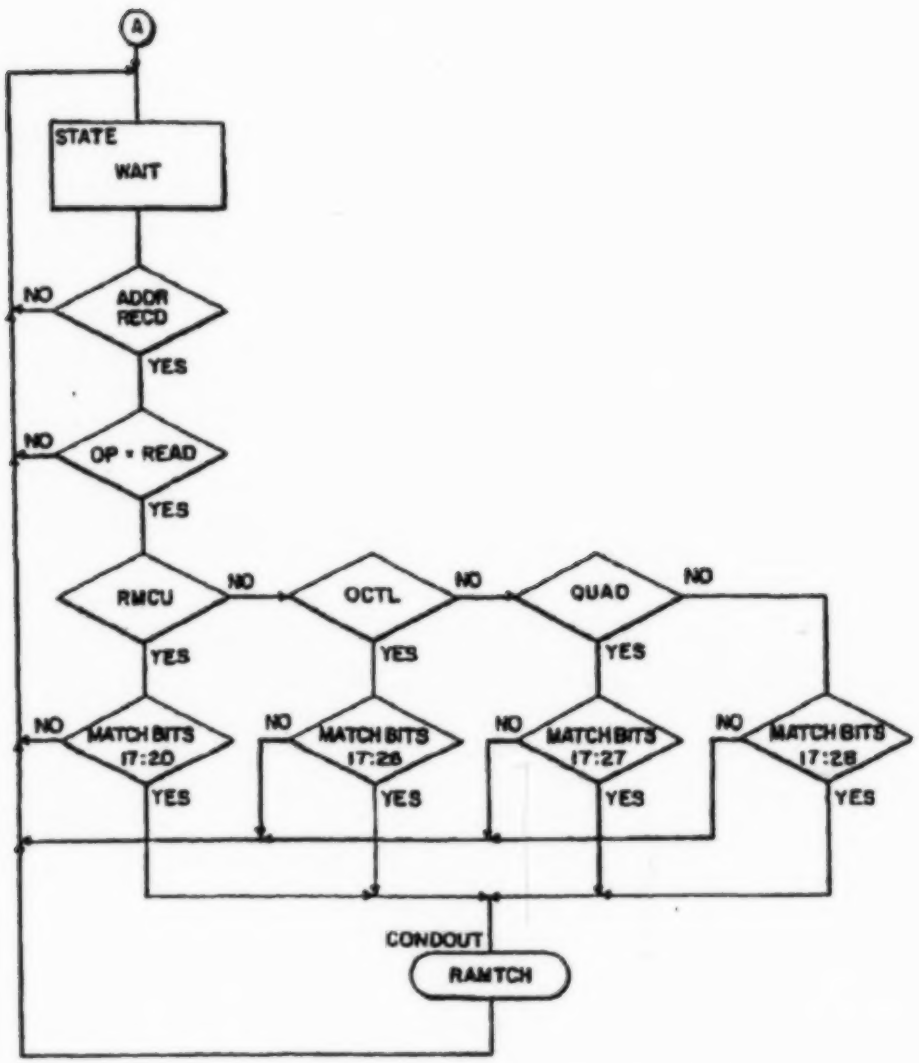

DOSET SUBROUTINE

FIG. 9

MEMORY CONTROL UNIT WITH SELECTIVE EXECUTION OF QUEUED READ AND WRITE REQUESTS

This is a continuation of copending application(s) Ser. No. 07/213,395 filed on Jun. 30,1988, now abandoned.

FIELD OF THE INVENTION

This invention relates generally to an information processing system and, in particular, to a memory control unit for coupling a system memory to a high speed, non-interlocked system bus.

BACKGROUND OF THE INVENTION:

In an information processing system which employs a central system memory for storing information units, such as operands and instructions, an important consideration is the coupling of the system memory to a central system bus. In order to achieve and maintain a desired system bus bandwidth it is important that data read and write operations which access the system memory occur in a rapid manner. It is also important, for those systems which employ one or more system bus units, or bus connections, that substantially simultaneous multiple read and write accesses which target a given memory location occur such that the read and write operations are correctly sequenced. That is, if one bus connection desires to read a given memory location while another bus connection desires to write the same location the sequencing of these two operations must be such that the data read reflects the current state of the data.

Related to both of the above considerations is an underlying goal of providing the data to a requesting bus connection without the introduction of errors resulting from hard or soft memory storage device errors. In this regard it has been known to provide additional memory storage devices to store error correction and detection syndrome bits which advantageously correct single bit errors and detect multiple bit errors occurring in data words stored within the system memory. It has also been known to provide, for memory systems which employ dynamic random access memories (DRAM), error "sniffing" and "scrubbing" techniques which detect and correct errors during the required memory refresh cycles.

It can be realized however that error detection and correction techniques require some finite amount of time to accomplish. During a read of the system memory this additional time is typically incurred for each memory access, resulting in a longer access cycle and a consequent reduction in the overall bandwidth of the system bus.

SUMMARY OF THE INVENTION

The foregoing problems are overcome and other advantages are realized by an information processing system constructed and operated in accordance with the invention. In accordance therewith a memory control unit comprises first interface means for interfacing the memory control unit to one or more memory units; second interface means for interfacing the memory control unit to a system bus, including a system data bus for expressing information units, including memory read and write requests, and a system address bus; means, responsive to a write request from the system bus, for storing one or more information units within a memory unit at an address specified by the system address bus, the storing means comprising write request receiving and buffer means having a plurality of storage locations for storing received write requests and associated write addresses prior to the execution of the write requests; and means, responsive to a read request from the system bus, for reading one or more information units from a memory unit at a location specified by the system address bus, the reading means comprising read request receiving and buffer means having a plurality of storage locations for storing received read requests and associated read addresses prior to the execution of the read requests. The memory control unit further comprises means, having a first input coupled to the write buffer means and a second input coupled to the read request receiving means, for comparing a received read address to write addresses stored in the write address buffer means, the comparing means having an output for indicating, when asserted, the occurrence of the reception of a read address having a value within a predetermined range of values of one of the stored write addresses.

In accordance with a method of the invention there is disclosed a method of reading and writing the information units which comprises the steps of buffering write requests, including write addresses, as they are received from a system bus; buffering read requests, including read addresses, as they are received from the system bus; and comparing when received each read address against buffered write addresses, if any, to determine if a received read address has a value within a predetermined range of values of a buffered write address. If a received address is not determined to be within the predetermined range of addresses of any buffered write addresses the method further comprises the steps of executing all buffered read requests; and executing all buffered write requests. If a received address is determined to be within the predetermined range of addresses of any buffered write addresses the method further comprises the steps of executing all buffered read requests up to but not including the received read request which was determined to be within the predetermined range of addresses; executing all buffered write requests; and executing the buffered read request which was determined to be within the predetermined range of addresses.

BRIEF DESCRIPTION OF THE DRAWINGS

The foregoing aspects of the invention will be made more apparent in the following detailed description of a preferred embodiment read in conjunction with the accompanying drawing wherein:

FIG. 1 is a block diagram of an information processing system having an embodiment of the invention;

FIG. 2 is a flow chart representation of a master flow of control of MCU 22;

FIGS. 3a, 3b and 3c are timing diagrams which illustrate the operation of the noninterlocked system bus;

FIGS. 4a–4e illustrates the format of various system IPC commands;

FIG. 5a is a block diagram which conceptually illustrates the MCU 22;

FIG. 5b is a block diagram which shows the implementation of the MCU 22 coupled to a memory array 26;

FIG. 6 is a block diagram which illustrates in more detail a portion of the circuitry of the MCU 22;

FIG. 7 is a block diagram showing in more detail other circuitry of the MCU 22;

FIG. 8 is a flow chart which illustrates the operation of the read address match circuitry; and

FIG. 9 is a flow chart which illustrates the operation of a portion of the associative address comparison as a function of read type.

DETAILED DESCRIPTION OF A PREFERRED EMBODIMENT

Referring to FIG. 1 there is shown an information processing system (SYSTEM) 10 incorporating a preferred embodiment of the invention. As seen, SYSTEM 10 comprises a System Bus (SB) 12 which further comprises a System Address Bus (SA) 14, a System Bus Control Bus (SBCB 15) and a System Data (SD) bus 16. SB 12 functions to convey information units between the various components of the SYSTEM 10. Information units may be addresses, I/O input or output data, operands, instructions or any other type of information which passes between the components of the SYSTEM 10. In the preferred embodiment of the invention SB 12 is a high speed, non-interlocked bus which operates at ECL voltage levels. That is, logic signals on the bus swing between approximately −0.9 volts and −1.8 volts.

Coupled to System Bus 12 are a plurality of system units, or bus connections, which include a first central processing unit (CPU0) 18 and an optional second CPU1 20. Also coupled to SB 12 is a memory control unit (MCU) 22 which has coupled thereto via a memory bus 24 one or more memory boards, such as MEM0 26, MEM1 28 and MEM2 30. In the preferred embodiment of the invention MCU 22 may be coupled to up to eight memory boards, such as the MEM7 32. Each memory board may store from, for example, four million bytes (4 MB) to 128 MB of information depending upon the type and quantity of memory devices installed. SB 12 also has coupled thereto one or more system bus interface (SBI) units, such as the SBI0–SBI3, 34, 36, 38 and 40, respectively. Each of the SBIs is further coupled to an associated I/O data bus (IODB), such as the IODBs 42 and 43 coupled to SBI0 34 and SBI2 38, respectively. Each IODB in turn has coupled thereto up to fifteen intelligent I/O processors (IOPs), such as the IOPs 44–50 and IOPs 45–51. In the preferred embodiment of the invention the IODBs 42 and 43 operate at TTL levels. That is, logic signals on these buses swing between approximately zero volts and +5.0 volts. CPU0 18 and CPU1 20 each comprise an associated high speed cache memory and are each further coupled via a cache data bus (CDB) 52 and 54, respectively, to an arithmetic unit (AU0) 56 and AU1 58, respectively. Also coupled to SB 12 is a support control unit (SCU) 60 having a system console (SC) 62 coupled thereto. A support link bus (SLB) 64 provides access and communications from the SC 62, via SCU 60, to the various units coupled to the SB 12. Diagnostic and other information, such as system initialization data, is generally provided over SLB 64.

In general, the CPUs 18 or 20 generate virtual memory addresses which are translated into physical addresses and issued over SA bus 14. Addresses are received and interpreted by MCU 22 for addressing, via the memory bus 24, instructions and data which are stored in the memory boards 26–32. Data and instructions are read and written over the SD bus 16 in accordance with the information conveyed by SBCB 15. Furthermore, SBIs 34–40 are also operable for transferring memory addresses and data over the system bus 12 for storing and retrieving data from the memory boards 26–32. It should be realized that one or more of the IOPs 44–51 may be coupled to a mass storage device such as a magnetic disk. Also, some of the IOPs may be coupled to data communications means operable for inputting and outputting data from the system 10. The IOPs may also be coupled to operator workstations where an operator enters data into the system.

In order to facilitate the description of the invention the operation of the SB 12 will now be described in further detail.

SB 12 is a synchronous, non-interlocked bus having a 64 bit data path and a 28 bit address path. SB 12 provides a peak interconnect bandwidth of 200 Mb/sec. and is, as previously mentioned, comprised of emitter coupled logic (ECL) drivers and receivers.

The following signals describe the System Bus 12 operation and protocol.

System Data (SDATA(0:63))

System Data Bus 16. All memory data traffic to and from bus connections is transferred via these 64 lines. In accordance with the invention when the CMD Flag, to be described, is asserted then certain of these lines are used to transmit Command-ID information, as described below in relation to CMD and ID.

Data Parity (SDPAR(0:7))

Odd Data Parity. One parity bit for each data byte, eight total, of SDATA 16.

System Address (SA(04:31))

System Address Bus. A bus connection transmits during a memory read or write cycle a memory address to the MCU 22 via these 28 lines. The MCU 22 thereafter drives these lines with the address of data read one bus cycle before the data is driven on the bus. Write-back caches coupled to the SB 12 use the MCU 22 driven address to make directory comparisons to determine if bus intervention is required and also drive the address lines during a cache re-transmission. Also, the system address lines, during an IPC transaction (to be described), convey the IPC message and other IPC related data.

Address Parity (SAPAR)

Odd Address Parity bit.

Command Flag (CMDF)

This line, when asserted by a bus connection, indicates that the SDATA Bus 16 is being used by the bus connection to transmit Command-ID information. When this line is not asserted and the bus is valid as indicated by BUSVLD, described below, CMDF indicates that SDATA 16 is transmitting data.

Command (CMD)

During a bus cycle when CMDF is asserted a bus connection places the type of command on SDATA [48:55]to initiate a memory operation or, in the case of the MCU 22, to return data to a requesting bus connection. The eight bit CMD field encodes the type of bus operation.

In the preferred embodiment of the invention the various types of bus operations encoded by the CMD field are as follows.

OPERATION
No Operation
Read Double Word
Read Quad Word
Read Octal Word

Write Byte
Write Word
Write Double Word
Data Return (transmission from MCU)
Transmit IPC
Read MCU
Write MCU

Other signals which comprise the SB 12 are as follows.

ID Each bus connection has a unique identifier (ID). During a bus cycle when a bus connection asserts CMDF the bus connection drives its unique ID onto SDATA [56:63]along with the bus command (CMD) on SDATA [48:55]. The MCU 22 drives the previously received and buffered ID of a bus connection which made a memory request when the data is returned to the requesting bus connection. During the assertion of a Transmit IPC command on SDATA[48:55]a bus connection drives the ID of the target of the IPC command on SDATA[56:63].

Busy (BSY)

This signal line is asserted by a bus connection during all cycles of a bus operation except the last cycle. BSY is sampled at the end of each bus cycle by all connections wishing to use the bus and indicates, when asserted, that the bus is in use and is unavailable to other bus connections. During a START IO IPC command directed to an IOP through an associated SBI the SBI continues to drive the BUSY line until communication is established with the target IOP and a determination is made as to whether the IOP has accepted the START IO command.

Bus Valid (BUSVLD)

This signal is asserted by a bus connection when valid information is placed on the bus.

Lock (LOCK)

Asserted by a bus connection when it is desired to prevent other bus connections (except the MCU 22) from using the bus. This signal line is utilized to implement semaphore instructions that perform read-modify-write operations.

CPU Hold (CPUHLD)

Two CPUHLD signals are provided, one for each CPU. This signal is generated by a CPU and is sampled at the end of each bus cycle by all other bus connections. This signal indicates that one of the write-back caches may be either retransmitting MCU 22 data or may be updating stored information. CPUHLD has the same effect as BSY; it indicates that the bus is still in use and unavailable to all other bus connections. Like BSY, CPUHLD is deasserted one cycle before the last bus cycle. It is also used by a CPU to interlock fetch/-writeback operations for the cache.

MCU Hold (MCUHLD)

Generated by the MCU and sampled at the end of each bus cycle by all other bus connections. In accordance with one aspect of the invention this signal indicates that the MCU has detected a correctable error and will be retransmitting during the next bus cycle the data in corrected form. The system bus protocol for MCUHLD is similar to that of CPUHLD.

Write Acknowledge (WACK)

Acknowledge generated by the MCU 22 in response to Write operations in the bus cycle following the data cycle and by target devices in response to Interprocessor Communication (IPC) operations.

Target Busy (TB)

This signal is generated by a target device in response to an IPC transmission. TB being asserted indicates that the target is busy and that the transmission was not accepted.

Bus Error (BUSER)

Asserted by any bus connection detecting a bus error.

Mem Exception (MEMX)

Asserted by the MCU 22 during the cycle following address transmission if an Invalid Memory Address is received or during the cycle following data transmission if a double bit, uncorrectable, memory error occurs during a memory read.

Xmit Rq In/Xmit Rq Out (XRQI/XRQO)

This signal is daisy chained between bus connections. A bus connection wishing to use the bus will assert Xmit Rq Out and start transmitting on the next cycle only if the following conditions are met:

Xmit Rq In from its higher neighbor is false;
Busy is False;
Hold is False; and
LOCK is False (Only if not an MCU).

A bus connection passes Xmit Rq In from its higher priority neighbor to Xmit Rq Out which is connected to its lower priority neighbor. In accordance with one aspect of the invention the MCU 22 is assigned to be the highest priority bus connection in the XRQI/XRQO daisy chain. This enables the MCU 22 to gain control of the bus in order to execute queued read and write requests, as will be described in detail below.

The timing diagrams of FIG. 3 illustrate various types of bus transactions including the operation of the multiplexed Command/ID and data path having an associated address which is presented during a bus cycle which precedes the presentation of data on SDATA 16. In the timing diagrams of FIGS. 3a–3c signal timing is referenced to the period of a system clock (CLK), the clock period representing approximately one bus cycle. In a preferred embodiment of the invention the basic timing unit or time interval, that is the period of CLK, is approximately 40 nanoseconds.

FIG. 3a shows a byte/half/word/double write immediately followed by the Command-ID portion of a double word (64 bit) read followed by an MCU data return of the requested double word.

FIG. 3b demonstrates the use of CPUHLD for a cache fetch/writeback. A CPU is shown sending Command-ID information to the MCU 22 for an octal word read and thereafter a double word cache write-back. The MCU 22 responds with the return of four double words. CPUHLD prevents another bus connection from using the bus during this sequence.

FIG. 3c further demonstrates the use of the CPUHLD line. A bus connection is shown requesting a double word read and the MCU 22 returning the requested double word. The cache or caches latch the address of the double word, and do directory look-ups in the following cycle. If a "dirty" match is found by a cache, that cache asserts CPUHLD shortly before the end of the cycle. The CPUHLD line prevents other connections from using the bus until the write-back cache re-transmits the double word along with its address and thereafter releases CPUHLD. BSY is asserted during the first cycle of retransmission and BUSVLD is asserted for two cycles if retransmission is performed.

An Interprocessor Communication (IPC) facility allows bus connections to directly communicate with one other by sending IPC messages. The bus protocol for sending these messages resembles a Write operation except that the Transmit IPC Command is used instead of a Write command. The address that is transmitted

along with the Command ID lines has the format indicated in FIG. 4a. The state of the eight Target field bits specifies a particular target, it being remembered that the ID of the target is conveyed by the ID field of SDATA[56:63].

TARGET

SCU
CPU0
CPU1
SBI0
SBI1
SBI2
SBI3

The 64 bit SDATA bus is used to transmit additional optional message data as required by the various IPC message types. FIGS. 4b, 4c, 4d and 4e illustrate, respectively, an IPC generated by an SBI 34, an IPC generated by a CPU which targets an IOP, an IPC generated by SCU 60 which targets a CPU and an IPC generated by SCU 60 which targets, via an SBI 34, an IOP.

Error Detection

There are four types of error detection mechanisms supported by the SB 12. These four types include:

Data Parity Error Detection: there are eight Data Parity Bits on the 64 bit Data Bus (one parity bit for each byte);

Address Parity Error Detection: there is one Address Parity Bit on the 28 bit Address Bus;

Missing Acknowledge: the Acknowledge control line is used to acknowledge Write and IPC transactions. Read operations are acknowledged by the MCU Data Return Command-ID cycle on the bus; and

Sequence Error: illegal bus control sequences are detected by the bus connections involved in a particular bus transaction.

Bus connections detecting any of the above errors assert the Bus Error line for one system bus clock cycle only. This notifies the SCU 60 of the error. The SCU thereafter retrives the Bus Error signal until the SCU 60 clears the error condition. The bus connection also stores the type of error (errors) in an SCU 60 accessible error register.

As has been previously stated, SB 12 is a noninterlocked bus. A significant reduction in bus cycles made possible by the noninterlocked SB 12 results in greater bus bandwidth made available for peak bus request rates and I/O traffic. Inasmuch as MCU 22 internally queues memory accesses a requesting bus connection is not required to incur the memory access time, thereby freeing the SB 12 for other requesters. If the requested access is a write operation the requester is notified as described above and, if the requested access is a read access, the data is later returned.

Referring now to the flow chart of FIG. 2 in conjunction with FIGS. 5a and 5b there is shown in block diagram form the MCU 22 coupled to a memory array 26 via the memory bus 24. MCU 22 is a buffered memory controller capable of performing read operations of up to an octal word length (32 bytes). The memory array 26 is organized as an odd and an even plane, each plane being of a double word width. As the controller of the system memory, the MCU 22 is operable for accepting requests for service from either the CPU0 or CPU1, the SBI 34 and the SCU 60. As has been previously stated, the MCU 22 may be coupled to up to eight memory arrays.

In general, the MCU 22 logically connects the System Data 16 and Address 14 buses to the memory arrays. In accordance with one aspect of the invention two data paths are provided for memory read operations. A first path is a fast data path which is used when no MCU 22 pending requests are stacked upon an internal queue. The fast path drives uncorrected data directly onto SB 12, the data simultaneously being provided to error detection and correction (ECC) circuitry. If a correctable error is discovered the MCU signals the receiving bus connection and thereafter drives the corrected data onto the bus. If the error is uncorrectable, such as a two bit error, the receiving bus connection is so notified. A second data path is a normal path which is employed when the MCU 22 has pending requests stacked upon the queues or does not otherwise have immediate access to SB 12. Inasmuch as MCU 22 must wait for access to SB 12 to return the requested data, the data is provided to the ECC circuitry before being driven out on to SB 12. It can be appreciated that the probability of an error occurring during any given memory read is relatively small, especially in that MCU 22 normally performs error correction during refresh operations, and that the use of the fast data path provides a significant increase in overall system bus bandwidth.

The MCU 22 comprises a plurality of state machines; including an Initiator State Machine (ISM) 70, a Memory Interface State Machine (MISM) 72 and a Terminator State Machine (TSM) 74. A System Bus Decode (SB DECODE) 76 logic block decodes SB 12 signals and provides outputs which are provided to the ISM 70 and MISM 72. In general, the ISM 70 provides signals which initiate the operation of MCU 22 in response to a read or write request. MISM 72 generates a plurality of output signals, shown generally as the signal MEMORY CONTROL, which is provided to the memory arrays. These signals include memory timing strobes and refresh related signals. The TSM 74 decodes certain of the SB 12 signals and provides other signals to the SB 12 which are utilized when the MCU 22 detects a data error during a data return. The TSM 74 also controls the sequencing of data and address latches used when data and command/ID information units are returned to the SB 12.

In this regard there is provided an input data latch 78, an input address latch 80, and a corresponding pair of output data and address latches 82 and 84, respectively. Between the MCU 22 and the memory arrays there are provided an odd memory plane data latch 86 and an even memory plane data latch 88. Memory addresses are multiplexed onto the even plane signal lines.

Write data from SB 12 is buffered in an octal double word latch, or queue, 90 and associated write addresses are buffered in an octal latch, or queue, 92. Thus, up to eight pending write requests may be buffered by the MCU 26. A quad read address latch, or queue, 94 buffers up four pending read requests. A four input multiplexer 96 selects the source of the address for a particular memory access from either the write address queue 92 or the read address queue 94. Another multiplexer 96 input is provided directly from the input address latch 80 and is employed for a fast memory access path when it is desired to bypass the queues. A refresh address counter 98 provides refresh addresses through multiplexer 96 during memory array refresh cycles. A buffer 100 buffers the selected output of multiplexer 96 onto the even plane signal lines.

In accordance with the invention an address comparison logic block 102 compares an address associated with an incoming read request to write addresses, if any, buffered in queue 92. If a match occurs a signal Read Address Match (RAMTCH) is asserted. RAMTCH being asserted causes normal processing of read and write requests to be suspended and buffered read and write requests to be executed. This aspect of the invention will be described in greater detail below.

MCU 22 also comprises error correction and detection logic 104 which is interposed between the odd and even memory data latches 86 and 88, respectively, and the write queue 90 and the output data latch 82.

In FIG. 2 there is illustrated the flow of control of MCU 22 in response to an MCU operation initiated by a bus connection or by an internally generated refresh request. After exiting an initial reset condition MCU 22 enters an idle state (A) which includes testing for the occurrence of a valid MCU 22 operation (B). If a valid MCU 22 operation is detected a further test is made (C) to determine if the operation is a memory operation, that is an operation which will access one of the memory arrays, or whether the operation is an internal operation. If the latter condition is true a further test (D) is made to determine if the internal operation is a diagnostic operation or an operation that reads or writes data to an internal MCU 22 resource, such as a read or a write to a reference and change table (RCT). If a diagnostic operation is indicated diagnostic control bits are set (E) and the idle state A is entered. If an access to an internal MCU 22 resource is indicated the Initiator State Machine 70 is started (F). A test is performed (G) to determine if the internal operation in progress is an RMCU operation, which requires that a data return be made to SB 12, or is a non-return type of operation, such as a write to the RCT. If the latter is true a test is made (H) to determine if the ISM 70 is idle and a wait state (I) is entered until ISM 70 is finished, at which time the Idle State A is reentered.

If a data return is required the Terminator State Machine 74 is started (J) and a test is made (K), with a wait state (L), until the data return is complete. At the completion of the operation of the TSM 74 the Idle State A is reentered.

At step C, if a memory operation is indicated, the Memory Interface State Machine 72 is started (M) and a test is performed (N) to determine if a read operation, read-modify-write operation, or if a refresh cycle is in progress. If none of these are true it is assumed that a write operation is in progress. Control branches during a write operation to a state (H) where the data is corrected, if required, and the data is written to the memory array. If test N determines that a read, RMW or refresh operation is in progress a test is made (P), with an attendant wait state (Q), for the assertion of a Memory Interface State Machine 72 signal DTOUT. The assertion of DTOUT indicates that a memory array is being requested to provide the data which is currently being indicated by the address being sourced on the even plane data/address signal lines. When the data is returned to MCU 22 a test is made (R) to determine if the data is to be driven onto SB 12 or is to be written back to the memory array (a refresh or RMW access). If the data is to be driven onto SB 12 the flow of control transfers to J where the TSM 74 is started. If the data is to be written to the memory array the flow of control transfers to block 9 where the data is corrected and written. Thereafter a test is made (S) with an attendant wait state (T) to determine if the Memory Interface State Machine 72 is idle, indicating the completion of the write cycle. Flow of control then passes back to the Idle State A.

Referring now to FIG. 6 there is shown in more detail a portion of the MCU 22 circuitry. The circuitry shown in FIG. 6 is, in a preferred embodiment of the invention, embodied in one of a pair of identical gate array devices which are utilized to buffer write data and addresses, buffer read ID data and perform E[illegible] functions. Each write data latch 110 storage location is one word, or 32 bits, in width. A 3-8 decoder 112 provides eight selection outputs for selecting one of the eight latches for storing write data.

BCC circuitry comprises syndrome and write check bit generation logic 114, a syndrome bit decoder 116 and single bit correction circuitry 118. A four input, 32 bit multiplexer 120 selects a source of data for application to the output memory data lines. Input memory data (MEMDAT) is applied to a 2 input multiplexer 122 which permits either the uncorrected memory data or corrected CRCDAT to be output to the system bus latches. During the aforedescribed fast read cycle MEMDAT is output. If an error is detected corrected CRCDAT is subsequently provided.

A four location 8 bit read ID latch 124 is provided for latching a SB 12 bus connection ID during a read access. This latched ID is later driven onto SB 12 during the return of the requested read data in order to identify the target of the data.

Referring now to FIG. 7 there is shown circuitry adapted for buffering read and write request addresses and commands. In a preferred embodiment of the invention the circuitry of FIG. 7 is also embodied in a gate array device.

A Write Request Address and Valid Bit Buffer 130 stores 28 address bits at locations determined by Write Buffer Input Pointer Selection Logic 132. A valid bit associated with each of the write buffer locations is set when an address is stored and is reset when the corresponding write operation is accomplished. One of the write addresses is selected by 8 input multiplexer 134 which supplies the write address to the memory address multiplexer 96. Other inputs to the memory address multiplexer 96 include the refresh address from the refresh address counter 98 and a read address from a four input read address multiplexer 134. Address parity logic 136 detects parity errors which may occur on the input read and write addresses. The output of memory address multiplexer 96 is latched by a memory address output latch 138.

A quad, two bit read command buffer 140 and an octal, two bit write command buffer 142 have outputs which are individually selected by multiplexers 144 and 146, respectively. The outputs of multiplexers 144 and 146 are applied to a read/write command multiplexer 148.

A Command Decode Logic 150 block decodes CMD bits 0, 2 and 3 to determine if an incoming requested read operation is a double word read operation, quad read operation, an octal read operation or a read operation which reads internal data from the MCU 22. These decoded outputs are applied to the Address Comparison Logic 102 block which, as has been described, performs an associative address comparison of all of the buffered write addresses against an incoming read request address. If a match is detected the RAMTCH signal is asserted which initiates special processing of

the read and write buffers. As shown in the flow chart of FIG. 9, depending upon the type of read operation different numbers of bits are compared between the incoming read address and the queued write addresses. For example, during an octal read 10 address bits (17:26) are compared, during a quad read 11 bits (17:27) are compared while a double word read compares 12 address bits (17:28). During an internal read, typically of the RCM, only four bits are compared; these bits corresponding to a memory address page frame associated with the reference and change table.

Due to the noninterlocked operation of the SB 12 the MCU 22 buffers incoming read and write requests, normally allowing incoming reads to proceed ahead of buffered writes. The MCU 22 comprises the address comparison logic 102 to properly sequence the execution of requests in the event that an incoming read address matches, within a predetermined range of memory addresses, a buffered write address. In this case, the queued read and write requests are executed before the read request which caused the match proceeds. The logic employed to perform the match function implements an associative address comparison of all buffered write addresses versus an incoming address associated with a read operation. The least significant twelve bits of the incoming read address are compared down to the double word level, depending on the type of requested operation, that is, on the decoded output of command decode logic 158.

All read requests performed by the MCU 22 are of a double word width or more. The MCU 22 may also perform quad word reads and octal word reads efficiently as the MCU 22 comprises a quad word width incoming data path from the memory boards. During an octal read, the MCU 22 receives two quad words from a memory array, separated in time by three memory clock cycles. This allows the return of data to the requester with a minimum number of wait states once the first double word of data is driven onto the SB 12. Write requests to the MCU 22 may be of byte, word, or double word width. Write requests of less than a word width (byte writes) force a read-modify-write cycle to be executed by the MCU 22.

SB 12 permits a bus connection to send the MCU 22 multiple back-to-back memory write requests. Bus re-arbitration is not necessary during each double word transfer as the SB 12 can be held by the bus connection using the aforedescribed LOCK signal line. This SB 12 LOCK condition may be maintained for up to an octal word write (four time-contiguous write operations). Re-arbitration must be performed, however, after at most every octal word write as the MCU 22 must be capable of requesting and receiving ownership of the system bus after each write transfer.

The MCU 22 has the capability to stop a bus connection after any write request and hold the bus in a quasi-busy state should the Write Buffer fill after a given write request. The same quasi-busy state may be established by the MCU 22 when the Read Buffer fills. This allows the MCU 22 to hold off further bus requests until it can at least partially empty the full buffer. As has been previously stated, the XRQO signal line of SB 12 is used for this purpose. The MCU 22 is defined to be the highest priority device on SB 12 and its XRQO line will force other requesters to hold their bus operations until the MCU de-asserts the XRQO line.

As has been stated, the Write Address is stored within the latch 130 which is used during the associative address compare. This latched storage permits all eight possible queued Write Addresses to be accessible during the associative address compare. The address compare is performed when a Read operation is decoded from the CMD (0:3) lines which are been latched from the System Bus 12. As has also been stated, the associative compare generates a bit, called the RAMTCH (Read Address Match) bit. This bit being asserted serves as a flag which indicates that special sequencing is required by the MCU 22. The RAMTCH bit being asserted causes the bus interface controller to assert XRQO to lock SB 12 to prevent the entry of a further Write request into the Write Buffer. Then, no further Write requests are accepted from the System Bus 12 until the MCU 22 has cleared the RAMTCH flag by performing a RAMTCH operation sequence. The RAMTCH operation sequence is illustrated in the flow chart of FIGS. 8 and 9.

The assertion of the RAMTCH flag indicates that a requested read operation will read a location which has a write request pending as well. The write request should preferably proceed ahead of this read request otherwise old data may be returned to the requester and data integrity may not be preserved. In accordance with one aspect of the invention the requests queued in Read Buffers 94 and 140 are executed to the point where the Read request which caused the assertion of the RAMTCH bit is encountered. Before this Read operation can proceed, the requests queued in Write Buffers 90 and 92 are executed, including the queued Write request which triggered the assertion of RAMTCH. The Read operation is then accomplished and the data returned to the requester reflects the result of the just executed Write operation. SB 12 is then released so further system bus activity may occur.

It should be noted that the assertion of the RAMTCH signal indicates that the Write Buffer contains at least one, and possibly more, write operations that must complete before the read request which caused the assertion of RAMTCH can start. As has been stated, the state of the Write buffer contents must be frozen at this point. This is done to the fact that all pending Write requests are executed before the execution of the Read request which caused the match. If another write operation were allowed to enter the Write Buffer, this operation may have as a target the same location that the matched Read operation desires. If the data from this later Write operation is allowed to enter the system memory during the flush of the Write Buffer, the Read operation may read data which is too "new" for it. Thus, further writes must be halted until the read which set the RAMTCH completes. The following illustrate memory request sequence illustrates the foregoing description of the operation of MCU 22.

SEQUENCE OF REQUESTS TO MCU

Read A
Read B
Write X
Read X
Write Y
Write X

If it is assumed at the start of the foregoing sequence that no requests are pending in the Write Buffer and the Read Buffer then Read A and Read B will proceed normally, that is, the RAMTCH bit will not be asserted. Write X is placed into the Write Buffer to be written to the system memory when the Read Buffer is empty.

Read X then enters the MCU 22 and forces the assertion of the RAMTCH bit due to the associative address compare of the incoming Read X address with the address of Write X. The assertion of RAMTCH also causes the MCU 22 to lock the System Bus 12 to prevent the entry of further Write requests. Meanwhile, Write Y has entered the System Bus Latch on the MCU 22. Write Y is the last operation that can enter the MCU 22 until the MCU 22 releases the bus. However, the Write Y request is not processed until the read requests within the Read Buffer are executed. The Write Y request is placed into the Write Buffers and is specially marked, as will be described, so that it will not commence until the previous Read X operation has completed.

Inasmuch as no further requests can now be received from SB 12 the MCU 22 completes the Read B operation and then executes the pending requests in the Write Buffer, due to the RAMTCH bit being asserted for the Read X operation. The MCU 22 thereafter completes the Read X operation. At the completion of this operation, the system Bus 12 is released by the MCU 22 so that the Write Y operation can commence and the Write X operation can enter the MCU 22 and execute in its turn.

Were the SB 12 not halted at the Write Y operation, the second Write X operation could enter the Write Buffer before the execution of the Read X. After Write Buffer request execution, the data from the second Write X operation would be read by the Read X operation and erroneous data may be returned to the requester.

A Read request entering the MCU 22 which finds no queued Read requests is directed immediately to the memory arrays for execution. This allows a minimum latency for a read request from the requester's viewpoint. Write requests entering the MCU 22 are immediately buffered unless the MCU 22 is in the Idle State (FIG. 2), whereupon the execution of the Write request is immediately begun. The buffering of Write requests allows Write requests to enter the MCU 22 while a Read operation is in progress. Read and Write requests may thus enter the MCU 22 while other operations are in execution so long as the RAMTCH flag is not asserted. The operation of MCU 22 then proceeds, allowing reads to execute and writes to be buffered while the reads are executing. At a point in time where all Read requests have been executed and no further Read requests are incoming from the System Bus 12, the execution of queued Write requests, if any, begins. If there are no queued Read or Write requests and no incoming operation from SB 12, the MCU 22 is considered to be in the Idle State.

During read operations, if a predetermined number of Write requests become queued ownership of SB 12 is requested by the MCU 22. All buffered Read requests are then executed and at least one Write request is executed before the MCU 22 again releases SB 12. The same sequence is followed if a predetermined number of Read requests accumulate. This prevents loss of memory operations due to buffer overflow. As the MCU 22 is the highest priority device on the System Bus 12 during normal operation (it is first on the XRQ0/XRQ1 daisy chain), it can effectively become the SB 12 master at any time. However, inasmuch as the SB 12 is essentially pipelined, one further memory operation may enter the MCU 22 System Bus Latch before the MCU 22 gains bus control. This further memory operation, as was previously mentioned, is marked until such time as the MCU 22 can again allow a normal flow of requests to proceed.

The predetermined number of pending Write requests is preferably set at four double words due to the operation of the write-back cache memory associated with CPU0 18 and CPU1 20. That is, the MCU 22 must be ready to accept at anytime a cache write-back of four double words. Thus, by maintaining a maximum number of pending Write requests of four a cache write-back may be accommodated at anytime.

During memory refresh, all memory array boards are refreshed simultaneously. In addition, data "sniffing" and "scrub" cycles are performed at this time, with one double word being read back from one bank of the dynamic RAM memory. Thus, the refresh cycle is similar to an extended double word read. If an error is detected, the error is corrected and the corrected data is returned to the memory arrays. During a normal double word read, only one division of a memory array (upper or lower) receives the RAS and CAS strobes while the other division remains in a standby mode (no RAS, no CAS). During refresh, both divisions receive RAS simultaneously. During the aforementioned storage of a corrected double word the memory array division receiving the corrected data will further have its associated CAS strobe asserted.

A refresh cycle normally requires six memory clock cycles to complete, assuming that no error is detected. If an error is detected and is correctable, the refresh cycle requires an additional write double word access time of five cycles.

The sniff logic corrects and writes back any single bit errors. This has the effect of periodically scrubbing the memory clean of single bit errors. Each time a refresh operation is performed, a double word of data is read and, if necessary, corrected and written back to the location from which it came. Refresh addressing logic contains up to 10 bits for the RAS portion of the address and 15 address bits to be divided between the CAS portion of the address, decoding logic to determine a memory board to be selected for a read, and bank decode logic to select the bank and division (upper/lower) to be read.

The MCU 22 has a number of paths through which address information can flow. The normal path is for the address to enter through the Input Address Latch 80 and then into the Write/Read Queues 92 and 94. Once placed into the Write/Read Address Queues 92, 94, the address remains there until that particular write operation is called up for execution. In the case of an idle MCU, the address effectively bypasses the queues and is immediately applied, or set up, to the memory, therefore expediting read and write operations.

Data that is to be written to the main memory is passed through the 4 to 1 multiplexer 120. The output of multiplexer 120 is provided to several destinations. One of these destinations is directly to the memory arrays. Another destination is the ECC encode/decode logic where the check bits are generated and sent directly to memory with the data on a memory write operation. The data and check bit signal lines are bi-directional. This allows data and check bit output during a write operation. During a memory read, the direction is reversed.

A more complex data path exists for read-modify-write operations. Such operations require that a double word of data be read from a memory unit and that the

data be checked for errors. If an error occurs the error is corrected and the corrected data is merged with a byte of data which has been stored in the Write Buffer 118. This is accomplished using the multiplexer 120 and selecting, on a byte basis, the source for the multiplexer to be either the latched and corrected read data or the Write Buffer output. The merged data is thereafter re-encoded and sent to the memory by the same path as a normal write operation.

The ID of a bus connection to which data is to be returned is buffered in Read ID storage latches 152 and is multiplexed onto the SB 12 data path during the MCU 22 data return cycle. During a read operation, while the MCU 22 awaits the return of data from a memory array, MCU 22 sets up the return ID and address for the SB 12 Data Return cycle. One cycle before the data is sent over SB 12, the requester's ID, a Data Return Command, and the address originally provided by the requester are returned to the requester. If any delay is incurred in obtaining ownership of the system bus, the Data Return cycle is delayed. Resource conflicts are avoided by use of the latches 82 and 84, where the return Command, ID and Address are stored until driven onto the bus.

If a correctable error occurs, the data path multiplexer 122 (a 2 to 1 multiplexer) is flipped. One side of this multiplexer 122 receives inputs directly from the memory. The other side receives latched, corrected data from the output of the ECC circuit. Thus, if an error is detected, the corrected data can be sent rapidly by flipping the data output multiplexer 122. At the same time the corrected data is being returned to the requester, the next double word of data (if a multiple double word transaction) is being latched for transmission during the next cycle. If it too is in error it will be sent and then corrected during the following cycle and re-transmitted as was the first double word.

The MCU 22 of the invention also provides correct data when more than one double word of a multi-double word read request is in error. In this case latches back to those on the output of the memory arrays can be used to hold the data until the MCU 22 can process it. A four-stage pipeline is provided to accommodate all possible cases of erroneous data appearing in double words. The four stages comprise latches 24a on the output of the memory arrays (FIG. 5b); latches 82 and 84 at the input of the MCU; and latches 104a and 104b (FIG. 5a) at the input and output, respectively, of the ECC logic 104.

The MCU 22 has both a fast and an internal address path. Whenever the MCU 22 is in the Idle State (not processing any requests with none stored in either the read or write buffers), an incoming operation (either read or write) is begun immediately. The address path is steered toward the fast path. This allows a direct path from the system bus input latches to the drivers on the edge of the MCU 22. If the operation is an MCU internal function (Read or Write MCU), the MCU 22 will begin the operation immediately and will respond (if data is to be sent to the requester) within two cycles after the request enters the MCU. The address will be sent to the memory arrays but the row address strobe (RAS) signal, which initiates all memory operations, is not generated.

The internal path is used if an incoming request must await completion of a previously buffered operation. This path takes the address from the system bus holding latch directly into either the Read Buffer Address latches or the Write Buffer Address latches, 94 and 130, respectively.

An address parity check is performed when addresses enter the MCU 22 as well as an Out of Bounds check. If an error is detected, the BUSERR line is asserted to so indicate. If an address error is detected when a request enters the MCU 22, the MCU will not buffer the operation and will not execute it. It is as if the operation were never sent except that the MCU must notify the SCU 60 of the parity error on the address. In the case of the Out of Bounds check being true, the requested operation has a target location outside the region of available memory, the MCU 22 will assert the MEMX signal line two cycles after the address cycle and will ignore the operation. This condition will be reported to the SCU 60.

When a read operation is performed, the return address is inputted into the latch 84 for return to the requester. The Physical Frame Bits (address bits 04:20) are held in a secondary latch. The page offset bits down through bit 28 (address bits 21:28) are passed through an up/down counter 186 so that the base address may be incremented by the MCU 22 for multi-double word returns. The counter requires up/down capability due to the need to send corrected data after the incorrect data is initially sent (this is during a correctable error sequence). LSB address signals 29:31 are zeroed before being returned from the MCU 22. Parity is generated once on address bits 04:20 and is re-generated over bits 21:28 and is then combined with the upper bit address parity every cycle during a multi-double word data return.

Due to the high speed of SB 12 the MCU 22 decodes the ECC error bits on the fly, as it is sending the data back to the requester. The fast data path actually bypasses the error correction logic and data is returned to the requester, even though it may contain an error. If it does contain an error, the data must be corrected and re-transmitted to the requester during the following cycle. In order to accomplish this function the SB 12 signal line MCUHOLD is provided. MCUHOLD is driven by the MCU to all other bus connections in order to notify the other bus connections of the MCU's intention to retain ownership of SB 12 even though it has released BUSY. MCUHOLD, in turn, is driven, at least in part, by the Single Bit Error Detect logic.

When the check bits are encoded and are sent to memory, the properties of the code which produce them are that exactly three copies of each of 32 data bits go into the formation of seven check bits per each word in a double word. When the check bits return from memory, each one is exclusive ORed with the particular data bits that corresponded to each check bit when generated. Thus, the information contained within these seven bits determines whether there are no bits in error, whether there is a single bit in error, or whether there are multiple bits in error. A single bit error is correctable while multiple bits in error are not. If the seven check bits are all logical zeroes, then there are no bits in error. If there is a single bit in error, then three of the seven check bits will be a logical one. An even number of ones set within the seven check bits indicates that there are at least two bits in error. In the case of a single-bit error, the parity of the check bits alone will be odd. Thus, a simple way to determine quickly that a single-bit error exists by determining the parity of the seven check bits.

The occurrence of a double bit error need not be indicated until one cycle after the data has been re-

turned. To indicate the occurrence of a double bit error the MEMX signal line is pulsed high. The address having an uncorrectable error and the associated syndrome pattern is reported to the SCU 60 via the SLB 64.

The invention described above may be embodied in yet other specific forms without departing from the spirit or essential characteristics thereof. Thus, the present embodiments are to be considered in all respects as illustrative and not restrictive, the scope of the invention being indicated by the appended claims rather than by the foregoing descriptions, and all changes which come within the meaning and range of equivalency of the claims are therefore intended to be embraced therein.

What is claimed is:

1. A memory control unit for controlling a main system memory of a data processing system, the main system memory being comprised of at least one memory unit, comprising:

first interface means for coupling said memory control unit to the at least one memory unit of the main system memory;

second interface means for coupling said memory control unit to a system bus having signal lines for expressing information units, including memory read and write requests, the system bus including a system address bus;

means, coupled to said first and to said second interface means and responsive to a write request from said system bus, for executing the write request by storing one or more information units within a memory unit at an address specified by the system address bus, said write request executing means comprising write request receiving and buffer means having a plurality of storage locations capable of storing a plurality of received write requests and associated write addresses prior to execution of the write requests;

means, coupled to said first and to said second interface means and responsive to a read request from said system bus, for executing the read request by reading one or more information units from a memory unit at a location specified by the system address bus, said read request executing means comprising read request receiving and buffer means having a plurality of storage locations capable of storing a plurality of received read requests and associated read addresses prior to execution of the read requests;

said memory control unit further comprising:

means, having a first input coupled to said write buffer means and a second input coupled to said read request receiving means, for comparing a received read address to write addresses stored in said write address buffer means, said comparing means having an output signal for indicating, when asserted, an occurrence of the reception of a read address within a predetermined range of addresses of one of said stored write addresses; and

means for controlling the execution of read and write requests, said controlling means being coupled to said comparing means output signal and being responsive to said comparing means output signal not being asserted for causing an execution of all buffered read requests before any buffered write requests, said controlling means further being responsive to said comparing means output signal being asserted for first causing an execution of only those buffered read requests which precede a buffered read request which caused the assertion of said comparing means output signal and then causing an execution of buffered write requests.

2. A memory control unit as defined in claim 1 wherein said controlling means further comprises means coupled to said second interface means and responsive to the assertion of said comparing means output signal for preventing a reception of any further read or write requests from said system bus until the execution of all buffered write requests.

3. A memory control unit as defined in claim 1 and further comprising:

means, coupled to said second interface means and responsive to an execution of a read request, for returning one or more information units to said system bus; and

error detection and correction means for detecting and correcting a single bit error in an information unit returned to said system bus, thereby generating a corrected information unit, and including means for subsequently providing the corrected information unit to said returning means.

4. A memory control unit as defined in claim 3 wherein:

said second interface means comprises means for requesting and receiving access to said system bus; and

said returning means is responsive to the operation of said second interface means for returning an information unit to said system bus prior to a completion of the operation of said error detection and correction means, said returning means being coupled to said error detection and correction means for receiving a corrected information unit therefrom for returning the corrected information unit to said system bus at a time subsequent to a time when an information unit having a single bit error is returned to said system bus.

5. A memory control unit as defined in claim 4 wherein said returning means comprises means for indicating on said system bus that an information unit being returned has a bit in error.

6. A memory control unit as defined in claim 3 wherein said error detection and correction means further comprises means for detecting multiple bit errors in an information unit returned to said system bus, and wherein said returning means further comprises means for indicating on said system bus that an information unit being returned has more than one bit in error.

7. In an information processing system having a system bus for coupling together a plurality of bus connections, one of the bus connections being a memory control unit coupled to one or more memory units, the memory control unit being responsive to address and data signal lines of the system bus for writing information units to and for reading information units from the memory units, a method of reading and writing the information units comprising the steps of:

buffering write requests, including write addresses, as they are received from the system bus;

buffering read requests, including read addresses, as they are received from the system bus; comparing when received each read address against buffered write addresses, if any, to determine if a received read address has an address value within a prede-

termined range of address values of a buffered write address;

if a received address is determined not to be within the predetermined range of addresses of any buffered write addresses then:

first executing in sequence all buffered read requests; and

then executing in sequence all buffered write requests;

else if a received address is determined to have an address value within the predetermined range of address values of any buffered write address:

first executing in sequence all buffered read requests up to but not including the received read request which was determined to be within the predetermined range;

then executing all buffered write requests; and

then executing the buffered read request which was determined to be within the predetermined range.

8. The method of claim 7 wherein the first step of executing when a received read address is determined to be within the predetermined range of addresses includes an initial step of asserting a system bus signal which prevents other bus connections from issuing any further read requests or write requests.

9. The method of claim 7 wherein the steps of executing in sequence all buffered read requests are accomplished by:

applying a read address to the memory units;

retrieving an information unit from a memory unit storage location corresponding to the applied read address;

applying, during a first interval of time, the retrieved information unit to an error detection and correction unit to determine if the retrieved information unit has at least one bit in error, the error detection and correction unit further including means for correcting a single bit error in the retrieved information unit; and

driving, during the first interval of time, the retrieved information unit onto the system bus data lines.

10. The method of claim 9 wherein if the error detection and correction unit indicates that the retrieved information unit has a bit in error further comprises the steps of:

asserting a system bus signal for indicating that the retrieved information unit has a bit in error; and

driving during a second, later interval of time the corrected information unit onto the system bus data lines.

11. The method of claim 9 wherein if the error detection and correction unit indicates that the retrieved information unit has more than one bit in error further comprises a step of asserting a system bus signal for indicating an error condition.

12. The method of claim 11 wherein if a received read or write address has a value which exceeds a predetermined maximum value further includes a step of asserting the system bus signal that indicates the error condition.

13. A memory control unit for controlling a main system memory of a data processing system, the main system memory being comprised of at least one memory unit, comprising:

first interface means for coupling said memory control unit to the at least one memory unit of the main system memory;

second interface means for coupling said memory control unit to a system bus having signal lines for expressing information units, including memory read and write requests, the system bus including a system address bus;

means, coupled to said first and to said second interface means and responsive to a write request from said system bus, for executing the write request by storing one or more information units within a memory unit at an address specified by the system address bus, said write request executing means comprising write request receiving and buffer means having a plurality of storage locations capable of storing a plurality of received write requests and associated write addresses prior to execution of the write requests;

means, coupled to said first and to said second interface means and responsive to a read request from said system bus, for executing the read request by reading one or more information units from a memory unit at a location specified by the system address bus, said read request executing means comprising read request receiving and buffer means having a plurality of storage locations capable of storing a plurality of received read requests and associated read addresses prior to execution of the read requests;

said memory control unit further comprising:

means, having a first input coupled to said write buffer means and a second input coupled to said read request receiving means, for comparing a received read address to write addresses stored in said write address buffer means, said comparing means having an output signal for indicating, when asserted, an occurrence of the reception of a read address within a predetermined range of addresses of one of said stored write addresses, the comparing means output being coupled to means for controlling an order of execution of stored read requests and stored write requests as a function of whether the comparing means output signal is asserted or is not asserted; and

means for decoding said read requests to determine a type of read request, said decoding means having an out coupled to said comparing means for determining a number of bits of said read address which are compared to the buffered write addresses, the number of bits being determined as a function of the type of read request.

14. A memory control unit as defined in claim 13 wherein said decoding means is responsive to read requests for determining if one of said read requests is associated with a first type of request which reads data from a location within said memory control unit, a second type of read request which reads an octal word of data from a memory unit, a third type of read request which reads a quad word from one of a memory unit, or a fourth type of read request which reads at least a double word from a memory unit.

15. A memory control unit as defined in claim 14 wherein said comparing means compares four bits when said decoding means determines that a read request is associated with said first type of read request.

16. A memory control unit as defined in claim 14 wherein said comparing means compares ten bits when said decoding means determines that a read request is associated with said second type of read request.

17. A memory control unit as defined in claim 14 wherein said comparing means compares eleven bits when said decoding means determines that a read request is associated with said third type of read request.

18. A memory control unit as define in claim 14 wherein said comparing means compares twelve bits when said decoding means determines that a read request is associated with said fourth type of read request.

19. A memory control unit for controlling a main system memory of a data processing system, the main system memory being comprised of at least one memory unit, comprising:

first interface means for coupling said memory control unit to the at least one memory unit of the main system memory;

second interface means for coupling said memory control unit to a system bus having signal lines for expressing information units, including memory read and write requests, the system bus including a system address bus;

means, coupled to said first and to said second interface means and responsive to a write request from said system bus, for executing the write request by storing one or more information units within a memory unit at an address specified by the system address bus, said write request executing means comprising write request receiving and buffer means having a plurality of storage locations capable of storing a plurality of received write requests and associated write addresses prior to execution of the write requests;

means, coupled to said first and to said second interface means and responsive to a read request from said system bus, for executing the read request by reading one or more information units from a memory unit at a location specified by the system address bus, said read request executing means comprising read request receiving and buffer means having a plurality of storage locations capable of storing a plurality of received read requests and associated read addresses prior to execution of the read requests;

said memory control unit further comprising:

means, having a first input coupled to said write buffer means and a second input coupled to said read request receiving means, for comparing a received read address to write addresses stored in said write address buffer means, said comparing means having an output signal for indicating, when asserted, an occurrence of the reception of a read address within a predetermined range of addresses of one of said stored write addresses, the comparing means output being coupled to means for controlling an order of execution of stored read requests and stored write requests as a function of whether the comparing means output signal is asserted or is not asserted; and

means, having an input coupled to said comparing means output signal and an output coupled to said system bus for asserting a signal on said system bus when said comparing means output signal is asserted, said signal preventing a reception of further read or write requests from said system bus.

20. A memory control unit for controlling a main system memory of a data processing system, the main system memory being comprised of at least one memory unit, comprising:

first interface means for coupling said memory control unit to the at least one memory unit of the main system memory;

second interface means for coupling said memory control unit to a system bus having signal lines for expressing information units, including memory read and write requests, the system bus including a system address bus;

means, coupled to said first and to said second interface means and responsive to a write request from said system bus, for executing the write request by storing one or more information units within a memory unit at an address specified by the system address bus, said write request executing means comprising write request receiving and buffer means having a plurality of storage locations capable of storing a plurality of received write requests and associated write addresses prior to execution of the write requests;

means, coupled to said first and to said second interface means and responsive to a read request from said system bus, for executing the read request by reading one or more information units from a memory unit at a location specified by the system address bus, said read request executing means comprising read request receiving and buffer means having a plurality of storage locations capable of storing a plurality of received read requests and associated read addresses prior to execution of the read requests;

means, having a first input coupled to said write buffer means and a second input coupled to said read request receiving means, for comparing a received read address to write addresses stored in said write address buffer means, said comparing means having an output signal for indicating, when asserted, an occurrence of the reception of a read address within a predetermined range of addresses of one of said stored write addresses, the comparing means output being coupled to means for controlling an order of execution of stored read requests and stored write requests as a function of whether the comparing means output signal is asserted or is not asserted; and

said memory control unit further comprising:

means for returning, in response to an execution of a read request, at least one information unit to said system bus;

means, having an input coupled to said read request executing means, for determining during a time that an information unit is returned to said system bus if one or more bits of the information unit read from a memory unit is in error, the determining

means further including means for correcting a single bit error in an information unit for providing to said returning means a corrected information unit to be subsequently returned to said system bus; and

means, having an input coupled to said determining means and an output coupled to said system bus, for asserting a first signal on said system bus when said determining means determines that an information unit has one bit in error.

21. A memory control unit as defined in claim 20 wherein said asserting means is operable for asserting a second signal on said system bus, said second signal

being asserted when said determining means determines that an information unit has more than one bit in error.

22. A memory control unit for controlling a main system memory of a data processing system, the main system memory being comprised of at least one memory unit, comprising:

first interface means for coupling said memory control unit to the at least one memory unit of the main system memory;

second interface means for coupling said memory control unit to a system bus having signal lines for expressing information units, including memory read and write requests, the system bus including a system address bus;

means, coupled to said first and to said second interface means and responsive to a write request from said system bus, for executing the write request by storing one or more information units within a memory unit at an address specified by the system address bus, said write request executing means comprising write request receiving and buffer means having a plurality of storage locations capable of storing a plurality of received write requests and associated write addresses prior to execution of the write requests;

means, coupled to said first and to said second interface means and responsive to a read request from said system bus, for executing the read request by reading one or more information units from a memory unit at a location specified by the system address bus, said read request executing means comprising read request receiving and buffer means having a plurality of storage locations capable of storing a plurality of received read requests and associated read addresses prior to execution of the read requests;

said memory control unit further comprising:

means responsive to the operation of said write request receiving and buffer means and to said read request executing means for determining, at least during a time that said read request executing means is executing a buffered read request, when a predetermined number of write requests are buffered within said write request buffer means, the predetermined number being less than a maximum possible number of buffered write requests;

means responsive to the operation of said determining means for causing said second interface means to assert a signal on said system bus when said determining means determines that the predetermined number of write requests are buffered within said write request buffer means, an assertion of said signal preventing a reception of further read or write requests from said system bus; and

means responsive to the operation of said determining means for executing at least one buffered write request such that the remaining number of buffered write requests is less than the predetermined number.

23. A memory control unit as set forth in claim 22 and further comprising means, having a first input coupled to said write buffer means and a second input coupled to said read request receiving means, for comparing a received read address to write addresses stored in said write address buffer means, said comparing means having an output signal for indicating, when asserted, an occurrence of the reception of a read address within a range of addresses of one of said stored write addresses, said memory control unit further comprising means for controlling the execution of read and write requests, said controlling means being coupled to said comparing means output signal and being responsive to said comparing means output signal not being asserted for causing an execution of all buffered read requests before any buffered write requests, said controlling means further being responsive to said comparing means output signal being asserted for causing an execution of only those buffered read requests which precede a buffered read request which caused the assertion of said comparing means output signal and then causing an execution of buffered write requests.

24. A memory control unit coupled between a system bus and a main system memory for controlling the operation of the main system memory, the system bus being comprised of address signal lines for specifying addresses within the main system memory, data signal lines for conveying data units between bus connections coupled to the system bus and the main system memory, and at least one signal line for specifying whether a particular system bus transaction initiated by one of the bus connections is a main system memory read request or a main system memory write request, the memory control unit comprising:

means coupled to the system bus for receiving main system memory read requests and main system memory write requests therefrom;

means coupled to the main system memory for executing main system memory read requests and main system memory write requests;

means coupled to the receiving means for buffering a plurality of main system memory write requests, including a main system memory write address associated with each main system memory write request, prior to execution of main system memory write requests;

means coupled to the receiving means for buffering a plurality of main system memory read requests, including a main system memory read address associated with each main system memory read request, prior to execution of main system memory read requests;

means having a first input coupled to the receiving means and a second input coupled to the means for buffering main system memory write requests for comparing a received main system memory read address against all buffered main system memory write addresses, if any, to determine if a received main system memory read address has an address value within a predetermined range of address values of one of the buffered main system memory write addresses, the comparing means including means for asserting an output signal for indicating that a received main system memory read address has an address value within the predetermined range of address values of one of the buffered main system memory write addresses; and wherein

the executing means has an input coupled to the comparing means output signal and is responsive to an assertion thereof for first executing in order as received all buffered main system memory read requests up to but not including the main system memory read request which was determined to be within the predetermined range of address values, then executing in order as received buffered main

system memory write requests, and then executing the buffered main system memory read request which was determined to be within the predetermined range of address values.

25. A memory control unit as set forth in claim 24 wherein the comparing means includes means for executing an associative comparison between each received system memory read address and all buffered system memory write addresses, if any, to determine if the received system memory read address has an address value within a predetermined range of address values of one of the buffered system memory write addresses, the associative comparison means having an output coupled to said asserting means.

26. A memory control unit as set forth in claim 24 and further comprising:

means coupled to the system memory write request buffering means for determining when a predetermined number of system memory write requests are buffered within the system memory write request buffering means, the predetermined number being less than a maximum capacity of the system memory write request buffering means;

means responsive to the operation of the predetermined number determining means for asserting a signal on the system bus when the predetermined number determining means determines that the predetermined number of system memory write requests are buffered, an assertion of the system bus signal preventing bus connections from issuing further system memory read or system memory write requests on the system bus; and wherein

the executing means is coupled to and is responsive to the operation of the predetermined number determining means for executing at least one buffered system memory write request such that the remaining number of buffered system memory write requests is less than the predetermined number.

* * * * *

No. 06-937

In the Supreme Court of the United States

QUANTA COMPUTER, INC., ET AL., PETITIONERS

v.

LG ELECTRONICS, INC.

ON WRIT OF CERTIORARI
TO THE UNITED STATES COURT OF APPEALS
FOR THE FEDERAL CIRCUIT

BRIEF FOR THE UNITED STATES AS AMICUS CURIAE SUPPORTING PETITIONERS

PAUL D. CLEMENT
Solicitor General
Counsel of Record
PETER D. KEISLER
THOMAS O. BARNETT
Assistant Attorneys General
THOMAS G. HUNGAR
Deputy Solicitor General
DEANNE E. MAYNARD
Assistant to the Solicitor General
CATHERINE G. O'SULLIVAN
SCOTT R. MCINTOSH
DAVID SEIDMAN
MARK R. FREEMAN
Attorneys
Department of Justice
Washington, D.C. 20530-0001
(202) 514-2217

JAMES A. TOUPIN
General Counsel
STEPHEN WALSH
Acting Solicitor
SHANNON M. HANSEN
HEATHER F. AUYANG
Associate Solicitors
United States Patent and Trademark Office
Alexandria, VA 22314

QUESTION PRESENTED

Whether a patentee, having authorized the sale of the particular article at issue, can nonetheless invoke patent law to remedy a violation of a purported restriction on the purchaser's right to use the article for its only reasonable use.

TABLE OF CONTENTS

Page

Interest of the United States 1
Statement 2
Summary of argument 5
Argument 7
I. Under this Court's cases, the patent-exhaustion doctrine delimits the exclusive rights granted by patent law 8
A. After an authorized sale of an article embodying the invention, a patentee cannot enforce restrictions on use or resale by means of patent law 8
B. Under this Court's cases, patentees can remedy violations of restrictions on licensees by means of patent-infringement suits against licensees and those who knowingly purchase in unauthorized sales 15
II. The Federal Circuit's understanding of patent exhaustion cannot be reconciled with this Court's cases 18
A. In the Federal Circuit, the patent-exhaustion doctrine is inapplicable to explicit post-sale restrictions 18
B. The Federal Circuit's approach is inconsistent with this Court's cases 20
C. Method patents should be subject to the same patent-exhaustion doctrine as other patents 25
III. The Court should reaffirm its long-standing interpretation of the patent-exhaustion doctrine ... 26

Table of Contents—Continued: Page

IV. The judgment should be vacated and the case remanded 30
Conclusion 32

TABLE OF AUTHORITIES

Cases:

Adams v. *Burke*, 84 U.S. (17 Wall.) 453 (1873) 8, 9, 21
Aro Mfg. Co. v. *Convertible Top Replacement Co.*, 377 U.S. 476 (1964) 8, 9
Bandag, Inc. v. *Al Bolser's Tire Stores, Inc.*, 750 F.2d 903 (Fed. Cir. 1984) 25, 26
B. Braun Med., Inc. v. *Abbott Labs.*, 124 F.3d 1419 (Fed. Cir. 1997) 18
Bloomer v. *McQuewan*, 55 U.S. (14 How.) 539 (1853) ..... *passim*
Boesch v. *Graff*, 133 U.S. 697 (1890) 9
Boston Store v. *American Graphophone Co.*, 246 U.S. 8 (1918) 20
Chaffee v. *Boston Belting Co.*, 63 U.S. (22 How.) 217 (1859) 21
Dawson Chem. Co. v. *Rohm & Haas Co.*, 448 U.S. 176 (1980) 25
Deepsouth Packing Co. v. *Laitram Corp.*, 406 U.S. 518 (1972) 13
Dr. Miles Med. Co. v. *John D. Park & Sons Co.*, 220 U.S. 373 (1911), overruled by *Leegin Creative Leather Prods., Inc.* v. *PSKS, Inc.*, 127 S. Ct. 2705 (2007) 14

Cases—Continued: Page

General Talking Pictures Corp. v. *Western Elec. Co.*, 305 U.S. 124 (1938) 16, 18

Glass Equip. Dev., Inc. v. *Bestin, Inc.*, 174 F.3d 1337 (Fed. Cir. 1999) 25

Harkness v. *Russell*, 118 U.S. 663 (1886) 21

Henry v. *A.B. Dick Co.*, 224 U.S. 1 (1912), overruled by *Motion Picture Patents Co.* v. *Universal Film Mfg. Co.*, 243 U.S. 502 (1917) 13

Hobbie v. *Jennison*, 149 U.S. 355 (1893) 8, 12, 21, 25

Keeler v. *Standard Folding Bed Co.*, 157 U.S. 659 (1895) ..... *passim*

Leegin Creative Leather Prods., Inc. v. *PSKS, Inc.*, 127 S. Ct. 2705 (2007) 11, 30

Leitch Mfg. Co. v. *Barber Co.*, 302 U.S. 458 (1938) 26

Mallinckrodt, Inc. v. *Medipart, Inc.*, 976 F.2d 700 (Fed. Cir. 1992) ..... *passim*

Merrill Lynch, Pierce, Fenner & Smith, Inc. v. *Dabit*, 547 U.S. 71 (2006) 12

Mitchell v. *Hawley*, 83 U.S. (16 Wall.) 544 (1873) 10, 13, 16, 17, 20, 21

Motion Picture Patents Co. v. *Universal Film Mfg. Co.*, 243 U.S. 502 (1917) ..... *passim*

Straus v. *Victor Talking Mach. Co.*, 243 U.S. 490 (1917) 10

United States v. *General Elec. Co.*, 272 U.S. 476 (1926) 9, 16, 26

Cases—Continued: Page

United States v. *Univis Lens Co.*, 316 U.S. 241 (1942) ..... *passim*
William W. Bierce, Ltd. v. *Hutchins*, 205 U.S. 340 (1907) 21

Constitution and statutes:

U.S. Const. Art. I, § 8, Cl. 8 28
35 U.S.C. 2(a)(1) 1
35 U.S.C. 2(b)(8) 1
35 U.S.C. 154(a) 8
35 U.S.C. 261 11
35 U.S.C. 271(a) 9
35 U.S.C. 271(c) 31

Miscellaneous:

FTC, *The Proper Balance of Competition and Patent Law and Policy* (Oct. 2003) <http://www.ftc.gov/os/2003/10/innovationrpt.pdf> 28
S. Rep. No. 1979, 82d Cong., 2d Sess. 23 (1952) 12

In the Supreme Court of the United States

No. 06-937

QUANTA COMPUTER, INC., ET AL., PETITIONERS

v.

LG ELECTRONICS, INC.

ON WRIT OF CERTIORARI
TO THE UNITED STATES COURT OF APPEALS
FOR THE FEDERAL CIRCUIT

BRIEF FOR THE UNITED STATES
AS AMICUS CURIAE SUPPORTING PETITIONERS

INTEREST OF THE UNITED STATES

This case presents the question whether a patentee, having authorized the sale of an article, can nonetheless invoke the patent laws to remedy a violation of a purported restriction on the purchaser's right to use the purchased article for its only reasonable use. The United States Patent and Trademark Office, which is responsible for issuing patents and advising the President on issues of patent policy, 35 U.S.C. 2(a)(1) and (b)(8), has a substantial interest in the resolution of that question. Moreover, because the scope of, and uncertainty over, patent rights may directly affect competition and innovation in the marketplace, this case implicates questions of core concern to the Antitrust Division of the United States Department of Justice. At the invi-

tation of the Court, the United States filed a brief as amicus curiae at the petition stage.

STATEMENT

1. Respondent owns several patents that relate to systems and methods for receiving and transmitting data in computer systems. Pet. App. 2a. Petitioners are manufacturers who build computer systems by combining computer parts with specialized microprocessors and chipsets purchased from Intel Corporation. *Id.* at 2a, 29a-30a. Intel is authorized by a cross-license agreement (License) with respondent to manufacture, and to sell to petitioners, those specialized components, which allegedly meet many of the limitations of respondent's patents. *Id.* at 2a-3a, 29a-30a, 33a-34a, 45a-46a, 55a.

The License authorizes Intel to "make, use, sell (directly or indirectly), offer to sell, import and otherwise dispose of all Intel Licensed Products." Pet. App. 33a (citation omitted).[1] The License expressly disclaims any express or implied license for acts of infringement that may occur when a third party—such as petitioners—combines Intel components with non-Intel components. Br. in Opp. 4-5 (citing License § 3.8). A contemporaneous Master Agreement that incorporates the License by reference also provides that respondent's "grant of a license to Intel for Integrated Circuits . . . shall not create any express or implied license under [respondent's] patents to computer system makers that combine Intel Integrated Circuits with other non-Intel components." *Id.* at 6 (quoting Master Agreement § 2). The

---

[1] Apart from the portions quoted in the opinions and by the parties, the provisions of the relevant agreements are confidential. See Br. in Opp. 4 n.1. The United States does not have access to those agreements.

License, however, also states: "Notwithstanding anything to the contrary in this Agreement, the parties agree that nothing herein shall in any way limit or alter the effect of patent exhaustion that would otherwise apply when a party hereto sells any of its Licensed Products." *Id.* at 5 (quoting License § 3.8) (emphases omitted).

The Master Agreement provides that Intel will send a notice to its customers stating that Intel has a "broad patent license" from respondent that "ensures that any Intel product that you purchase is licensed by [respondent] and thus does not infringe any patent held by [respondent]." Br. in Opp. 7 (quoting Attachment C). The notice further states: "*Please note however that while the patent license that [respondent] granted to Intel covers Intel's products, it does not extend, expressly or by implication, to any product that you may make by combining an Intel product with any non-Intel product.*" *Ibid.* Petitioners received that notice from Intel before purchasing some of the components at issue. See *ibid.*; Reply Br. 9.

2. Respondent sued petitioners for patent infringement. Pet. App. 30a. Respondent did "not contend that the Intel microprocessors and chipsets, alone, infringe any of the patents at issue." *Ibid.* Rather, it alleged that "the licensed Intel products meet many of the limitations of the patents and, when combined with other components in the accused devices, infringe five of its patents." *Ibid.*

Relying on *United States* v. *Univis Lens Co.*, 316 U.S. 241 (1942), the district court held that respondent's patent claims were barred by the patent-exhaustion doctrine. Pet. App. 26a-51a. Having "licensed to Intel the right to practice [its] patents and sell products embody-

ing its patents," respondent could not assert an infringement claim "against those who legitimately purchase and use the Intel microprocessor and chipset." *Id.* at 33a. The court emphasized that the components purchased by petitioners from Intel include elements of respondent's patents and have no reasonable use except in the practice of respondent's patents. *Id.* at 32a-49a; see *id.* at 55a.

In a subsequent order (Pet. App. 52a-61a), the court rejected respondent's argument that the patent-exhaustion doctrine did not apply because Intel "expressly informed [petitioners] that their purchase of components from Intel did not grant them a license to infringe [respondent's] patents." *Id.* at 58a. The district court reasoned that, notwithstanding the notice, petitioners' purchase was "unconditional, in that [petitioners'] purchase * * * was in no way conditioned on their agreement not to combine the Intel microprocessors and chipsets with other non-Intel parts and then sell the resultant products." *Ibid.*

The district court also held, however, that the *method* claims in respondent's patents were not subject to exhaustion. Pet. App. 60a. The court further held that petitioners did not acquire an implied license "because Intel expressly disclaimed the existence of such a license." *Id.* at 61a.

3. The court of appeals reversed the district court's judgment that respondent's system claims were exhausted. Pet. App. 1a-25a. The court reasoned that the patent-exhaustion doctrine is triggered only by an "unconditional" sale because, in such a transaction, the patentee "has bargained for, and received, an amount equal to the full value of the goods." *Id.* at 4a-5a (citation omitted). By contrast, in an "expressly conditional sale

or license," the court explained, "it is more reasonable to infer that the parties negotiated a price that reflects only the value of the 'use' rights conferred by the patentee." *Id.* at 5a (citation omitted).

Here, the court concluded that Intel's sales to petitioners were "conditional." Pet. App. 6a. The court pointed to the License, which "expressly disclaims granting a license allowing computer system manufacturers to combine Intel's licensed parts with other non-Intel components" and "required Intel to notify its customers of the limited scope of the license, which it did." *Ibid.* Thus, the court concluded that, "[a]lthough Intel was free to sell its microprocessors and chipsets, those sales were conditional, and Intel's customers were expressly prohibited from infringing [respondent's] combination patents." *Ibid.*

The court affirmed the district court's holding that respondent's method claims were not exhausted, on the ground that there was no unconditional sale. Pet. App. 6a. In the alternative, the court held that "the sale of a device does not exhaust a patentee's rights in its method claims." *Ibid.*

SUMMARY OF ARGUMENT

I. Since at least 1853, this Court has held that a patentee's (or authorized licensee's) sale of an article embodying the patentee's invention frees that particular article from any further patent-law restrictions on its use or resale. Restrictions on downstream use or resale may arise as a matter of state contract law, but not patent law; in acquiring valid title to the article, the purchaser also acquires the right to use and to sell it without fear of patent-infringement claims by the patentee. That understanding of the scope of the patent rights

afforded patentees under the patent law is known as the patent-exhaustion or first-sale doctrine, and is derived from the text and history of the patent statute, the purposes of patent law, and the adverse practical consequences of an alternative rule.

II. In recent years, the first-sale doctrine has evolved in the Federal Circuit in a manner that is at odds with this Court's precedents. Under the Federal Circuit's approach, the doctrine is merely a default rule that is overridden whenever a patentee chooses to impose explicit unilateral or bilateral restrictions on the rights of purchasers to use or to sell the patented article. Such restrictions (with certain limitations derived from antitrust or other law) are enforceable against all downstream users in a patent-infringement suit. That approach is irreconcilable with this Court's cases, which make clear that the patent-exhaustion doctrine applies despite explicit restrictions imposed by the patentee. *E.g.*, *United States* v. *Univis Lens Co.*, 316 U.S. 241 (1942).

The Federal Circuit's approach to the first-sale doctrine rests on the mistaken premises that (1) for patent-exhaustion purposes, a "conditional" sale includes an authorized sale where title passes but the patentee has purported to impose restrictions on use or resale by downstream purchasers, and (2) the patentee can enforce such restrictions through a patent-infringement suit without regard to the patent-exhaustion doctrine. Those premises are inconsistent with this Court's cases.

III. This Court should not follow the Federal Circuit's lead and transform a long-standing substantive limitation on patent rights into a default rule applicable only when the patentee fails to impose explicit restrictions on the rights acquired by purchasers in authorized

sales. The patent-exhaustion doctrine is grounded in sound doctrinal and policy reasons. The inconvenience and inefficiency of the Federal Circuit's approach could extend the entire length of a product's distribution chain, and could enable patentees to demand and obtain royalties beyond those that the statute was intended to provide. That approach also gives inadequate scope to the antitrust laws. With regard to post-sale limitations on the right to use or to sell, a patentee-seller should be placed in no better position with respect to the antitrust laws than any other seller.

IV. The judgment below rests on an erroneous understanding of the patent-exhaustion doctrine. Because the court of appeals did not determine whether Intel's authorized sales to petitioners resulted in exhaustion of the relevant patents under the appropriate standard, vacatur and remand are appropriate.

ARGUMENT

This Court first enunciated the doctrine of patent exhaustion, also known as the first-sale doctrine, more than 150 years ago as a limitation on the exclusive rights conferred under the patent laws. The doctrine bars the use of patent law (but not contract law) to enforce restrictions on a purchaser's use or resale of a patented article that was purchased from the patentee or from someone authorized by the patentee to sell the article. With but a single, short-lived exception, the Court has adhered to that understanding of the doctrine in all of its subsequent decisions. In recent years, however, the Federal Circuit has downgraded the rule to a default presumption, subject to override at the option of the patentee. The decision below rests on that understanding of patent exhaustion, which cannot be reconciled

with this Court's decisions. This Court should adhere to its precedents and reject the diluted version of the patent-exhaustion doctrine on which the decision below is premised.

I. UNDER THIS COURT'S CASES, THE PATENT-EXHAUSTION DOCTRINE DELIMITS THE EXCLUSIVE RIGHTS GRANTED BY PATENT LAW

A. After An Authorized Sale Of An Article Embodying The Invention, A Patentee Cannot Enforce Restrictions On Use Or Resale By Means Of Patent Law

The patent law grants to the patent-holder the "right to exclude others from making, using, offering for sale, or selling the invention." 35 U.S.C. 154(a). Since *Bloomer* v. *McQuewan*, 55 U.S. (14 How.) 539 (1853), this Court has repeatedly made clear that the exclusive rights to use or to sell are exhausted, as to a given article embodying the invention, upon the first valid sale of the article by the patentee or an authorized licensee. *Id.* at 549-550; see, *e.g.*, *Aro Mfg. Co.* v. *Convertible Top Replacement Co.*, 377 U.S. 476, 497 (1964) (plurality opinion); *Univis*, 316 U.S. at 251-252; *Motion Picture Patents Co.* v. *Universal Film Mfg. Co.*, 243 U.S. 502, 508-518 (1917); *Keeler* v. *Standard Folding Bed Co.*, 157 U.S. 659, 666 (1895); *Hobbie* v. *Jennison*, 149 U.S. 355, 361-363 (1893); *Adams* v. *Burke*, 84 U.S. (17 Wall.) 453, 456 (1873).

Under this Court's cases, a patentee who sells an article embodying the invention (either directly or through an authorized licensee) cannot bring a patent-infringement suit against the purchasers for using the article for its only reasonable use or for reselling the article to others. See, *e.g.*, *Univis*, 316 U.S. at 250-252; *Motion Picture Patents*, 243 U.S. at 515-518; *Keeler*, 157

U.S. at 666; *Adams*, 84 U.S. (17 Wall.) at 456; *McQuewan*, 55 U.S. (14 How.) at 549-550. Instead, the enforceability of downstream restrictions after an authorized sale arises only "as a question of contract, and not as one under the inherent meaning and effect of the patent laws." *Keeler*, 157 U.S. at 666; accord *Motion Picture Patents*, 243 U.S. at 509, 513; *McQuewan*, 55 U.S. (14 How.) at 549-550.

This Court's cases treat the first-sale doctrine as "delimiting the scope of the patent grant." *Aro*, 377 U.S. at 497 (plurality opinion). As the Court has explained, "when the machine passes to the hands of the purchaser," it "passes outside" the scope of the patentee's rights, "and is no longer under the protection of the act of Congress." *McQuewan*, 55 U.S. (14 How.) at 549. Accord, *e.g.*, *United States* v. *General Elec. Co.*, 272 U.S. 476, 489 (1926); *Adams*, 84 U.S. (17 Wall.) at 456. In effect, an authorized sale of a patented article grants an implied-in-law license under patent law to practice the patent. See 35 U.S.C. 271(a) (use "without authority" constitutes infringement). As *Adams* explained, this Court's first-sale cases rest on the principle that "the sale by a person who has the full right to make, sell, and use such a machine *carries with it* the right to the use of that machine to the full extent to which it can be used." 84 U.S. (17 Wall.) at 455 (emphasis added); *Univis*, 316 U.S. at 249 (observing that an authorized sale is "both a complete transfer of ownership * * * and a license to practice" the patented invention).[2]

---

[2] The Court has made clear, however, that a sale under a foreign patent in that foreign country does not exhaust the patent rights under the corresponding United States patent. See *Boesch* v. *Graff*, 133 U.S. 697 (1890).

The Court has drawn that limitation from the language of the statute: "all that [the patentee] obtains by the patent" is "the right to exclude every one from making, using, or vending the thing patented, without the permission of the patentee." *McQuewan*, 55 U.S. (14 How.) at 549; see, *e.g.*, *Motion Picture Patents*, 243 U.S. at 516. The Court has reasoned that once the patentee or authorized licensee validly parts with title to a machine embodying the patented invention, that sale, which could not lawfully be made without the patentee's authority, places that particular machine outside the exclusivity granted by the patent. After an authorized sale, a patentee is in a position no different from that of any inventor, with or without a patent, who lawfully passes title to a machine embodying his invention. *McQuewan*, 55 U.S. (14 How.) at 549. That is so, the Court has explained, because—unlike a licensee, who exercises a portion of the patentee's exclusive rights—one who purchases a patented article "for the purpose of using it in the ordinary pursuits of life * * * exercises no rights created by the act of Congress, nor does he derive title to [the machine] by virtue of the franchise or exclusive privilege granted to the patentee." *Ibid.* Once the patentee parts with title through an authorized sale, "[c]omplete title to the implement or machine purchased becomes vested in the vendee by the sale and purchase," *Mitchell* v. *Hawley*, 83 U.S. (16 Wall.) 544, 548 (1873), and the purchaser "becomes possessed of an absolute property in such articles, unrestricted in time or place," at least for patent-law purposes. *Keeler*, 157 U.S. at 666.

That long-standing construction of the patent statute is supported by the common law's historical hostility to servitudes on chattels. See *Straus* v. *Victor Talking Mach. Co.*, 243 U.S. 490, 500-501 (1917) (describing a

patentee's attempted downstream restrictions as "restraints upon [the property's] further alienation, such as have been hateful to the law from Lord Coke's day to ours, because obnoxious to the public interest"). Although patents have many of the attributes of personal property, 35 U.S.C. 261, and "the patentee may withhold his patent altogether from public use," the patent does not confer any right to sell the patented item burdened with ongoing restrictions of the patentee's choosing that are enforceable as a matter of patent law. *Motion Picture Patents*, 243 U.S. at 514, 516. That conclusion is supported by the same rationale underlying the common-law rule, namely, that public policy is best served by freedom of trade in chattels. *Keeler*, 157 U.S. at 667. Thus, whatever may be a patentee's right to enforce post-sale restrictions by way of contract law, the patentee (no more than any other property owner) has no property-like right to burden his invention with post-sale restrictions enforceable under *patent* law.[3]

This Court's cases also reflect that "the purpose of the patent law is fulfilled with respect to any particular

---

[3] This Court has concluded that the state of the historical common law regarding restraints on alienation is irrelevant in the antitrust context, because "the Sherman Act's use of 'restraint of trade' 'invokes the common law itself, . . . not merely the static content that the common law had assigned to the term in 1890.'" *Leegin Creative Leather Prods., Inc.* v. *PSKS, Inc.*, 127 S. Ct. 2705, 2714 (2007) (citation omitted). That principle has no application in the patent context, where there is no comparable grant of authority and the meaning of the property-like statutory rights granted by Congress is, like other statutory grants, properly informed by the common-law understanding at the time of the original enactments. That is particularly true in light of Congress's re-codification of the relevant statutory language here without substantive change and without rejecting the previous judicial construction of the statute. See pp. 12-13, *infra*.

article when the patentee has received his reward for the use of his invention by the sale of the article, and * * * once that purpose is realized the patent law affords no basis for restraining the use and enjoyment of the thing sold." *Univis*, 316 U.S. at 251. The "reward" to which a patentee is entitled for a "machine or instrument whose sole value is in its use" is the compensation for which he (or one acting with his authority) first parts with title. *Hobbie*, 149 U.S. at 362. That is so because once the patentee has parted with title to a machine embodying his invention, he has no further rights under the patent laws in that machine. As this Court has explained, "as between the owner of a patent on the one side, and a purchaser of an article made under the patent on the other, the payment of a royalty once, or, what is the same thing, the purchase of the article from one authorized by the patentee to sell it, emancipates such article from any further subjection to the patent throughout the entire life of the patent." *Keeler*, 157 U.S. at 666.

Congress's re-enactment of the patent laws in 1952 supports this Court's construction of the statute. Acting against the backdrop of almost 100 years of this Court's precedents applying the first-sale doctrine to patent law, Congress made no effort to alter that construction. As this Court has recognized, "when 'judicial interpretations have settled the meaning of an existing statutory provision, repetition of the same language in a new statute indicates, as a general matter, the intent to incorporate its . . . judicial interpretations as well.'" *Merrill Lynch, Pierce, Fenner & Smith, Inc.* v. *Dabit*, 547 U.S. 71, 85 (2006) (citation omitted). That presumption is applicable here, where the only change that Congress made in the 1952 amendments to the grant of exclusive

rights was to change the text to "'the right to exclude others from making, using, or selling', following language used by the Supreme Court, to render the meaning clearer." S. Rep. No. 1979, 82d Cong., 2d Sess. 23 (1952); see *Deepsouth Packing Co.* v. *Laitram Corp.*, 406 U.S. 518, 531 (1972) ("We would require a clear and certain signal from Congress before approving the position of a litigant who * * * argues that the beachhead of privilege is wider, and the area of public use narrower, than courts had previously thought.").

The lone exception to this Court's treatment of the first-sale doctrine as delimiting the scope of the patent right was the short-lived decision in *Henry* v. *A.B. Dick Co.*, 224 U.S. 1 (1912), which was expressly overruled just five years later by *Motion Picture Patents*, 243 U.S. at 518. In allowing a patentee to remedy through the patent laws a violation of the requirement that pur-chasers could use its patented invention only with supplies purchased from the patentee, *A.B. Dick* read this Court's first-sale cases as recognizing only a license implied in *fact* to use the purchased article. 224 U.S. at 24. In so concluding, the *A.B. Dick* Court misread *Mitchell* as involving a conditional sale, see *id.* at 23, when, in fact, *Mitchell* involved an unauthorized sale, see 83 U.S. (16 Wall.) at 548-549. See pp. 16-17, *infra*.[4]

---

[4] Respondent claims (Supp. Br. 7 n.4) that *A.B. Dick* retains force, but *Motion Picture Patents* expressly rejected the legal principle on which *A.B. Dick*'s holding rested, namely, "that, since the patentee may withold his patent altogether from public use he must logically and necessarily be permitted to impose any conditions which he chooses upon any use which he may allow of it." *Motion Picture Patents*, 243 U.S. at 514. The Court described that principle as "defect[ive]," *ibid.*, plainly rejected it, and accordingly concluded that it was "obvious" that "the decision in [*A.B. Dick*] must be regarded as overruled." *Id.* at 518.

The Court's decision in *Univis* confirms that the patent-exhaustion doctrine delimits the scope of the patent right, which cannot be extended or altered by the parties. In *Univis*, the Court rejected, as a defense to a Sherman Act claim, the argument that the patent statute authorized a maker of eyeglass lens blanks to impose resale-price restrictions on finished lenses made with the blanks.[5] The Court reasoned that the sale of the lens blanks by the patentee's authorized licensee "exhausts the monopoly in that article and the patentee may not thereafter, by virtue of his patent, control the use or disposition of the article." 316 U.S. at 250. Although the lens blanks did not themselves meet all the limitations of any of the patents until after the sale, when the downstream retailers processed them into finished lenses, the Court held that the first-sale doctrine still applied because the lens blanks were capable of use only in practicing the patents. *Id.* at 248-249; see *id.* at 249 (assuming that "each blank * * * embodies essential features of the patented device and is without utility until it is ground and polished as the finished lens of the patent").

In so holding, the Court reiterated the principle of its earlier cases, observing that "[t]he first vending of any article manufactured under a patent puts the article beyond the reach of the monopoly which that patent confers." *Univis*, 316 U.S. at 252. The Court also reasoned that "[a]n incident to the purchase of any article,

---

[5] The Court's analysis of the failure of the patent-law defense survives the demise of the per se ban on resale-price maintenance. See *Leegin*, *supra*, overruling *Dr. Miles Med. Co.* v. *John D. Park & Sons Co.*, 220 U.S. 373 (1911). Indeed, properly understood, the first-sale doctrine continues to limit the scope of the patent defense and thereby allow courts to apply rule-of-reason analysis to resale-price-maintenance agreements involving patented goods.

whether patented or unpatented, is the right to use and sell it." *Id.* at 249. Thus, "[s]ale of a lens blank by the patentee or by his licensee is * * * in itself both a complete transfer of ownership of the blank, which is within the protection of the patent law, and a license to practice the final stage of the patent procedure." *Ibid.* The "license" to which the Court referred necessarily arose as a matter of law by virtue of the sale, and was not subject to alteration by the patentee, because it overrode the patentee's imposition of explicit restrictions purporting to limit the downstream finishers' right to sell the finished product. See *id.* at 243-246. If the implied license conferred by an authorized sale were merely a default rule that could be overridden by contrary statements of the patentee or agreement of the parties, the Court could not have found exhaustion in *Univis*.[6]

B. Under This Court's Cases, Patentees Can Remedy Violations Of Restrictions On Licensees By Means Of Patent-Infringement Suits Against Licensees And Those Who Knowingly Purchase In Unauthorized Sales

In contrast to the Court's consistent rejection of attempts by patentees to place patent-law limitations on use or resale by purchasers following authorized sales, this Court has repeatedly held that a patentee may require licensees to comply with any lawful restriction to which the parties may agree—including field-of-use re-

[6] This Court has never suggested that the patent-exhaustion doctrine applies to the *products* of a patented item that is capable of reproducing itself in the hands of the purchaser—*e.g.*, newly-grown seeds that are identical to, and grown from, a patented genetically-modified seed that was purchased from the patentee or an authorized licensee. See U.S. Amicus Br. at 14 & n.8, *McFarling* v. *Monsanto Co.*, 545 U.S. 1139 (2005) (No. 04-31). This case presents no opportunity to address that question.

strictions and even minimum-price restrictions—on pain of liability for patent infringement for both the licensee and purchasers with knowledge of the restriction. See, *e.g.*, *General Talking Pictures Corp.* v. *Western Elec. Co.*, 305 U.S. 124, 127 (1938); *General Elec.*, 272 U.S. at 489-490; *Mitchell*, 83 U.S. (16 Wall.) at 547-551. The Court has explained that licensees "stand[] on different ground" from purchasers in authorized sales, because a licensee holds a portion of the patentee's exclusive rights under the patent statute, whereas an article validly sold to a purchaser is "no longer within the limits of the monopoly." *McQuewan*, 55 U.S. (14 How.) at 549-550; see *Mitchell*, 83 U.S. (16 Wall.) at 548. Because the licensee stands in the shoes of the patentee, this Court generally has allowed the patentee to restrict its licensees as if the patentee itself were exercising the exclusive patent rights, as long as the restrictions "are normally and reasonably adapted to secure pecuniary reward for the patentee's monopoly." *General Elec.*, 272 U.S. at 490.

Among the license restrictions that, when breached, will give rise to a valid patent-infringement suit is a restriction on a licensee's ability to make an authorized sale. An early example is *Mitchell*, where the patentholders had conveyed to the licensee the right "*to license to others the right to use the [patented] machines*," 83 U.S. (16 Wall.) at 548 (quoting license), but had not conveyed to the licensee the right to sell the machines, and the license expressly forbade the licensee to "'*in any way, or form, dispose of, sell, or grant* any license to use the said machines beyond the expiration' of the original term." *Id.* at 549 (quoting license). Despite that license restriction, the licensee "sold" the machines to the defendants rather than merely licensing

their use. *Ibid.* When Congress extended the original patent term, the patent-holders brought a patent-infringement suit to enjoin the defendants' ongoing use of the machines. Notwithstanding the sale, *ibid.*, the Court held that the first-sale doctrine did not apply, because the seller "was only a licensee and *never had any power to sell a machine* so as to withdraw it indefinitely from the operation of the franchise secured by the patent," *id.* at 551 (emphasis added), making the sale unauthorized.[7]

More recently, in *General Talking Pictures*, the Court held that when a licensee sells a patented article in violation of the field-of-use terms of its license, "the effect is precisely the same as if no license whatsoever had been granted," and the patentee could sue both the licensee and the purchaser (who was on notice of the restriction) for infringement of the patent. 305 U.S. at 127. In *Univis*, by contrast, where the sale of the lens blanks was authorized (albeit expressly subject to limitations on resale), the patent-exhaustion doctrine applied, because "the authorized sale of an article which is capable of use only in practicing the patent is a relin-

---

[7] Although, as respondent notes (Supp. Br. 6 & n.3), the Court in *Mitchell* referred to the fact that the licensee "sold" the machines, the Court never suggested that the licensee sold the machines within the scope of the authority granted him by the patent-holders. To the contrary, the Court's opinion emphasizes that the licensee did *not* have the authority to sell the machines, and the record in the case supports that conclusion. See Tr. of R. at 5-6, *Mitchell* v. *Hawley*, *supra* (No. 411) (Patentees "do hereby convey to the [licensee], the exclusive right to make and use, and to license to others the right to use, the said machines in the said States of Massachusetts and New Hampshire * * * during the remainder of the original term of said letters-patent. Provided that the [licensee] shall not in any way or form dispose of, sell, or grant any license to use the said machines, beyond the 3rd day of May, A. D. 1867.").

quishment of the patent monopoly with respect to the article sold." 316 U.S. at 249. The distinction between the rights of licensees and of authorized purchasers is thus a necessary and explicable result of the differences in their respective positions.

II. THE FEDERAL CIRCUIT'S UNDERSTANDING OF PATENT EXHAUSTION CANNOT BE RECONCILED WITH THIS COURT'S CASES

In recent years, the first-sale doctrine has evolved in the Federal Circuit in a manner that is materially different from the doctrine expounded by this Court. That evolution has downgraded this Court's substantive limitation on a patent owner's exclusive rights into a mere default rule that the patentee can override by placing "conditions" on the sale of his patented invention. That result is irreconcilable with the reasoning of this Court's patent-exhaustion cases.

A. In The Federal Circuit, The Patent-Exhaustion Doctrine Is Inapplicable To Explicit Post-Sale Restrictions

As the patent-exhaustion doctrine has evolved in the Federal Circuit, the doctrine "does not apply to an expressly conditional sale"—that is, to a sale that is subject to an express restriction on the right to use or to resell the patented invention. Pet. App. 5a (quoting *B. Braun Med., Inc.* v. *Abbott Labs.*, 124 F.3d 1419, 1426 (Fed. Cir. 1997)). The foundation of the Federal Circuit's approach to the first-sale doctrine is *Mallinckrodt, Inc.* v. *Medipart, Inc.*, 976 F.2d 700 (Fed. Cir. 1992). In *Mallinckrodt*, the patentee manufactured and sold to hospitals a medical device capable of reuse but marked with a "single use only" notice. *Id.* at 701. Many hospital-purchasers sent the used products to Medipart for reconditioning. *Ibid.* Under the reasoning of this

Court's first-sale cases, such a restriction on reuse, like an express restriction on resale, would be ineffective in an infringement action. The Federal Circuit, however, held that an otherwise valid "single use only" notice is enforceable in an action for patent infringement. *Id.* at 703-709.

The court of appeals construed this Court's patent-exhaustion cases as establishing only that "price-fixing and tying restrictions accompanying the sale of patented goods were *per se* illegal." *Mallinckrodt*, 976 F.2d at 704. In the court's view, this Court's cases "did not hold, and it did not follow, that all restrictions accompanying the sale of patented goods were deemed illegal." *Ibid.*; see *id.* at 708. Pointing to this Court's decision in *General Talking Pictures*, the court of appeals concluded that there was no persuasive basis for holding that "the enforceability of a restriction to a particular use is determined by whether the purchaser acquired the device from a manufacturing licensee or from a manufacturing patentee." *Id.* at 705.

The Federal Circuit thus rejects application of the first-sale doctrine to what it views as "conditional" sales, a category that evidently encompasses any sales subject to unilateral or bilateral restrictions on the use or resale of the purchased article. Pet. App. 4a-6a; *Mallinckrodt*, 976 F.2d at 706-708. As a result, a patentee may attach (by notice or agreement) restrictions on products embodying its patented invention and enforce those restrictions, in actions for patent infringement, against downstream purchasers even after an authorized sale by the patentee or a licensee. Pet. App. 6a. In the Federal Circuit's view, such restrictions are enforceable in patent-infringement suits unless the restriction is not "within the patent grant" (*i.e.*, does not "relate[] to subject mat-

ter within the scope of the patent claims"), has "anticompetitive effects extending beyond the patentee's statutory right to exclude," and violates antitrust law. *Mallinckrodt*, 976 F.2d at 708.

B. The Federal Circuit's Approach Is Inconsistent With This Court's Cases

The precedents of this Court foreclose the Federal Circuit's view that patent exhaustion is merely a default rule to be discarded whenever patentees choose to impose explicit restrictions on authorized purchasers' use or resale. Instead, this Court's cases make clear that the patent-exhaustion doctrine delimits the substantive scope of the patent grant. See pp. 8-15, *supra*. Indeed, this Court has repeatedly applied the patent-exhaustion doctrine in concluding that explicit restrictions imposed on authorized purchasers are ineffective as a matter of patent law. See, *e.g.*, *Univis*, 316 U.S. at 244, 249-252; *Boston Store* v. *American Graphophone Co.*, 246 U.S. 8, 25 (1918); *Motion Picture Patents*, 243 U.S. at 506-507, 516. The reasoning of those cases is irreconcilable with the Federal Circuit's treatment of patent exhaustion.

The court of appeals rests its contrary approach on a broad understanding of "conditional" sale, but that understanding is not reflected in this Court's cases. In *Mitchell*, the Court did allude to the notion of an unconditional sale, observing that the patent right is exhausted when the patentee "has himself constructed a machine and sold it without any conditions, or authorized another to construct, sell, and deliver it * * * without any conditions." 83 U.S. (16 Wall.) at 547; see *Keeler*, 157 U.S. at 663 (quoting the foregoing in describing *Mitchell*). But at that time, a "conditional" sale would have been understood as an agreement to sell

where title would not convey until performance of a condition precedent. See, *e.g.*, *Harkness* v. *Russell*, 118 U.S. 663, 666 (1886) (describing a "conditional sale" as a "mere agreement to sell upon a condition to be performed" in which title does not pass until the condition precedent is performed).[8]

That narrower understanding of "conditional" is consistent with this Court's other patent-exhaustion cases, which explain that the doctrine is triggered "if a person legally acquires a title to" a patented item (*Chaffee* v. *Boston Belting Co.*, 63 U.S. (22 How.) 217, 223 (1859)); when a patented item is "lawfully made and sold" (*Hobbie*, 149 U.S. at 363; *Adams*, 84 U.S. (17 Wall.) at 457) or "passes to the hands of the purchaser" (*McQuewan*, 55 U.S. (14 How.) at 549); or upon "the purchase of the article from one authorized by the patentee to sell it" (*Keeler*, 157 U.S. at 666). See *Motion Picture Patents*, 243 U.S. at 515-516 (describing as an "unconditional sale" a sale made subject to restrictions on resale price). Thus, under this Court's cases, if a purchaser acquires title to an item embodying the patented invention through a sale authorized by the patentee, the patent is exhausted—regardless of the patentee's purported imposition of an explicit restriction on use or resale.

---

[8] Respondent suggests (Supp. Br. 6 & n.3) that *Mitchell* involved "conditione*d*" sales, and that that concept is somehow different from "conditional." The Court in *Mitchell*, however, used neither of those terms, speaking instead of sales "without conditions." See 83 U.S. (16 Wall.) at 548. Courts in that era used the terms "conditional" and "condition" in relation to sales interchangeably. See, *e.g.*, *William W. Bierce, Ltd.* v. *Hutchins*, 205 U.S. 340, 345-347 (1907) (noting that sale of property purported to make "the passing of title * * * subject to a condition precedent," and deciding that "the sale was conditional"); *Harkness*, 118 U.S. at 666.

This Court's decision in *Univis* confirms that understanding, because the Court relied on the first-sale doctrine in concluding that explicit post-sale restrictions were not within the scope of the patent grant. The Federal Circuit misreads *Univis* as standing only for the proposition that restrictions that have been found to be unlawful restraints on trade in the patent context, such as "price-fixing or tying" arrangements, cannot be enforced in a patent-infringement suit. See *Mallinckrodt*, 976 F.2d at 708; Resp. Supp. Br. 5-8. But that reading gives too little weight to the critical first step of the Court's analysis in *Univis*. The lawsuit in *Univis* was an action under the Sherman Act. But before considering whether the defendants' conduct violated antitrust law, the Court first asked whether that conduct was "excluded by the patent monopoly from the operation of the Sherman Act." 316 U.S. at 243. And to answer that question (*i.e.*, to determine whether the defendants' conduct was within the scope of the patent grant, and thus immune from antitrust scrutiny), the Court looked to the patent-exhaustion doctrine. Only after concluding that the authorized sales had exhausted the patentee's rights under the patent law did the Court analyze the antitrust claims. See *id.* at 251 (because of the first-sale doctrine, the "stipulation by the patentee fixing resale prices derive[d] no support from the patent" and was placed "on the same footing under the Sherman Act as like stipulations with respect to unpatented commodities"). Although the antitrust claim was the catalyst for the Court's analysis of the patent-exhaustion doctrine in *Univis*, the Court's resulting substantive patent-law holding has force as a definitive construction of the patent law even in infringement actions that are unrelated to any antitrust claims.

The test adopted by the Federal Circuit in *Mallinckrodt* thus reflects a fundamental misunderstanding of the role and scope of the patent-exhaustion doctrine. According to *Mallinckrodt*, the first step in determining the validity of an explicit use or resale restriction is to determine whether it is "within the patent grant," and if it is, "that ends the inquiry." 976 F.2d at 708. But the Federal Circuit bars consideration of patent-exhaustion principles in making that initial determination, whereas *Univis* and other decisions of this Court make clear that the first-sale doctrine delimits the scope of the patentee's patent-law rights and therefore *must* be considered in determining whether a particular post-sale restriction is "within the patent grant." The court of appeals' approach cannot be reconciled with those precedents.

This Court's reasoning in *Univis* also refutes the Federal Circuit's reliance on *General Talking Pictures*. See *Mallinckrodt*, 976 F.2d at 705. In *Univis*, this Court refused to reconsider the very distinction that the Federal Circuit has jettisoned, namely, the distinction between restrictions placed on licensees (which are effective under the patent laws against knowing purchasers after unauthorized sales) and restrictions placed on purchasers after an authorized sale (which are not). See 316 U.S. at 252 (distinguishing *General Electric* and noting that the Court there "was at pains to point out that a patentee who manufactures the product protected by the patent and fails to retain his ownership in it can not control the price at which it is sold by his distributors"). As explained below, there are substantial reasons to retain this Court's latter rule, and no need to address in this case whether the former should be reconsidered. There are limits on what can be accomplished

through a valid license and so there is no reason that the treatment of licensees and purchasers needs to be co-extensive.

Finally, the Federal Circuit's view (evidenced most clearly by the decision below) that patentee-imposed use restrictions are generally enforceable against authorized purchasers as a matter of patent law cannot be reconciled with this Court's frequent suggestion that whether a patentee can place enforceable downstream restrictions following an authorized sale turns on contract, not patent, law. See, *e.g.*, *Keeler*, 157 U.S. at 666; *McQuewan*, 55 U.S. (14 How.) at 549-550. The Federal Circuit glosses over that distinction, observing that "[t]he question whether a license restriction is binding on the purchaser is indeed one of contract law," but that "the remedy for breach of a binding license provision is not exclusively in contract," but also through suits for patent infringement. *Mallinckrodt*, 976 F.2d at 707 n.6. If that were so, this Court's observations to the contrary in cases rejecting claims under the patent law would make little sense. See *Motion Picture Patents*, 243 U.S. at 509; *Keeler*, 157 U.S. at 666; *McQuewan*, 55 U.S. (14 How.) at 549-550. Thus, although the Federal Circuit has correctly recognized that not "all restrictions accompanying the sale of patented goods [a]re deemed illegal," *Mallinckrodt*, 976 F.2d at 704, the court errs in concluding that any downstream restriction that does not "violate[] some other law or policy" therefore can be enforced under the *patent* law. *Id.* at 708.[9]

---

[9] Respondent suggests (Supp. Br. 8 & n.5) that *Keeler*'s reference to the patentee's potential ability to protect himself by "special contracts," 157 U.S. at 666, does not preclude enforcement of such contracts by means of patent law. But that strained reading of *Keeler* was rejected by the Court in *Motion Picture Patents*, which confirmed that "[t]he

C. Method Patents Should Be Subject To The Same Patent-Exhaustion Doctrine As Other Patents

The court below held (Pet. App. 6a) that method patents are categorically exempt from the operation of the first-sale doctrine. Scant rationale, however, has been offered for that conclusion. See *Bandag, Inc.* v. *Al Bolser's Tire Stores, Inc.*, 750 F.2d 903, 924 (Fed. Cir. 1984) (concluding that patent-exhaustion doctrine was inapplicable "because the claims of the Carver patent are directed to a 'method of retreading' and cannot read on the equipment Bolser used in its cold process recapping"); *Glass Equip. Dev., Inc.* v. *Besten, Inc.*, 174 F.3d 1337, 1341 n.1 (Fed. Cir. 1999) (stating conclusion).

Although this Court has never directly addressed the question, some of its patent-exhaustion cases have involved method patents, and the Court has never suggested that such patents are categorically exempt from the exhaustion doctrine. See, *e.g.*, *Dawson Chem. Co.* v. *Rohm & Haas Co.*, 448 U.S. 176, 186 (1980) (accepting concession that the patentee's sale of a chemical specially suited for use in a patented method exhausts the

---

extent to which the use of the patented machine may validly be restricted to specific supplies *or otherwise by special contract* between the owner of a patent and the purchaser" is "a question *outside the patent law*." 243 U.S. at 509 (emphases added) (citing *Keeler*). Accord *McQuewan*, 55 U.S. at 549-550 (after an authorized sale, the patented article "is no longer under the protection of the act of Congress," and "[c]ontracts in relation to it are regulated by the laws of the State, and are subject to State jurisdiction"). Respondent also asserts that *Hobbie* supports a contrary view, because it states that "[i]t is easy for a patentee to protect himself" by "tak[ing] care to bind every licensee or assignee, if he gives him the right to sell articles made under the patent, by imposing conditions." 149 U.S. at 363. But that statement merely confirms that the Court treats restrictions on licensees differently from purported restrictions on authorized purchasers.

patentee's method patent, and citing *Univis* and *Adams*); *General Elec.*, 272 U.S. at 480, 490 (finding no exhaustion); see also *Leitch Mfg. Co.* v. *Barber Co.*, 302 U.S. 458, 461 (1938) (noting, where patentee sells unpatented bituminous emulsion to road builders for use in practicing patented but unlicensed method, that "whenever such a sale is made, the law implies authority to practice the invention"). Indeed, if method patents were never subject to exhaustion upon an authorized sale of an article whose only reasonable use is to practice the patented method, it would be easy in many circumstances to avoid the patent-exhaustion doctrine simply by applying for a method patent in conjunction with a machine, manufacture, or composition patent. Cf. *Bandag*, 750 F.2d at 922 (noting that it "is commonplace that the claims defining some inventions can by competent draftsmanship be directed to either a method or an apparatus"). There is no evident reason why the patent-exhaustion doctrine should be deemed inapplicable to method patents.

III. THE COURT SHOULD REAFFIRM ITS LONG-STANDING INTERPRETATION OF THE PATENT-EXHAUSTION DOCTRINE

Not only is the Federal Circuit's patent-exhaustion doctrine irreconcilable with the reasoning of this Court's cases, there is no valid reason for this Court to follow the Federal Circuit's lead in diluting that long-established doctrine, and much reason not to do so.

This Court's patent-exhaustion decisions long ago provided sound doctrinal bases for the doctrine, see pp. 8-15, *supra*, resting on the language and purpose of the patent laws, and those bases remain sound. Indeed, the doctrinal foundation of the rule has only been strength-

ened by Congress's re-enactment of the patent laws. See pp. 12-13, *supra*. The Court has said less about the practical policy reasons for the doctrine, viewing "[t]he inconvenience and annoyance to the public" if the law were otherwise "too obvious to require illustration." *Keeler*, 157 U.S. at 667.

This case provides an illustration. Absent patent exhaustion, the lawful purchase of an article useful only for practicing the patent provides no value to the purchaser until completion of further negotiations and a further payment for the right to use or to resell. Moreover, the need for further negotiations and payments may depend on a court's after-the-fact determination whether the seller adequately expressed a limitation on the rights conveyed. Compare Pet. App. 59a (district court holding that notice required by respondent was "not sufficient to transform" sale by Intel "into a conditional one"), with *id.* at 6a (Federal Circuit holding that the sales to petitioners were conditional, without exploring which of them received notice or when). The potential for "inconvenience and annoyance," as well as inefficiency, is palpable.

That potential is not limited to the first purchaser. If the patentee can impose use and resale restrictions on the first purchaser in an authorized sale, there is no reason why it cannot also do so as to all subsequent purchasers. Here, for example, respondent (having already received a royalty from Intel) could also extract royalties not only from petitioners, but also from customers who purchase computers from petitioners for resale, on pain of infringement liability. The inconvenience, annoyance, and inefficiency can thus be passed down the

chain of distribution, with no obvious stopping point short of the end of the article's useful life.[10]

That ability to employ the patent law to extract royalties at multiple downstream points in the channels of commerce, even after an authorized sale, can have consequences beyond the evident transactional inefficiencies. As amici have observed, a patentee's negotiating leverage downstream is not necessarily reduced by the amount of the royalties it obtained from upstream licensees. Dell Br. 9-11; see generally FTC, *To Promote Innovation: The Proper Balance of Competition and Patent Law and Policy* Ch. 2, at 29 (Oct. 2003) <http://www.ftc.gov/os/2003/10/innovationrpt.pdf> ("If a[] * * * producer learns that it has infringed a patent only after it has committed sunk costs to its * * * production—and thus locked in to the effort—the patentee may be in a position to demand supra-competitive royalty rates."). The result would be a transfer of wealth from downstream firms and ultimate consumers to the patentee. Nothing suggests that this transfer would further "the Progress of Science and useful Arts," U.S. Const. Art. I, § 8, Cl. 8, to the benefit of the public. At least since the decision in *Keeler*, this Court has adhered to the view that the right to place such downstream restrictions should be resolved as a matter of

---

[10] Although suits by a patentee against ultimate retail consumers might be unlikely as a practical matter, suits by patentees against their competitors, or others, for direct or contributory infringement would not be. See, *e.g.*, *Motion Picture Patents*, 243 U.S. at 507-508 (patentee sued, *inter alia*, a movie manufacturing company and a movie supplier for making and supplying films for use on patented film projector in violation of post-sale restrictions); *Mallinckrodt*, 976 F.2d at 701 (patentee sued company that was refurbishing patented medical device for patentee's customers, who were violating patentee's "single use" restriction).

contract, not patent, law. See 157 U.S. at 666-667; *Motion Picture Patents*, 243 U.S. at 509, 513, 515.

The Federal Circuit's approach also has the potential to erode downstream competition by permitting patentees to avoid antitrust scrutiny of restrictions on the use and resale of products embodying their inventions—restrictions that would be within the scope of the patent grant (and thus, in the Federal Circuit's view, immune from antitrust scrutiny). *Mallinckrodt* concedes that some post-sale restrictions may be invalid because they violate the antitrust laws—but limits that concession to restrictions not "reasonably within the patent grant," *i.e.*, restrictions unrelated "to subject matter within the scope of the patent claims." 976 F.2d at 708. The ambiguity of that criterion (and the court's rejection of the first-sale doctrine as an enforceable limitation on the scope of the patent grant) may permit potentially anticompetitive post-sale restrictions on reuse, repair, or servicing to escape antitrust scrutiny. Moreover, the court's analysis appears to get matters backwards (restrictions are not outside the patent grant because they violate the antitrust laws, rather restrictions that might otherwise violate the antitrust laws may be immunized if they are within the patent grant), and at a minimum is ambiguous and confusing.

Some of the same restrictions that the first-sale doctrine renders ineffective in a patent-infringement suit could be validly imposed as a matter of state contract law. But even otherwise valid contract provisions would not provide a defense to a federal antitrust action, and mere unilateral notice to downstream purchasers will not generally give rise to enforceable contractual restrictions. Moreover, manufacturers may not be in privity of contract with potential competitors that would

provide substantially more attractive targets for lawsuits than the manufacturer's own direct customers. Cf. n.10, *supra*. Patent law should not be read to grant more extensive rights.

Finally, "there is an argument for [retaining the Court's long-standing patent-exhaustion doctrine] on the basis of *stare decisis* alone." *Leegin Creative Leather Prods., Inc.* v. *PSKS, Inc.*, 127 S. Ct. 2705, 2720 (2007). That argument is particularly powerful here. In *Leegin*, the Court departed from the rule of *stare decisis* because of compelling considerations unique to the antitrust precedent it overruled and to the special status of the Sherman Act in the courts. *Id.* at 2720-2725. In contrast, the record here reveals no considerations favoring a departure from *stare decisis*—and the government is aware of none. Indeed, respondent has not argued to date that this Court should depart from its settled doctrine, but rather has insisted (albeit incorrectly) that the Federal Circuit has accurately construed that doctrine.

IV. THE JUDGMENT SHOULD BE VACATED AND THE CASE REMANDED

The judgment below rests on the same erroneous understanding of patent exhaustion that infuses the Federal Circuit's approach to this area of the law. Although the court recognized that "Intel was free to sell its microprocessors and chipsets" to petitioners (Pet. App. 6a), the court nevertheless held that respondent could impose, and enforce by way of a patent-infringement suit, restrictions on the rights of purchasers to whom title passed. That holding is incorrect.

The court of appeals did not address whether, absent what it found to be enforceable "conditions" on the sale,

Intel's authorized sale of the components would exhaust the patents at issue. The sale here was not of an article covered by those patents, see Pet. App. 3a, but rather merely of a component of the patented systems and methods. See Br. in Opp. 3-4. Although *Univis* held that an authorized sale of an article exhausts relevant patents if the article "embodies essential features" of the patented invention and "is capable of use only in practicing the patent," 316 U.S. at 248-249,[11] that case did not precisely delineate the required relationship between the purchased article and the patented invention. Under the logic of *Univis*, if the article sold by or with authorization from the patentee is especially made or adapted for infringing the patentee's patent(s), constitutes a material part of the invention, and has no substantial noninfringing use—in short, if the unauthorized sale of the article would constitute contributory infringement, as the Court assumed was true in *Univis*, *id.* at 249—an authorized sale should exhaust the patentee's ability to assert infringement of such patent(s) against the purchaser. Cf. 35 U.S.C. 271(c). Here, the district court held that respondent's system patents were exhausted, based on its conclusion that Intel's chips and microprocessors were "'destined . . . to be finished by the purchaser in conformity'" to respondent's system patents, and have "no reasonable non-infringing use." Pet. App. 55a. The court of appeals, however, did not address that question, so a remand for consideration of that issue would be appropriate.

---

[11] The Court also spoke of the relationship as one in which the patentee "has destined the article to be finished by the purchaser in conformity to the patent," *Univis*, 316 U.S. at 251, or has sold it "for the purpose of enabling the buyer to finish and sell it." *Id.* at 252.

CONCLUSION

The judgment of the court of appeals should be vacated and the case remanded for further proceedings.

Respectfully submitted.

PAUL D. CLEMENT
Solicitor General

PETER D. KEISLER
THOMAS O. BARNETT
Assistant Attorneys General

THOMAS G. HUNGAR
Deputy Solicitor General

DEANNE E. MAYNARD
Assistant to the Solicitor General

CATHERINE G. O'SULLIVAN
SCOTT R. MCINTOSH
DAVID SEIDMAN
MARK R. FREEMAN
Attorneys

JAMES A. TOUPIN
General Counsel

STEPHEN WALSH
Acting Solicitor

SHANNON M. HANSEN
HEATHER F. AUYANG
Associate Solicitors
United States Patent and Trademark Office

NOVEMBER 2007

56646 B
(33)
77
23 pgs

No.06-937

In the Supreme Court of the United States

QUANTA COMPUTER, INC., ET AL.,

Petitioners,

v.

LG ELECTRONICS, INC.,

Respondent.

ON WRIT OF CERTIORARI TO
THE UNITED STATES COURT OF APPEALS
FOR THE FEDERAL CIRCUIT

BRIEF OF *AMICI CURIAE* AEROTEL, LTD., AEROTEL U.S.A., INC. AND AEROTEL U.S.A., LLC IN SUPPORT OF RESPONDENT

MICHAEL J. DOYLE
Counsel of Record
OSTRAGER CHONG FLAHERTY
& BROITMAN P.C.
570 LEXINGTON AVENUE
NEW YORK, NY 10022-6894
(212) 681-0600
Counsel for Amici Curiae

LEGAL PRINTERS, Washington DC • 202-747-2400 • legalprinters.com

QUESTION PRESENTED

Whether the Federal Circuit was correct in holding that respondent's patent rights were not exhausted by Intel Corporation's sale of a product to petitioners, where Intel was authorized under a license to manufacture and sell the product conditioned upon a restriction that Intel's customers could not use the product, without license, in systems covered by respondent's system and method claim patents.

TABLE OF CONTENTS

Page

QUESTION PRESENTED i

TABLE OF CONTENTS ii

TABLE OF AUTHORITIES iv

INTEREST OF THE *AMICI CURIAE* 1

STATEMENT 4

SUMMARY OF THE ARGUMENT 5

ARGUMENT 6

I. THE PATENT EXHAUSTION DOCTRINE DOES NOT APPLY TO AN EXPRESSLY CONDITIONAL SALE OR LICENSE 6

A. Only An Unconditional Sale Of A Patented Article Will Automatically Exhaust A Patent Holder's Rights In A Patented Method or System 6

B. There Can Be No Unconditional Sale Or Exhaustion Of Patent Rights If There Has Been No Consideration In The Bargain For Those Rights 8

Page

II. REASONABLE RESTRICTIONS, LIMITATIONS AND CONDITIONS MAY BE PROPERLY PLACED UPON DOWNSTREAM USERS OF PATENTED TECHNOLOGY 11

III. THE FEDERAL CIRCUIT'S RULE PROMOTES THE EFFECTIVENESS OF THE PATENT GRANT WHILE ENSURING A REASONABLE APPROACH TO THE EXHAUSTION DOCTRINE 12

IV. THE FEDERAL CIRCUIT'S RULE PROMOTES FAIRNESS AND APPORTIONS RISKS AND REWARDS FOR PARTICIPANTS INVOLVED IN DIVERSE TECHNOLOGY TRANSACTIONS 15

CONCLUSION 17

TABLE OF AUTHORITIES

Page(s)

Cases

Adams v. Burke,
84 U.S. (17 Wall.) 453 (1873) 6, 14

E. Bement & Sons v. Nat'l Harrow Co.,
186 U.S. 70 (1902) 12

General Talking Pictures Corp. v. Western Electric Co.,
305 U.S. 124 (1938) 11, 14

Keeler v. Standard Folding Bed Co.,
157 U.S. 659 (1895) 6, 9

Mallinckrodt, Inc. v. *Medipart, Inc.*,
976 F.2d 700 (Fed. Cir. 1992)..... 14

Mitchell v. Hawley,
83 U.S. (16 Wall) 544(1873) 6, 7, 8, 9, 11

United States v. General Electric,
272 U.S. 476 (1926) 12, 15

United States v. Univis Lens Co.,
316 U.S. 241 (1942) 7, 8

U.S. Constitution:

Art. 1, §8., Cl. 8 13

Page(s)

Statutes:

35 U.S.C. § 154(a)(1) 13, 16

35 U.S.C. § 271(d)(2) 9

Other Authorities:

U.S. Dep't. of Justice & FTC,
Antitrust Guidelines for the Licensing of Intellectual Property (1995)..... 9

BRIEF OF AEROTEL, LTD., AEROTEL U.S.A., INC. AND AEROTEL U.S.A., LLC AS *AMICI CURIAE* IN SUPPORT OF RESPONDENT

Aerotel, Ltd., Aerotel U.S.A., Inc. and Aerotel U.S.A., LLC (collectively, "Aerotel") respectfully submit this brief pursuant to Supreme Court Rule 37.3 in support of respondent.[1]

Aerotel urges the Court to affirm the judgment of the United States Court of Appeals for the Federal Circuit. In the alternative, Aerotel urges the Court to confirm that exhaustion does not apply where a patentee receives no monetary consideration from a manufacturing licensee, and expressly by contract reserves its patent rights against downstream users of its patented technology.

INTEREST OF THE *AMICI CURIAE*

Aerotel, Ltd. is a privately held Israeli technology company founded in 1985. The company concentrates its activities in the telecommunications

---

[1] Pursuant to Supreme Court Rule 37.6, Aerotel states that no counsel for a party authored this brief in whole or in part, and no counsel or party made a monetary contribution to fund the preparation or submission of this brief. No person other than the *amici curiae* or its counsel made a monetary contribution to its preparation or submission. The parties have consented to the filing of this brief, and their consent letters are on file with the Clerk's Office.

and medical technology fields, selling its products in over 30 countries.

Aerotel has a longstanding interest in the success of the United States patent system. Aerotel, Ltd. is the owner of, *inter alia*, U.S. Patent No. 4,706,275 (the "'275 Patent") entitled "telephone system," dated November 10, 1987.[2] The inventions of the '275 Patent are directed to systems and methods for providing telephone service to customers who have prepaid for that service.

Aerotel, Ltd. concluded its first license under the '275 Patent with Bell Atlantic Corporation in 1994. Thereafter, Aerotel, Ltd. organized Aerotel, U.S.A. Inc. and Aerotel U.S.A., LLC as its exclusive U.S. managing agents and U.S. licensing representatives for its '275 Patent.

Aerotel successfully obtained several licenses and litigation settlements in the ensuing years, including a litigation settlement in 1998 with NACT Telecommunications, Inc. ("NACT"), a manufacturer of systems for making prepaid telephone calls. In the settlement, Aerotel covenanted not to sue NACT for its future manufacture and sale of systems, on the condition that NACT notify each of its customers that they required a license from Aerotel to use the NACT system to practice Aerotel's technology under

---

[2] The '275 Patent expired in 2005.

the '275 Patent. Aerotel received no other consideration for its covenant not to sue NACT.[3]

In 2004, Aerotel commenced an action for infringement of the '275 Patent in the United States District Court for the Southern District of New York entitled *Aerotel, Ltd. v. Primus Telecommunications Group, Inc.*, Civil Action No. 04 CV 10292 (LMM), which is pending. One defendant in Aerotel's action asserts as a defense that it purchased its system for making prepaid telephone calls from NACT, and that Aerotel has exhausted its rights under the method claims in the '275 Patent vis-à-vis that defendant by authorizing NACT to sell a system covered by the '275 Patent system claims.

Aerotel has no direct stake in the particular dispute between petitioners and respondent. Aerotel does have a strong interest, however, in a fair and reasonable interpretation of the patent exhaustion doctrine, since it is both a patent holder and a manufacturer.

Patent exhaustion issues arise in an extraordinary variety of business and commercial contexts. In Aerotel's view, the issues are best evaluated, managed and avoided through the judicious use of reason, negotiation, risk assessment

---

[3] In the settlement, NACT expressly agreed that Aerotel had not exhausted its patent rights, and that it was not granting any license under its patent, either express or implied, to any NACT customer.

and compromise in private contracts between willing participants. Aerotel is most interested in a patent system with fair rules of exhaustion, which promote innovation in industry while balancing the interests of patent owners, licensees, accused infringers and the public.

STATEMENT

This case concerns the applicability of the patent exhaustion doctrine insofar as it relates to a technology transaction involving a patent licensor (respondent), a manufacturing licensee (Intel), and unlicensed downstream users (e.g. petitioners) of the patented technology.

In its agreement with Intel, respondent licensed Intel, for consideration, the right to manufacture and sell patented microprocessor and chipset components to downstream computer system manufacturers, such as petitioners, but received no payment for, and expressly reserved its rights as against downstream manufacturers to combine Intel's licensed components with other non-Intel components in separately patented computer systems.[4] Thus, Intel's downstream customers were expressly prohibited from infringing respondent's system

---

[4] Aerotel expressly preserved its downstream rights because it received no monetary consideration for its covenant not to sue NACT for the manufacture and sale of its patented systems, or, the use of the system by NACT customers in accordance with method claims of Aerotel's '275 Patent.

patents, and Intel's sales of licensed parts were conditional upon its downstream customers obtaining licenses from respondent.

Intel did not obtain a license for its customers under the system patents, thus, the applicability of the exhaustion doctrine is the issue before this Court.

SUMMARY OF THE ARGUMENT

The Federal Circuit ruled correctly that respondent had not exhausted its patent rights, because Intel's sale of licensed components was expressly conditioned on its customers obtaining a license to practice respondent's patented technology. Respondent bargained for a limited grant of its patent rights, expressly excluding from its license, the right for downstream practice of its system patents by Intel's customers. *See* Respondent's Brief at 2. Respondent received royalty payment from Intel solely for its manufacture and sale of components, expressly reserving its patent rights for use by Intel customers of these components in systems subject to separate and distinct patent rights.

The exhaustion doctrine does not apply insofar as respondent did not bargain for or receive "full value" for its technology. However, Aerotel submits that insofar as the Court determines exhaustion doctrine is implicated that it should not reach

transactions, as in Aerotel's NACT Agreement, where a patentee receives no monetary consideration for an authorized manufacture of a patented product or system, expressly reserving its rights as against downstream users of the technology. *See Keeler v. Standard Folding Bed Co.*, 157 U.S. 659 (1895) *quoting Mitchell v. Hawley*, 83 U.S. (16 Wall.) 544, 546-47 (1873)(requiring that "the consideration has been paid to [the patentee] for the thing patented").

ARGUMENT

I. THE PATENT EXHAUSTION DOCTRINE DOES NOT APPLY TO AN EXPRESSLY CONDITIONAL SALE OR LICENSE

A. Only An Unconditional Sale Of A Patented Article Will Automatically Exhaust A Patent Holder's Rights In A Patented Method or System

Analysis of the doctrine of patent exhaustion traditionally begins with *Adams v. Burke*, a nineteenth century case concerning coffin lids where this Court held "in the essential nature of things, when the patentee, or the person having his rights, sells a machine or instrument whose sole value is in its use, he receives the consideration for its use and he parts with the right to restrict that use." *Adams v. Burke*, 84 U.S. (17 Wall.) 453, 456 (1873).

The patent exhaustion doctrine is triggered only by an *unconditional* sale. *See Mitchell*, 83 U.S. at 547. Here, respondent's license to Intel was expressly limited to Intel's manufacture and sale of components, and by its express terms did not extend to Intel's customers the right to combine licensed components with other non-Intel components. Moreover, this conditional agreement required Intel to notify its customers of the limited scope of the license, which it did. Although, Intel was free to sell its components, those sales were conditional, and Intel's customers were expressly prohibited from infringing respondent's combination patents.[5]

Petitioners' proposal that patent exhaustion is triggered by *any* authorized sale of a patented article contravenes this Court's century old jurisprudence. Pet. Br. 1. Petitioners reliance on *United States v. Univis Lens Co.*, 316 U.S. 241, 250 (1942) for the proposition that after a sale, the patentee may only enforce breaches of contractual provisions but "may

---

[5] Aerotel similarly conditioned its covenant not to sue NACT. Aerotel's covenant not to sue expressly disclaims a grant of rights to NACT's downstream customers to use the patented system in a manner which infringed Aerotel's '275 Patent method claims without obtaining a license from Aerotel. Moreover, this conditional agreement required NACT to notify its customers of the limited scope of the license, which it did. Although NACT was free to sell its systems, those sales were conditional, and NACT's customers were expressly prohibited from using the systems in a manner which infringed Aerotel's '275 Patent.

not thereafter, by virtue of his patent, control the use or disposition of the article" by suing for patent infringement is misplaced. Respondent correctly asserts that "[t]he holding in *Univis* thus represents standard exhaustion doctrine: the *unconditional* sale of an article that embodies a patent exhausts certain rights arising from the patent that claims that article." Resp. Br. 29 (emphasis added). *Univis* does not support petitioners' rule that an authorized, but conditional sale of less than all of the patented technology, exhausts a patentee's rights. Petitioners' *per se* rule fails to recognize that a patentee may separately license different sticks in its bundle of patent rights to receive "full value" for its technology. *Mitchell*, 83 U.S. at 546-47. *See also* POINT II, *infra*.

B. There Can Be No Unconditional Sale Or Exhaustion Of Patent Rights If There Has Been No Consideration In The Bargain For Those Rights.

Should the Court reject the Federal Circuit's and respondent's rule, Aerotel urges the Court to hold that there can be no exhaustion of patent rights in situations where the patent holder receives no monetary consideration for a covenant not to sue a system manufacturer, and expressly reserves its rights against downstream users of the systems, where both the system and the method for using the system are patented.

The theory behind the patent exhaustion doctrine is that exhaustion occurs only when the patent holder has bargained for, and received, an amount equal to the full value of the goods that are subject to an unconditional sale. *See Keeler*, 157 U.S. 659 (1895) *quoting Mitchell*, 83 U.S. at 546-47 (requiring that "the consideration has been paid to [the patentee] for the thing patented").

The patent laws, however, impose no requirement on a patent holder to extract full value for a patented system at the outset of a technology transaction. Instead, consideration may be expressly reserved, by the parties to such transaction, for later licensing or enforcement with the ultimate users of the system. *See* U.S. Dep't of Justice & FTC, *Antitrust Guidelines for the Licensing of Intellectual Property* 5 (1995)("limitations on intellectual property licenses may serve procompetitive ends by *allowing the licensor to exploit its property as efficiently .... as possible.*")(emphasis added) This transactional approach is codified in the Patent Statute: "[n]o patent owner otherwise entitled to relief for infringement . . . shall be denied relief . . . by reason of his having . . . authorized another to perform acts which if performed without his consent would constitute contributory infringement of the patent." 35 U.S.C. § 271(d)(2).

Respondent correctly states that "[t]here is simply no way by which a patent holder, when licensing a manufacturer to produce and sell

patented components, could reasonably determine the value of a separate patented system to different downstream purchasers or rationally allocate the value of that system as part of the price of the component license." Resp. Br. 38, note 13. Application of petitioner's rule will require patent holders to inefficiently exploit their property rights by agreeing to value those rights before they have been exploited. Respondent did not receive "full value" for its patented systems because respondent and Intel intended to preserve respondent's ability to require separate licenses from Intel's customers under the system patents. There is thus no ground to deem the amount exchanged for the component license to represent the full value of the separate patented system, or to deem the amounts subsequently exchanged for licensing rights under the separate patents a "double" recovery that would require a conclusion of exhaustion as espoused by petitioner.

Aerotel's litigation settlement with NACT is a more extreme example of the injustice that would be served by petitioner's *per se* rule because Aerotel received no monetary consideration. Aerotel authorized a manufacturer to make and sell a patented system, but received no monetary consideration for that authorization, instead expressly reserving its rights to license or enforce its patent rights against downstream users of the systems. Aerotel's covenant not to sue NACT, and

reservation of its rights, precludes petitioner's concern of a "double recovery" or windfall.

II. REASONABLE RESTRICTIONS, LIMITATIONS AND CONDITIONS MAY BE PROPERLY PLACED UPON DOWNSTREAM USERS OF PATENTED TECHNOLOGY

This Court has repeatedly held that reasonable restrictions on a patented article may be enforced where the restriction passes with the article. The court held in both *Mitchell* and *General Talking Pictures Corp. v. Western Electric Co. Talking Pictures*, 305 U.S. 124 (1938) that the purchaser of an article from a manufacturing licensee takes the article subject to any restrictions that were imposed on the licensee by the patent holder, whether or not the purchaser has notice of those restrictions. *See Talking Pictures*, 305 U.S. at 127. Respondent's brief provides a useful survey of cases before this court where reasonable restrictions on a patent article were enforced where the restriction passes through a chain of ownership. *See* Resp. Br. 41-42

In contrast, Intel did not possess full patent rights in the patented systems. The licensing agreements with Intel expressly prohibited computer system manufacturers from practicing those patents with non-Intel parts. And, through their purchase from Intel, petitioners took the systems subject to that restriction. *Talking Pictures*, 305 U.S. at 127; *Mitchell*, 83 U.S. at 548. Petitioners are, for that

reason, prohibited from practicing those patents with non-Intel parts.

Second, notwithstanding this limitation on Intel's patent rights, the restrictions imposed on petitioners by respondent are independently valid under standard principles of patent law. Holders of a patent, like holders of any property, can sell distinct sticks from their bundle of property interests without losing the remainder. *E.g., United States v. Gen. Elec.*, 272 U.S. 476, 489-90 (1926). In other words, they may impose reasonable conditions on the sale of a patented article, so long as those conditions reasonably relate to the patent rights retained by the patent holder following the sale. *E. Bement & Sons v. Nat'l Harrow Co.,.* 186 U.S. 70, 91 (1902) ("[T]he rule is, with very few exceptions, that any conditions which are not in their very nature illegal with regard to this kind of property [the patent right], imposed by the patentee and agreed to by the licensee for the right to manufacture or use or sell the article, will be upheld by the courts.").

III. THE FEDERAL CIRCUIT'S RULE PROMOTES THE EFFECTIVENESS OF THE PATENT GRANT WHILE ENSURING A REASONABLE APPROACH TO THE EXHAUSTION DOCTRINE

Rigid application of petitioners' proposed rule of law would hinder commerce in general, and the ability of patent holder's to fairly value its

technology. The ultimate users of a product or system, not the manufacturer, often determine its true worth and benefit from its use.

The patent laws serve a valid and useful purpose and are valuable to the people and commerce of the nation. Further, patent owners and inventors have long benefited from a variety of rights granted them under the laws, regulations and constitution of the United States. These contributions and benefits spring from the constitutional underpinnings of the patent laws, ART. 1, SEC. 8., CL. 8, through the application of the statutory framework (e.g. the patent grant defined in 35 U.S.C. § 154(a)(1)), the regulatory mechanisms embodied in Title 37 of the Code of Federal Regulations, centuries of case law considered by this court, as well as the private law created by the parties to lawful contractual agreements.

Legally permissible patent transactions, implemented in commerce through arms length transactions instead of litigation, enhance innovation, foster certainty in commerce and finality in contracts among private participants. However, such permissible transactions do not exist in a vacuum and neither patent misuse nor antitrust violations are tolerated, these having separate appropriate remedies.

But the patent exhaustion doctrine under consideration here need not be so absolute that it

stifles what ought to be perfectly legal and reasonable activities. Disparate commercial transactions are replete with myriad facts and problems, which may be addressed efficiently by the direct parties to a transaction. Absolute, bright line rules cannot foresee all the permutations that a modern, vibrant economy will generate.

Business strategies and commercial contexts vary as widely as the parties involved. Activities reflected in countless transactions have been interpreted by numerous cases before this Court including, *inter alia, Adams v. Burke* and *General Talking Pictures*. Other courts, including the Federal Circuit, also give deference to the variety of transactional possibilities, including the validity of downstream uses of technology, express and implied licenses, and the many permutations and differing commercial terms required for these transactions. *See, generally, Mallinckrodt, Inc.* v. *Medipart, Inc.*, 976 F.2d 700, 704-708 (Fed. Cir. 1992).

When the principle value of technology or a license is downstream, an innovator cannot be expected to bargain away its rights for little or insufficient consideration. But the forms of consideration can often be found in the details of a bargain, such as a license agreement or a sale conditioned upon limitations or restrictions.

There is a place for the patent exhaustion doctrine, but it should not exist to cut off reasonable

downstream rights, which have not been bargained away. A patentee has always been permitted to unbundle the rights granted him. These rights may be bargained away and dealt independently. See *United States. v. Gen. Elec. Co.*, 272 U.S. at 490.

IV. THE FEDERAL CIRCUIT'S RULE PROMOTES FAIRNESS AND APPORTIONS RISKS AND REWARDS FOR PARTICIPANTS INVOLVED IN DIVERSE TECHNOLOGY TRANSACTIONS.

Reversal or limitation of the Federal Circuit's ruling would have enormous practical implications on the nation's commerce, creating unnecessary risk and litigation. Such risks and litigation can be readily minimized by preserving a reasonable rule regarding the exhaustion doctrine, rather than adoption of Petitioner's proposed absolute bright-line approach which will stifle legitimate transactions.

A patentee does not deserve duplicative royalties for that which has been previously sold, but the innovator should always be entitled to secure a fair value for each variety of its intellectual property, and at each stage of its use by a licensee or potential infringer. To force such a licensor to secure its full measure of fair compensation at the earliest stages of a complicated technology transaction will only serve to deprive the innovator of the true value of his contribution, because its ultimate value and variety can rarely be predicted with certainty. Persons

experienced in commercial transactions would be challenged to predict the myriad downstream uses of technology and it should not be an unusual or unreasonable situation for a licensor to fairly reserve some of its rights for future exploitation in both known and new developments.

For example, Aerotel's products and patents are among an untold number that could be adversely affected by a reversal of the Federal Circuit's rule. Such products and related methods and systems require complicated end-use arrangements for successful implementation and these often employ a wide variety of patent types, patent claims and the transferable rights associated with each patent grant. 35 U.S.C. § 154(a)(1).

The Federal Circuit's ruling in this case permits an owner of a patent to engage in appropriate and reasonable negotiations for a fair return on its innovation. A royalty strategy negotiated between willing parties will serve to address a wide variety of legitimate transactions that may not be anticipated today. A flexible, common sense approach to such transactions will not impose financial or practical burdens on manufacturers of technology products.

A manufacturer cannot be expected to contest every patent claim which may be presented, but such manufacturer is expected to exhibit due diligence in evaluating such claims. An evaluation of risks and rewards, and where necessary, negotiating

settlements, will foster commerce and innovation and avoid burdensome litigation.

CONCLUSION

For the foregoing reasons, the decision of the Court of Appeals for the Federal Circuit should be affirmed. In the alternative, the Court should hold that exhaustion does not apply where a patentee receives no monetary consideration from a manufacturing licensee and reserves its rights against downstream users of its patented technology.

Respectfully submitted,

MICHAEL J. DOYLE
(*Counsel of Record*)
OSTRAGER CHONG
FLAHERTY & BROITMAN P.C.
570 Lexington Avenue
New York, NY 10022-6894
(212) 681-0600

Counsel for Amici Curiae

December 10, 2007

56647C

36pgs No. 06-937

IN THE

Supreme Court of the United States

QUANTA COMPUTER, INC., *et al.*,
Petitioners,

v.

LG ELECTRONICS, INC.,
Respondent.

On Writ of Certiorari to the United States Court of Appeals for the Federal Circuit

BRIEF OF AMBERWAVE SYSTEMS CORPORATION AS *AMICUS CURIAE* IN SUPPORT OF RESPONDENT

BRYAN P. LORD
AMBERWAVE SYSTEMS CORPORATION
13 Garabedian Drive
Salem, NH 03079
(603) 870-8700

SONG K. JUNG
Counsel of Record
LAWRENCE S. EBNER
ADRIAN P. MOLLO
MEGAN B. HOFFMAN
McKENNA LONG & ALDRIDGE LLP
1900 K Street, N.W.
Washington, D.C. 20006
(202) 496-7500

Attorneys for Amici Curiae

WILSON-EPES PRINTING CO., INC. – (202) 789-0096 – WASHINGTON, D. C. 20002

TABLE OF CONTENTS

	Page
TABLE OF AUTHORITIES	ii
INTEREST OF THE *AMICUS CURIAE*	1
SUMMARY OF ARGUMENT	3
ARGUMENT	8
I. THE EXHAUSTION DOCTRINE SHOULD NOT APPLY UNLESS AND UNTIL A PATENT HOLDER RECEIVES THE FULL VALUE OF ITS PATENT RIGHTS	8
II. PETITIONERS' INTERPRETATION OF THE EXHAUSTION DOCTRINE WOULD PREVENT PATENT HOLDERS FROM RECEIVING THE FULL VALUE OF THEIR PATENT RIGHTS AND SEVERELY DISRUPT THE PATENT LICENSING MARKETPLACE	18
CONCLUSION	31

TABLE OF AUTHORITIES

CASES	Page
Adams v. Burke, 84 U.S. (17 Wall.) 453 (1873)	8, 9
Aronson v. Quick Point Pencil Co., 440 U.S. 257 (1979)	8, 9, 31
B. Braun Med., Inc. v. Abbott Lab., 124 F.3d 1419 (Fed. Cir. 1997)	*passim*
Bonito Boats, Inc. v. Thunder Craft Boats, Inc., 489 U.S. 141 (1989)	8
Dow Chem. Co. v. United States, 226 F.3d 1334 (Fed. Cir. 2000)	29
eBay Inc. v. MercExchange, L.L.C., 126 S. Ct. 1837 (2006)	8, 26, 31
General Talking Pictures Corp. v. Western Elec. Co., 304 U.S. 175 (1938)	29
Georgia Pacific Corp. v. United State Plywood Corp., 318 F. Supp. 1116 (S.D.N.Y. 1970)	11
Jazz Photo Corp. v. Int'l Trade Comm'n, 264 F.3d 1094 (Fed. Cir. 2001)	13, 18
Kewanee Oil Co. v. Bicron Corp., 416 U.S. 470 (1974)	8
KSR Int'l Co. v. Teleflex Inc., 127 S. Ct. 1727 (2007)	16
Lear, Inc. v. Adkins, 395 U.S. 653 (1969)	31
LG Elec., Inc. v. Bizcom Elec., Inc., 453 F.3d 1364 (Fed. Cir. 2006)	16, 23
Mallinckrodt, Inc. v. Medipart, Inc., 976 F.2d 700 (Fed. Cir. 1992)	*passim*
Microsoft Corp. v. AT&T Corp., 127 S. Ct. 1746 (2007)	17, 18
Mitchell v. Hawley, 83 U.S. (16 Wall.) 544 (1872)	9

TABLE OF AUTHORITIES—Continued

Page

Monsanto Co. v. Scruggs, 459 F.3d 1328 (Fed. Cir. 2006), *cert. denied*, 127 S. Ct. 2062 (2007) 12

Read Corp. v. Portec, Inc. 970 F.2d 816 (Fed. Cir. 1992), *abrogated on other grounds by Markman v. Westview Instruments, Inc.*, 52 F.3d 967 (Fed. Cir. 1995) (en banc) 25

United States v. Fausto, 484 U.S. 439 (1988) 17

United States v. Masonite Corp., 316 U.S. 265 (1942) 9, 10

United States v. Univis Lens Co., 316 U.S. 241 (1942) 8, 10

STATUTES

28 U.S.C. § 1338(a) 25

35 U.S.C. § 154(a) 11

35 U.S.C. § 271(a) 17, 25

35 U.S.C. § 283 26

35 U.S.C. § 284 ..... 11, 25, 31

OTHER AUTHORITIES

27 Samuel Williston, A TREATISE ON THE LAW OF CONTRACTS (4th ed. 2003) § 70:125 30

Brian G. Brunsvold, Dennis P. O'Reilley, *Drafting Patent License Agreements*, § 24.05 (4th ed. 1998) 28

Dinu Gruia, Comment, *Restrictions on Use of Purchased Patented Goods Subject to the Rule of Reason—Mallinckrodt, Inc. v. Medipart, Inc.*, 27 SUFFOLK U. L. REV. 292, 298 (1993) 12

TABLE OF AUTHORITIES—Continued

Page

F. Scott Kieff, *Coordination, Property, Intellectual Property: An Unconventional Approach To Anticompetitive Effects and Downstream Access*, 56 EMORY L.J. 327 (2006) 19

Frank H. Easterbrook, *"Forward: The Court and The Economic System,"* 98 HARV. L. REV. 4, 11 (1984-85) 17

Joseph Allen, *Swords into Plowshares: How Tech Transfer (Unless We Mess It Up) Can Help Change the World*, 41 LES NOUVELLES 219 (Dec. 2006) 17

Michael Porter, *Clusters And Competition*, *in* ON COMPETITION 197 (1998) 19

RESTATEMENT (SECOND) OF CONTRACTS § 152 (1981) 29

S. Rep. No. 97-275 (1982), *as reprinted in* 1982 U.S.C.A.A.N. 11 16

U.C.C. § 2-703 (2004) 25

IN THE

Supreme Court of the United States

No. 06-937

QUANTA COMPUTER, INC., *et al.*,
Petitioners,

v.

LG ELECTRONICS, INC.,
Respondent.

On Writ of Certiorari to the United States Court of Appeals for the Federal Circuit

BRIEF OF AMBERWAVE SYSTEMS CORPORATION AS *AMICUS CURIAE* IN SUPPORT OF RESPONDENT

INTEREST OF THE *AMICUS CURIAE* [1]

Amicus curiae AmberWave Systems Corporation is submitting this brief to urge the Court to affirm the Federal Circuit's modern, pragmatic, and economically sensible interpretation of the patent exhaustion

[1] The parties have consented to the filing of this brief. No counsel for a party authored this brief in whole or in part, and no counsel or party made a monetary contribution intended to fund the preparation or submission of this brief. No person other than *amicus curiae* or its counsel made a monetary contribution to the preparation or submission of this brief.

doctrine, and thereby preserve the technology market's ability to fully and fairly value technologies and patent rights when a patented article is manufactured, sold, or used by multiple companies in the stream of commerce.

AmberWave is a technology development company focused on building bridges between advanced materials science developed at leading universities and energy efficient-related industrial applications. The company and its research collaborators have developed advanced material technology which decreases power consumption in silicon .computer chips, increases the efficiency of solar cells, and increases the performance of highly efficient solid state lighting.

AmberWave's technology is a result of more than $90 million in venture capital investment and 15 years of research at the Massachusetts Institute of Technology, AT&T Bell Labs, and its own advanced research facility in Salem, New Hampshire. The company also collaborates with top researchers at other higher education institutions such as the University of California, Purdue University, Rochester Institute of Technology, and the University of New Hampshire.

AmberWave invests millions of dollars annually in research and development. Because the semiconductor, solar energy, and solid state lighting technology markets are complex, diverse, specialized, and increasingly disaggregated, AmberWave licenses portions of its technology to manufacturers of technology components, and to firms that ultimately use and benefit from the technology. This affords AmberWave's partner companies the flexibility to integrate its advanced technologies into their products and improves the time-to-market for new energy-

efficient products. Further, it provides AmberWave with the means to realize full value for its patented technologies, which it then invests in new technology developments for tomorrow's marketplace.

AmberWave has testified before the Small Business Committee of the U.S. House of Representatives on the importance of strong patents to small businesses. The company believes that to achieve the fundamental objectives of our nation's patent law, the technology marketplace must provide flexibility for buyers and sellers of patented technology to transact freely. Technology buyers must be in a position to negotiate with the actual providers of value. Patent holders must be fully and fairly compensated for the fruits of their innovative activity. A well functioning, complex technology market requires flexibility and freedom to contract, not artificial, paradigm-shifting market restraints such as those being proposed by petitioners here.

SUMMARY OF ARGUMENT

The fundamental issue in this case is whether patent holders suddenly should be disabled from obtaining the full economic value of their patent rights simply because a component, combination of components, or other patented article or system is made, sold, or used by a succession of commercial entities.

Under the guise of preserving the "traditional" patent exhaustion doctrine, a subject which this Court last addressed 65 years ago, petitioners are urging the Court to overturn more recent but still long-standing Federal Circuit precedent, beginning with *Mallinckrodt, Inc. v. Medipart, Inc.*, 976 F.2d 700 (Fed. Cir. 1992) (holding that an otherwise lawful

post-sales restriction on the use of a patented article is enforceable under the patent law). To serve their own pecuniary interests, petitioners contend that a U.S. patent holder's "reward," when its patented product (e.g., a computer component) is combined with other components and used in an end-product (e.g., a personal computer), must be limited to whatever royalty the patent holder receives from a *single licensee* at the beginning of the commercial chain (i.e., from the company that manufactures and sells, but does not use, the component). In most marketplace situations, this new rule would impose an artificial restraint on the freedom to negotiate patent licenses directly with disaggregated, downstream commercial entities. This not only would curtail the technology market in general, but also would deprive patent holders of their patent rights' full value, which usually is measured in terms of a "reasonable royalty."

Petitioners insist that their proposed rule should apply categorically, even where, as is the case here, patents not only cover the manufacture and sale of an article (e.g., microprocessor) by an initial licensee, but also its downstream use by additional commercial entities (e.g., its combination with other components in the production of personal computers that "original equipment manufacturers" such as petitioners assemble and sell to brand-name computer marketers).[2] Pointing to the district court's finding that the first-tier patent licenses involved in this case (i.e., the

---

[2] The patents in suit are limited to the "system" patents (i.e., the patents applicable to the combination of the patented components with other components). Neither Respondent LGE nor its licensee, Intel, manufactured or sold the patented systems.

licenses from Respondent LGE to Intel) are "unconditional," petitioners' confusing and inconsistent position appears to be that although a conditional *license* (such as a patent license that contains field of use restrictions) can in effect impose enforceable post-sales use restrictions on downstream purchasers of a patented article, conditional *sales* (such as sales expressly subject to the very same use restrictions) are barred.

Petitioners' self-serving interpretation of the patent exhaustion doctrine does not make economic sense. In the vast majority of situations, a real-world licensee that merely manufactures and sells—but does not use—a product *component* (e.g., a microprocessor) would not willingly pay a royalty reflecting the economic value that *downstream commercial entities* (i.e., their customers) derive from that component by incorporating it into and selling *end-products* such as personal computers. Nor is there any basis for petitioners' assumption that downstream entities readily would pay an inflated price for the component in order to subsidize the component supplier's payment of such a "full value" royalty. Indeed, in the unlikely event that a downstream entity chose to pay such a price, it would be depriving itself of the ability to make a purchasing decision based on the value that it receives from practicing the patents applicable to the component. Further, the downstream purchaser not only would lose the ability to negotiate directly with the patent holder, but also essentially would forgo the frequently exercised rights to challenge a patent's validity and a patent holder's assertions of patent infringement.

Thus, petitioners' economic theories are fallacious. By barring patent holders from negotiating patent

royalties directly with downstream end-product manufacturers which, like petitioners, financially benefit from practicing the patents covering a system (here, patents covering the combination of the patented components with third-party computer components), petitioners' proposed rule would deprive patent holders of the ability to obtain the full value of their patent rights. That in turn would be deleterious to the entire technology market.

Petitioners offer little consolation by asserting that categorical abrogation of patent rights after the first sale in the stream of manufacture, sale, and use of a patented component would leave a patent holder free to sue downstream entities for breach of contract. They fail to explain why downstream component users and end-product sellers, in the absence of any liability for patent infringement, would voluntarily contract to pay royalties to a patent holder and thereby deprive themselves of the free ride that petitioners are so fervently advocating here. Further, ordinary state-law "expectation" damages for breach of contract would not be an adequate substitute for federal statutory patent infringement remedies.

The only sensible, modern-day interpretation of the patent exhaustion doctrine is the one applied by the Federal Circuit, which is well adapted to the present-day, complex, and increasingly specialized technology marketplace. *See, e.g., B. Braun Med., Inc. v. Abbott Lab.*, 124 F.3d 1419, 1426 (Fed. Cir. 1997); *Mallinckrodt*, 976 F.2d at 708. Consistent with this Court's precedents, it ties exhaustion to the patent holder's receiving *full value* for its patent rights. And by allowing the patent holder to negotiate patent licenses directly with downstream commercial entities until full value is reached, it

fairly apportions payment of that full value among the commercial entities that practice a patent. Furthermore, antitrust, patent misuse, and similar legal or equitable constraints would prevent the patent holder from demanding more than the full value of its patent rights.

Petitioners' proposed transformation of the exhaustion doctrine into a free pass for downstream patent infringement would trigger an abrupt sea change in the way that patent licensing has been conducted in the United States for many years. By making it difficult or impossible for a multitude of patent holders in a broad range of industries to be fully and fairly compensated when they license their patents, petitioners' interpretation would seriously disrupt the technology market, as well as diminish incentives and funds for engaging in innovative activity. That in turn would undermine the most basic objectives of the Patent Act. Moreover, if the Federal Circuit's long-standing patent exhaustion jurisprudence were overturned, countless existing patent licensing agreements negotiated on the basis of suddenly mistaken mutual assumptions regarding the payment of royalties from downstream entities either would have to be renegotiated by the parties or rescinded by the courts. To make matters worse, technology innovators very well might prefer, if not need, to sue multiple parties for patent infringement rather than receive less than full value for licensing their patents.

ARGUMENT

I. THE EXHAUSTION DOCTRINE SHOULD NOT APPLY UNLESS AND UNTIL A PATENT HOLDER RECEIVES THE FULL VALUE OF ITS PATENT RIGHTS

"[T]he federal patent system . . . seeks to foster and reward invention." *Aronson v. Quick Point Pencil Co.*, 440 U.S. 257, 262 (1979). It "embodies a carefully crafted bargain for encouraging the creation and disclosure of new, useful, and nonobvious advances in technology and design in return for the exclusive right to practice the invention for a period of years." *Bonito Boats, Inc. v. Thunder Craft Boats, Inc.*, 489 U.S. 141, 150-51 (1989); *see also Kewanee Oil Co. v. Bicron Corp.*, 416 U.S. 470, 480 (1974) ("The patent laws promote this progress by offering a right of exclusion for a limited period as an incentive to inventors to risk the often enormous costs in terms of time, research, and development."); *United States v. Univis Lens Co.*, 316 U.S. 241, 250 (1942) ("The declared purpose of the patent law is to promote the progress of science and the useful arts by granting to the inventor a limited monopoly, the exercise of which will enable him to secure the financial rewards for his invention.").

This Court long has recognized that the licensing of patent rights is consistent with the patent law's objectives. *See, e.g., Adams v. Burke*, 84 U.S. (17 Wall.) 453, 456 (1873) ("The right to manufacture, the right to sell, and the right to use are each substantive rights, and may be granted or conferred separately by the patentee."); *see generally eBay Inc. v. MercExchange, L.L.C.*, 126 S. Ct. 1837, 1840 (2006) ("[S]ome patent holders . . . might reasonably prefer to license their patents, rather than undertake efforts

to secure the financing necessary to bring their works to market themselves."). Accordingly, "[p]ermitting inventors to make enforceable agreements licensing the use of their inventions in return for royalties provides an additional incentive to invention." *Aronson*, 440 U.S. at 262.

Under this Court's classic patent exhaustion cases, the most recent of which, *Univis*, was decided 65 years ago, patent rights are exhausted only when a patent holder (or its licensee) has received its full reward for making an invention available to industry or the public. In *Adams v. Burke*, the Court explained that "the patentee or his assignee having in the act of sale received *all the royalty or consideration which he claims for the use of his invention* in that particular machine or instrument, it is open to the use of the purchaser without further restriction on account of the monopoly of the patentees." 84 U.S. (17 Wall.) at 456 (emphasis added). Similarly, in *Mitchell v. Hawley*, 83 U.S. (16 Wall.) 544, 547 (1872), the Court indicated that when a patentee "has himself constructed a machine and sold it *without any conditions*, or authorized another to construct [and] sell [or] use . . . it, *without any conditions*, and *the consideration has been paid to him for the thing patented* . . . the patentee must be understood to have parted to that extent with all his exclusive right" (emphasis added). And in *United States v. Masonite Corp.*, 316 U.S. 265 (1942), decided the same day as *Univis*, the Court, citing *Univis* and earlier cases, explained that in assessing the "strict limitations on the power of the patentee to attach conditions to the use of the patented article . . . [t]he test has been whether or not there has been such a disposition of the article that it *may fairly be said that the patentee*

has received his reward for the use of the article." *Masonite*, 316 U.S. at 277-78 (emphasis added).

Thus, as the Court indicated in *Univis*, its "decisions have uniformly recognized that the purpose of the patent law is fulfilled with respect to any particular article *when the patentee has received his reward for the use of his invention* by the sale of the article, and that *once that purpose is realized* the patent law affords no basis for restraining the use and enjoyment of the thing sold." 316 U.S. at 251 (collecting cases) (emphasis added). In other words, this Court's cases all contemplate having a patent holder receive full value for its patent rights before patent exhaustion can occur.

Petitioners are urging the Court to turn this principle on its head. They argue that the first sale of a patented article automatically extinguishes all patent rights—and thereby bars conditional sales that impose otherwise lawful post-sale restrictions on the downstream commercial use of a patented article (e.g., a restriction against infringing a system patent by combining a patented microprocessor with third-party computer components)—*regardless* of whether the purpose of the patent law has been fulfilled by affording the patent holder the full value of its patent rights. In today's multi-tiered, disaggregated technology market, patented components are manufactured, purchased, and integrated by a succession of specialized commercial entities. Royalties paid to the patent holder by the company that manufactures a component and then sells it downstream to entities that incorporate the component into an end-product often do not represent the full value of the patent holder's rights.

The line of Federal Circuit cases which petitioners seek to overturn is fully consistent with the principle, implicit if not explicit in this Court's precedents, that exhaustion of patent rights occurs only when a patent holder obtains compensation, usually measured in terms of a "reasonable royalty," representing the full value of its patent rights.[3] In *Mallinckrodt v. Medipart* the Federal Circuit explained that a patent holder's "right to exclude may be waived in whole on in part." 976 F.2d at 703. Why would a rational patent holder, which has incurred enormous risks and costs in developing an invention, agree to part with its *entire* "right to exclude," 35 U.S.C. § 154(a), for something *less* than the patent rights' full value? Yet, that is precisely the economically distorted patent licensing scheme which petitioners are urging this Court to substitute for the clear, rational, and orderly free-market system that the Federal Circuit has allowed to flourish. It is an exquisitely *fair* system because in return for taking the risks and incurring the costs of innovative activity, and then making the fruits of those labors available to industry and the public, the patent holder has the right to be compensated for the full value of its patent rights—no more, and no less.

---

[3] A "reasonable royalty" is the familiar standard that has been used for decades in patent infringement suits, *see* 35 U.S.C. § 284 (providing that in the event of patent infringement, a patent holder is entitled to no "less than that a reasonable royalty for the use made of the invention by the infringer"), and also in patent licensing negotiations. The leading case of *Georgia Pacific Corp. v. United State Plywood Corp.*, 318 F. Supp. 1116, 1120 (S.D.N.Y. 1970), lists some of the many factors that courts in patent infringement suits take into account to determine what reasonable royalty would have been agreed upon in a hypothetical negotiation between a willing patent holder and a willing licensee.

In *Mallinckrodt* the court of appeals, after carefully analyzing Supreme Court exhaustion precedents, held that restrictions placed on the post-sale use of patented articles are enforceable under the patent law "[u]nless the condition violates some other law or policy (in the patent field, notably the misuse or antitrust law . . .)." 976 F.2d at 708; *see* Dinu Gruia, Comment, *Restrictions on Use of Purchased Patented Goods Subject to the Rule of Reason—Mallinckrodt, Inc. v. Medipart, Inc.*, 27 SUFFOLK U. L. REV. 292, 298 (1993) ("The Federal Circuit's refusal in *Mallinckrodt* to construe the exhaustion doctrine as applying indiscriminately to all restrictions on patented goods is consistent with precedent."). Building upon *Mallinckrodt*, the Federal Circuit in *B. Braun Medical v. Abbott Laboratories* held as follows:

> As a general matter, we explained [in *Mallinckrodt*] that an *unconditional* sale of a patented device exhausts the patentee's right to control the purchaser's use of the device thereafter. The theory behind this rule is that *in such a transaction, the patentee has bargained for, and received, an amount equal to the full value of the goods*. This exhaustion doctrine, however, does not apply to an *expressly conditional* sale or license. In such a transaction, it is more reasonable to infer that the parties negotiated a price that reflects *only the value of the "use" rights conferred by the patentee*.

124 F.3d at 1426 (internal citations omitted) (emphasis added). The Federal Circuit has consistently applied these principles. *See, e.g., Monsanto Co. v. Scruggs*, 459 F.3d 1328, 1336 (Fed. Cir. 2006), *cert. denied*, 127 S. Ct. 2062 (2007) ("The first sale/patent exhaustion doctrine establishes that the *unrestricted* first sale by a patentee of his patented article ex-

hausts his patent rights in the article.") (emphasis added); *see also Jazz Photo Corp. v. Int'l Trade Comm'n*, 264 F.3d 1094, 1105 (Fed. Cir. 2001) ("The *unrestricted* sale of a patented article, by or with the authority of the patentee, 'exhausts' the patentee's right to control further sale and use of that article by enforcing the patent under which it was first sold.") (emphasis added).

Contrary to the Solicitor General's assertion, the Federal Circuit, in holding that a patent holder can preserve its patent rights by imposing otherwise lawful post-sales conditions on use of a patented product, has neither "diluted" the exhaustion doctrine nor "downgraded" it into some sort of "default presumption." U.S. Br. at 7, 8. Instead, by holding that a patent holder can expressly condition a sale (as well as a license) in order to obtain royalties from downstream commercial users of a patented article or system (e.g., from computer manufacturers that combine patented microprocessors with third-party computer components), the Federal Circuit has brought this Court's "traditional" exhaustion doctrine into the modern age.[4]

To be sure, in some circumstances, such as where a patent holder manufactures and sells a consumer end-product, or licenses a single company to do so in return for payment of a reasonable royalty, the sale of the product would be unconditional and the patent holder's rights are exhausted. This is because the

---

[4] Petitioners' contention that "Congress has never seen a need to modify this Court's exhaustion precedents," Pet. Br. at 45, proves nothing. It is equally true that if Congress disagreed with the Federal Circuit's interpretation and application of the exhaustion doctrine, it could have modified that court's exhaustion precedents at some point during the past 15 years.

patent holder has received compensation (either sales revenues or a royalty) reflecting the full value of its patent rights. *See B. Braun*, 124 F.3d at 1426 ("[I]n such a transaction, the patentee has bargained for, and received, an amount equal to the full value of the goods.").

But in the real world, the royalties paid in connection with a "first sale" (e.g., sale of a patented component by a single licensee in the commercial chain) often do not reflect the full value of patent rights (i.e., are not equivalent to a reasonable royalty), and as a result, should not trigger patent exhaustion. Where, as here, there are multiple, disaggregated entities that practice interrelated but independent patents in the stream of commerce—such as where one company (e.g., Intel) manufactures and sells a component (e.g., microprocessors and chipsets) to other companies (e.g., petitioners) that combine it with additional components into end-products (e.g., personal computers) that are marketed to the public by a third tier of companies (e.g., Dell; Hewlett-Packard; Gateway)—payment of a royalty by the first licensee (i.e., Intel, the company that merely manufactures and sells, *but does not use*, the component) almost certainly would not represent the full value of the patent holder's rights. This is particularly true where, as here, separate and independent patents cover the component *and* its combination with other components in an end-product. Since the first licensee does not practice or benefit financially from that combination, why should it agree or be expected to pay a royalty based on financial benefits that only its customers receive?

For this reason, the Federal Circuit has correctly recognized that a patent holder must be able to nego-

tiate patent licenses and royalties with the downstream commercial entities that practice its patents (here, the LGE system patents that apply to the combination of Intel's microprocessors and chipsets with third-party components in personal computer systems) until full value is reached. Under the Federal Circuit's jurisprudence, ranging from *Mallinckrodt* to the opinion below, patent holders can preserve their patent rights for this purpose by ensuring that each such downstream company is *expressly notified* that its purchase or use of the patented article is conditioned upon the payment of a royalty. *See B. Braun*, 124 F.3d at 1426 (the "exhaustion doctrine . . . does not apply to an expressly conditional sale"); *Mallinckrodt*, 976 F.2d at 702-03 (sale of medical device expressly conditioned upon "Single Use Only" label notice). The negotiated royalty paid by a downstream user pursuant to such an expressly conditional sale does not normally represent the full value of the patent holder's rights, but is intended to be a fair reflection of the particular value that the user enjoys by practicing the patents.

Continuing to afford patent holders the freedom to negotiate patent licenses and royalties with downstream companies that practice patents for their own financial benefit does not mean that patent holders can "demand and obtain royalties beyond those that the [patent] statute was intended to provide." U.S. Br. at 7. The Federal Circuit has emphasized in this regard that express post-sale restrictions on use of a patented product

> are contractual in nature and are subject to antitrust, patent, contract, and any other applicable law, as well as equitable considerations

> such as patent misuse. Accordingly, *conditions that violate some law or equitable consideration are unenforceable*. On the other hand, violation of valid conditions entitles the patentee to a remedy for either patent infringement or breach of contract.

B. Braun, 124 F.3d at 1426 (internal citations omitted) (emphasis added); *see also Mallinckrodt*, 976 F.2d at 708 (holding that in the absence of antitrust violations or patent misuse, "private parties retain the freedom to contract concerning conditions of sale").

The opinion below relies upon these well established principles. *See LG Elec., Inc. v. Bizcom Elec., Inc.*, 453 F.3d 1364, 1369-70 (Fed. Cir. 2006).[5] Although petitioners refer to the "Federal Circuit's confusion" on the subject of patent exhaustion, Pet. Br. at 40, that court's carefully considered and consistently applied interpretation of the exhaustion doctrine should not be so easily dismissed. The Court of Appeals for the Federal Circuit was established in part to "provide[] a forum that will increase doctrinal stability in the field of patent law." S. Rep. No. 97-275, at 5 (1982), *as reprinted in* 1982 U.S.C.A.A.N. 11, 15. That is exactly what the Federal Circuit has accomplished as to the patent exhaustion doctrine. *See* Gruia, Comment, *supra* at 299 ("The *Mallinckrodt* court provides lower courts with a clear and consis-

---

[5] By allowing a patent holder to negotiate freely and fairly with each company that practices its patents, those principles embody the type of "flexible approach" that this Court recently indicated should be followed when interpreting and applying basic patent law principles. *See KSR Int'l Co. v. Teleflex Inc.*, 127 S. Ct. 1727, 1739 (2007) ("rejecting the rigid approach of the Court of Appeals" on the question of obviousness).

tent standard by which to evaluate the enforceability of restrictions on patented goods."). Indeed, "[b]ecause of the unique character of the Federal Circuit, its conclusions are entitled to special deference by this Court." *United States v. Fausto*, 484 U.S. 439, 464 n.11 (1988) (Stevens, J. dissenting).

Furthermore, there is nothing "vexatious," Pet. Br. at 54, about a patent holder seeking to obtain the full value of its patent rights from companies, such as petitioners, that financially benefit from practicing the patents. As discussed above, seeking the full value of patent rights not only is perfectly consistent with the exhaustion doctrine, but also with the underlying objectives of the patent law itself. It is *petitioners'* position that would subvert the patent law's purposes by diminishing incentives and curtailing an important source of funding for innovative activity. "When a court restricts the patent holder's ability to collect royalties, it reduces the rewards anticipated from patents and thus the incentive for other people to invent." Frank H. Easterbrook, *"Forward: The Court and The Economic System,"* 98 HARV. L. REV. 4, 11 (1984-85). "There is an ethical underpinning required for any society that wants its entrepreneurs to do what they do best. They must be recognized and rewarded." Joseph Allen, *Swords into Plowshares: How Tech Transfer (Unless We Mess It Up) Can Help Change the World*, 41 LES NOUVELLES 219, 223 (Dec. 2006).[6]

---

[6] Insofar as Intel sold the patented components *outside* of the United States, the exhaustion doctrine would not be triggered, since the "authorized sale" (whether made under a "conditional license" or by a "conditional sale") did not occur "within the United States." 35 U.S.C. § 271(a). In *Microsoft Corp. v. AT&T Corp.*, 127 S. Ct. 1746, 1752 (2007), the Court reaffirmed that there is a presumption against the extraterritorial application of

II. PETITIONERS' INTERPRETATION OF THE EXHAUSTION DOCTRINE WOULD PREVENT PATENT HOLDERS FROM RECEIVING THE FULL VALUE OF THEIR PATENT RIGHTS AND SEVERELY DISRUPT THE PATENT LICENSING MARKETPLACE

Petitioners contend that their proposed prohibition against conditional sales—which they misleadingly describe as the "traditional" exhaustion doctrine—"makes economic and policy sense." Pet. Br. at 15. Exactly the opposite is true. In the unnatural and constricted patent licensing marketplace that petitioners are asking this Court to create, patent holders rarely would be able to obtain the full value of their patent rights. Instead, downstream commercial entities that economically benefit from purchasing and using patented articles, including by incorporating patented components into a patented system for production of a consumer end-product, would be absolved of any patent infringement liability. They would enjoy a free ride while incentives for engaging in innovative activity and patent licensing would be undermined significantly.

U.S. patent law. *See* 127 S. Ct. at 1752 ("Our patent system makes no claim to extraterritorial effect; these acts of Congress do not, and were not intended to, operate beyond the limits of the United States . . . .") (internal quotation marks omitted). Thus, in order for patent exhaustion to apply, the "authorized first sale must have occurred under the United States patent," which requires that the first sale occur "in the United States." *Jazz Photo Corp. v. Int'l Trade Comm'n*, 264 F.3d at 1105 (citing *Boesch v. Graff*, 133 U.S. 697, 701-703 (1890), for the proposition that a lawful foreign purchase does not obviate the need for a license from the U.S. patentee before importation into and sale in the United States).

Therefore, petitioners' interpretation of the exhaustion doctrine represents bad economic policy. Today's modern economy is complex, specialized, and increasingly disaggregated. *See* Michael Porter, *Clusters And Competition*, *in* ON COMPETITION 197, 209 (1998) (discussing why today's "more dynamic environment can render vertical integration inefficient, ineffective, and inflexible"). Our nation's economy, and innovative firms such as *amicus curiae* AmberWave Systems, benefit from intellectual property policies that provide incentives for coordination and negotiation among commercial entities. *See generally* F. Scott Kieff, *Coordination, Property, Intellectual Property: An Unconventional Approach To Anticompetitive Effects and Downstream Access*, 56 EMORY L.J. 327, 345 (2006) (explaining that "the availability of coordination helps [disaggregated commercial entities] to be more specialized in the skills and resources they each can bring to a collective enterprise than they would have been without the ability to coordinate"). By affording a technology innovator the flexibility to negotiate patent licenses directly with downstream commercial entities until full value is reached, the Federal Circuit's exhaustion jurisprudence encourages coordination between the patent holder and the ultimate beneficiary of the patented technology. This not only reflects current marketplace realities, but also sound public policy.

1. *Petitioners' interpretation of the exhaustion doctrine is economically unrealistic and unworkable.* According to petitioners, their proposed rule "minimizes transaction costs by forcing the patent owner to exact the full value of its patent rights in one negotiation with the first purchaser, which can then share the burden with the rest of the distribution chain by charging a higher price." *Ibid.* To the

contrary, petitioners' notion that a patent holder likely could obtain "full value" from a single licensee at the top of the distribution chain, especially where, as here, that licensee merely produces and sells, and does not use, a patented component that is used only by downstream entities to manufacture and sell end-products, has no basis in reality.

A simple hypothetical illustrates this point. Suppose a patent holder (P) possesses patents covering *both* a computer microprocessor and its combination with other components in personal computer systems.[7] P licenses its patents to a microchip manufacturer (C) for a royalty in the amount of $1 for each microprocessor produced and sold. C, which does not manufacture personal computer systems, then supplies the microprocessors to a computer manufacturer (M) for a net sales price of $5 per unit. M combines the patented microprocessor with other components in order to assemble personal computers, which it supplies to brand-name computer companies at a net sales price of $500 per unit.

Under petitioners' supposedly "traditional" view of the exhaustion doctrine, P would be strictly limited to the $1 royalty that it receives from C. According to petitioners, the exhaustion doctrine bars P from asserting any patent rights against, or collecting any royalty from, M, even though M derives substantial economic value from practicing the system patents. Petitioners speculate that C could just agree up front to pay a royalty representing the full *downstream value* of P's patent rights. For example, if that full value, measured as a reasonable royalty, were $20

---

[7] The patents covering the personal computer system may or may not include method patents as well as device patents.

per personal computer system sold by M, petitioners assert that C for some reason would voluntarily agree to pay such a substantially higher amount as a royalty to P. But why would C rationally agree to pay a $20 royalty if it is merely supplying microprocessors to M, and for a price of only $5? Petitioners assert that C could just inflate the price, for example, to $19 per microprocessor. But why would M, which petitioners argue is *not liable for patent infringement*, agree to pay $19 to C for a microprocessor that it otherwise can purchase for just $5 (or perhaps even for less from another source)? Furthermore, M very well may prefer to challenge the validity and/or infringement of the patents rather than pay such a high price to subsidize the "full value" royalty that petitioners erroneously assume C would be willing to pay to P.

Petitioners, therefore, simply are wrong when they assert that "[a] rational patentee cannot obtain more by negotiating separately . . . than he could have obtained by charging the entire amount to the first party in the chain and relying on it to pass the cost along in the form of higher prices." Pet. Br. at 49. In reality, there are many types of situations in which petitioners' facile interpretation of the exhaustion doctrine would artificially limit rational market negotiations and deprive patent holders of the full value of their patent rights.

2. *Petitioners' interpretation also is unfair to downstream commercial entities that purchase and use patented components in producing an end-product.* If petitioners' theories were correct, then downstream purchasers and users (such as petitioners themselves) would be at the mercy of component suppliers which, according to petitioners, would inflate their

prices in order to subsidize the higher royalties that they supposedly would agree to pay to patent holders.

Under petitioners' top-heavy patent licensing scheme, a patent holder, despite the inherent risks of having a sole supplier, would have to choose a single licensee, which petitioners argue must be the sole source of royalties for downstream entities' use of a patented component in producing an end-product. This single licensee would have to be the company that the patent holder believes has the most economic clout to *force* downstream entities to pay an inflated component price in order to subsidize the licensee's royalty payments, even if those downstream purchasers and users question whether the patents at issue are valid or would be infringed.

Rather than maintaining the current marketplace practice of allowing each downstream entity that uses a patented component to determine for itself—based on its own, often proprietary knowledge and business information—what value that use has, and to negotiate, directly with the patent holder, a fair royalty based on that particular use and value, petitioners would compel the first (and only) licensee, which in many cases does not even use the component, to make downstream "value" predictions for every one of its potential customers. For example, suppose a microchip manufacturer (C) wishes to produce and sell a new type of microprocessor. C hopes that it may be able to sell the microprocessor to at least three types of customers: (i) M-1, companies which manufacture high priced, high-end personal computers that are continuously replaced by newer models; (ii) M-2, companies which manufacture lower priced commercial computers that are sold in bulk quantities for office use and are less frequently

replaced by new models; and (iii) M-3, companies which refurbish used computers, including by upgrading them with new microprocessors.

Under petitioners' proposed interpretation of the exhaustion doctrine, C, the microchip manufacturer, would have to *predict* which specific computer manufacturers would purchase the new microprocessor; exactly how and for what length of time those companies would use the microprocessors in particular computer models that they manufacture; and what the net sales prices of those companies' computers (containing the new microprocessor) would be. According to petitioners, C then supposedly would agree to pay a "full value" royalty based on this sort of unilateral guesswork, in which M-1, M-2, and M-3 would have no direct input. Indeed, there would be no prior notice at all to downstream entities such as M-1, M-2, and M-3, which according to petitioners, simply should be saddled with "a higher price" for the patented components that they purchase and use. Pet. Br. at 15. *That* scenario would be a recipe for "inconvenience, annoyance, and inefficiency." U.S. Br. at 27.

In contrast, under the Federal Circuit's enlightened and long-standing interpretation of the exhaustion doctrine, there is no risk of surprise, no unfairness to downstream companies. A sale of a patented article to a downstream entity can be conditional (i.e., subject to a reservation of patent rights) only if there has been an express notice to the purchaser. *See B. Braun*, 124 F.3d at 1426 ("This exhaustion doctrine . . . does not apply to an *expressly* conditional sale . . . .") (emphasis added); *see also LG Elec. v. Bizcom*, 453 F.3d at 1370 ("[The] conditional agreement required Intel to notify its customers of

the limited scope of the license, which it did."). Thus, under the Federal Circuit's exhaustion jurisprudence, downstream entities know in advance which component suppliers assert patent rights and can make their purchasing decisions based on that information.

3. *Downstream commercial entities cannot reasonably be expected to enter into contracts for the payment of royalties in the absence of any threat of patent infringement.* Petitioners argue that "[a]fter an authorized sale the patentee may enforce *contractual* promises it has obtained from the purchaser by suing for breach." Pet. Br. at 1-2; *see also* U.S. Br. at 7 (arguing that "[t]he doctrine bars the use of patent law (but not contract law) to enforce restrictions on a purchaser's use or resale of a patented article"). According to petitioners, a patent holder "[l]ike any ordinary seller of goods . . . may insist that purchasers sign contracts agreeing that they will make future payments to [the patent holder], or use or resell the purchased goods only in certain ways." Pet. Br. at 14.

The suggestion that downstream entities, which petitioners contend are immune from patent infringement, somehow would voluntarily agree to bind themselves contractually to "make future payments" to the patent holder, borders on disingenuous. If such contracts were a genuine possibility, then petitioners long ago would have entered into contracts with LGE.

Furthermore, even if the hypothetical contracts that petitioners postulate were real, the remedies available for their breach simply would not be an adequate substitute for a patent infringement suit. Assuming that a downstream entity signed some sort of contract (other than a patent license) with a patent

holder and then breached that contract, the patent holder presumably would be able to file a state court suit against the contracting party for expectation damages. *Cf.* U.C.C. § 2-703 (2004) (Seller's Remedies In General). If there were more than one downstream company in privity of contract, the patent holder very well may have to file multiple suits in several states. Moreover, if these hypothetical contracts were with foreign entities, patent holders may have to pursue breach of contract remedies (which vary from country to country) in foreign tribunals around the world.

In comparison, a patent infringement suit would afford the patent holder a single federal forum. *See* 28 U.S.C. § 1338(a). It could proceed in federal district court against all infringers (e.g., the manufacturer licensee subject to a use restriction and any of its customers that violate the restriction). *See* 35 U.S.C. § 271(a) (i.e., "whoever without authority . . . uses . . . or sells any patented invention . . . infringes the patent."). And if the patent holder won, it would be awarded "damages adequate to compensate for the infringement but in no event less that a reasonable royalty for the use made of the invention by the infringer, together with interest and costs as fixed by the court." *Id.* § 284. In addition, in some circumstances, such as where there is willful infringement, a district court, in its discretion, "may increase the damages up to three times the amount found or assessed." *Ibid*; *see generally Read Corp. v. Portec, Inc.* 970 F.2d 816, 826 (Fed. Cir. 1992), *abrogated on other grounds by Markman v. Westview Instruments, Inc.*, 52 F.3d 967 (Fed. Cir. 1995) (en banc)) ("The paramount determination in deciding to grant enhancement and the amount thereof is the egregiousness of the defendant's conduct based on all the facts

and circumstances."). Furthermore, regardless of whether injunctive relief were available under state law for breach of contract, the federal Patent Act expressly authorizes district courts in patent infringement suits to issue injunctions "in accordance with the principles of equity." 35 U.S.C. § 283; *see eBay*, 126 S. Ct. at 1841.

4. *Petitioners' confusing and contradictory interpretation of the exhaustion doctrine would create marketplace uncertainty.* The patent exhaustion principles that petitioners are challenging have been in place, and have served as the basis for myriad patent licensing agreements, since at least 1992. Regressing to what petitioners claim are pre-*Mallinckrodt* "traditional" exhaustion principles—principles which petitioners in their certiorari petition argued "are notoriously confusing," Pet. Br. at 7—would create considerable uncertainty, if not chaos, in the technology marketplace.

One major source of confusion would be the murky distinction that petitioners have attempted to draw between "conditional licenses" and "conditional sales." This seems to be a distinction without a difference since petitioners appear to acknowledge that conditional licenses in effect permit the same types of downstream restrictions on purchasers of patented articles (e.g., a prohibition against combining a patented component with third-party component) that petitioners seek to prohibit by means of conditional sales.[8]

---

[8] *See* Pet. Br. at 28-29 ("Although restrictions imposed on *purchasers* are not enforceable through infringement suits, this Court has permitted conditions imposed on manufacturing *licensees* . . . this Court held that if a purchaser knowingly buys

The absence of a clear and principled, functional distinction between conditional licenses and conditional sales reflects the perplexing state of this Court's exhaustion jurisprudence *prior* to the advent of the Federal Circuit. In *B. Braun* the court of appeals brought clarity to the exhaustion doctrine, in part by recognizing that there is no logical reason to prohibit through conditional sales the same downstream patent use restrictions that can be accomplished through conditional licenses. Thus, the court held that the "exhaustion doctrine . . . does not apply to an expressly conditional *sale or license*." 124 F.3d at 1426 (emphasis added).

Nevertheless, petitioners illogically contend that (i) a downstream user of a patented article is free from claims for patent infringement even though the manufacturer, under an unrestricted license, sold the article with express notice to the purchaser that the sale was conditional, but that (ii) the same purchaser would be subject to infringement claims if the manufacturer's license was conditional, even though no notice of the license's restrictions was provided to the purchaser. *See* Pet. Br. at 29 (asserting that in *General Talking Pictures* the Court explained "that

---

from a manufacturing licensee in violation of a restriction in the license, both the licensee and the purchaser may be sued for infringement.") (citing *General Talking Pictures Corp. v. Western Elec. Co.*, 304 U.S. 175 (1938)). The Government's brief attempts to draw the same distinction. *See* U.S. Br. at 15 ("In contrast to the Court's consistent rejection of attempts by patentees to place patent-law limitations on use or resale by purchasers following authorized sales, this Court has repeatedly held that a patentee may require licensees to comply with any lawful restriction to which the parties may agree . . . on pain of liability for patent infringement for both the licensee and purchasers with knowledge of the restriction.").

the cases invalidating restrictions on purchasers did not apply to restrictions in manufacturing licenses"). There is no rational basis for such a distinction.

Furthermore, from the viewpoint of downstream entities (such as petitioners), receiving an express notice that its purchase and use of a patented article is conditional in that it is subject to an assertion of patent rights eliminates any post-sale surprise. In contrast, a conditional license, which may not require any notice to downstream purchasers, creates much more marketplace uncertainty.

Compelling patent holders to protect their downstream patent rights by insisting upon conditional licenses would be detrimental to fostering and maintaining commercial relationships with manufacturers. They may decline to accept a restrictive license from a particular patent holder, or in return for receiving a license that limits the scope of commercial activity, may demand a lower royalty rate. In addition, under petitioners' interpretation of the exhaustion doctrine, a patent holder would not be able to manufacture a product itself, and then sell it into a particular field of use without forfeiting patent rights, unless it could find (or create) some entity to accept a conditional license and market the product for the patent holder. That would *increase*, not decrease, transaction costs.

5. *Adoption of petitioners' interpretation would spawn litigation over a multitude of existing patent licenses, and discourage patent licensing in the future.* For at least the past 15 years, a vast number of licensing agreements have been negotiated against the backdrop of *Mallinkrodt* and its progeny. *See, e.g.*, Brian G. Brunsvold, Dennis P. O'Reilley, *Drafting Patent License Agreements*, § 24.05 (4th ed.

1998) (explaining that the Federal Circuit in *Mallinkrodt* "after careful review of Supreme Court precedent, held that . . . a sale be unconditional to provide a basis for complete exhaustion of the patent rights" and providing "examples of successful court-tested procedures for notices to purchasers").

If the Court were to trigger the seismic marketplace changes that petitioners request, a multitude of existing licensing agreements may abruptly be called into question. For example, suppose the patent holder for a component has negotiated a licensing agreement with a component manufacturer, and the agreed-upon royalty was based on the parties' understanding and assumption that the patent holder could and would negotiate and receive additional royalties from downstream entities that purchase and use the component in producing consumer end-products. Were downstream royalties suddenly nullified or otherwise made unavailable, the patent holder would have an immediate reason to renegotiate the license and royalty with that manufacturer.

In the event the manufacturer refused to renegotiate, then the patent holder may be forced to file a state court suit seeking rescission of the license agreement. *See generally Dow Chem. Co. v. United States*, 226 F.3d 1334, 1345 (Fed. Cir. 2000) (explaining in dispute over patent license that "[r]ecission has the effect of voiding a contract from its inception, *i.e.*, as if it never existed. It is an equitable doctrine which is grounded on mutual mistake . . . in the formation of a contract.") (internal citation omitted); RESTATEMENT (SECOND) OF CONTRACTS § 152 (1981) ("Where a mistake of both parties at the time a contract was made as to a basic assumption on which the contract was made has a material effect on the

agreed exchange of performances, the contract is voidable by the adversely affected party unless he bears the risk of the mistake . . . ."); 27 Samuel Williston, A TREATISE ON THE LAW OF CONTRACTS (4th ed. 2003) § 70:125 ("Whenever it is clearly shown that parties in their contractual dealings have acted under a common mistake of law, then the injured party will be relieved if that can be done without doing an injustice to others and if equity will afford redress.").

Along the same lines, if petitioners were to prevail, hordes of downstream entities that previously had entered into license and royalty agreements with patent holders may contend that they no longer need to comply. In such a case, a patent holder disputing that a particular downstream license agreement is void would be forced to sue for breach of contract. Thus, if the Court were to adopt petitioners' interpretation of the exhaustion doctrine, courts would be deluged with litigation over the validity of patent licenses.

Further, as emphasized above, petitioners' proposed expansion of the patent exhaustion doctrine would eliminate the opportunity for many patent holders and downstream companies that practice patents to enter into patent licensing agreements. While that alone would cause a major disruption in the marketplace, petitioners' new rule could do even more harm because it would reduce patent holders' incentives to license their inventions at all. By limiting patent holders to whatever royalties they can obtain from a single, first-tier licensee, and thereby deprive them of the full value of their patents, patent holders may find it more profitable to refrain from issuing licenses, and instead, sue one or more com-

panies for a reasonable royalty, or even increased damages as provided by 35 U.S.C. § 284. Discouraging the practice of patent licensing would be inconsistent with the basic purposes of the patent law, *see Aronson*, 440 U.S. at 262, create economic inefficiencies, *see eBay*, 126 S. Ct. at 1840, and subject companies to "the necessity of defending an expensive infringement action during the period when [they] may be least able to afford one," *Lear, Inc. v. Adkins*, 395 U.S. 653, 669 (1969).

CONCLUSION

The judgment of the court of appeals should be affirmed.

Respectfully submitted,

BRYAN P. LORD
AMBERWAVE SYSTEMS CORPORATION
13 Garabedian Drive
Salem, NH 03079
(603) 870-8700

SONG K. JUNG
Counsel of Record
LAWRENCE S. EBNER
ADRIAN P. MOLLO
MEGAN B. HOFFMAN
McKENNA LONG & ALDRIDGE LLP
1900 K Street, N.W.
Washington, D.C. 20006
(202) 496-7500

Attorneys for Amici Curiae

December 2007

No. 06-937

In The

Supreme Court of the United States

QUANTA COMPUTER, INC., et al.,

Petitioners,

v.

LG ELECTRONICS, INC.,

Respondent.

On Writ Of Certiorari To The United States Court Of Appeals For The Federal Circuit

BRIEF FOR AMICUS CURIAE AMERICAN ANTITRUST INSTITUTE IN SUPPORT OF PETITIONERS

SHUBHA GHOSH
Professor of Law
SMU DEDMAN SCHOOL OF LAW
3315 Daniel Ave.
Dallas, Texas 75205
(214) 768-2598

ALBERT A. FOER
Counsel of Record
RICHARD M. BRUNELL
AMERICAN ANTITRUST INSTITUTE
2919 Ellicott St., N.W.
Washington, D.C. 20008
(202) 276-6002

COCKLE LAW BRIEF PRINTING CO. (800) 225-6964
OR CALL COLLECT (402) 342-2831

TABLE OF CONTENTS

	Page
Table of Authorities	iii
Interest of *Amicus Curiae*	1
Summary of Argument	1
Argument	4
I. THE FIRST SALE DOCTRINE IS A LONG-ESTABLISHED PRINCIPLE OF INTELLECTUAL PROPERTY CONSISTENT WITH THE GOALS OF PROMOTING INNOVATION AND COMPETITION	4
A. The First Sale Doctrine Is Established By A Long Line Of This Court's Precedents	6
B. The First Sale Doctrine Promotes The Stability Of Contracts And Development Of Markets, And Complements Antitrust Law	10
C. The Transaction At Issue In This Case Is Subject To The First Sale Doctrine	14
II. THE CONDITIONAL SALE DOCTRINE IS INCONSISTENT WITH THIS COURT'S PRECEDENT AND THE POLICIES OF THE FIRST SALE DOCTRINE	16
A. The Federal Circuit's Conditional Sale Doctrine Eviscerates The First Sale Doctrine	16
B. The Federal Circuit's Reasoning Is Faulty	20

TABLE OF CONTENTS – Continued

Page

C. The Conditional Sale Doctrine Conflicts With The Procompetitive Policies Of The First Sale Doctrine 22

Conclusion 27

TABLE OF AUTHORITIES

Page

CASES

Abbott Laboratories v. Brennan, 952 F.2d 1346 (Fed. Cir. 1991) 26

Adams v. Burke, 84 U.S. 453 (1873) 6, 7, 18

B. Braun Medical, Inc. v. Abbott Laboratories, 124 F.3d 1419 (Fed. Cir. 1997) 18, 19, 20

Bandag, Inc. v. Al Bolser's Tire Stores, Inc., 750 F.2d 903 (Fed. Cir. 1984) 21

Bloomer v. McQuewan, 55 U.S. 539 (1853) 6, 9, 10

Bobbs-Merrill Co. v. Straus, 210 U.S. 339 (1908) 8, 9

Continental T.V., Inc. v. GTE Sylvania, Inc., 433 U.S. 36 (1977) 17

eBay Inc. v. Mercexchange, L.L.C., 126 S. Ct. 1837 (2006) 15, 27

General Talking Pictures Corp. v. Western Electric Co., 304 U.S. 175 (1938) 11

Glass Equip. Dev., Inc. v. Besten, Inc., 174 F.3d 1337 (Fed. Cir. 1999) 21

Holmes Group, Inc. v. Vornado Air Circulation Systems, Inc., 535 U.S. 826 (2002) 27

In re Independent Service Organizations Antitrust Litigation, 203 F.3d 1322 (Fed. Cir. 2000) 25

Intel Corp. v. ULSI System Technology, Inc., 995 F.2d 1566 (Fed. Cir. 1993) 22

TABLE OF AUTHORITIES – Continued

Page

Jazz Photo Corp. v. International Trade Comm'n, 264 F.3d 1094 (Fed. Cir. 2001) 9, 22

KSR International Co. v. Teleflex Inc., 127 S. Ct. 1727 (2007).....27

Leegin Creative Products, Inc. v. PSKS, Inc., 127 S. Ct. 2705 (2007).....13

LG Electronics, Inc. v. Bizcom Electronics, Inc., 453 F.3d 1364 (Fed. Cir. 2006).....14, 19, 20, 23

Mallinckrodt, Inc. v. Medipart, Inc., 976 F.2d 700 (Fed. Cir. 1992).....*passim*

Mitchell v. Hawley, 83 U.S. 544 (1873).....9, 21

Monsanto Co. v. Scruggs, 459 F.3d 1328 (Fed. Cir. 2006) 26

Quality King Distributors, Inc. v. L'Anza Research International, Inc., 523 U.S. 135 (1998).....8

Tripoli Co. v. Wella Corp., 425 F.2d 932 (3rd Cir. 1970) 17

United States v. General Electric Co., 272 U.S. 476 (1926).....11, 12

United States v. Univis Lens Co., 316 U.S. 241 (1942).....12, 13, 14, 18

Vincent v. City Colleges of Chicago, 485 F.3d 919 (7th Cir. 2007) 8

z4 Technologies, Inc. v. Microsoft Corp., 434 F. Supp. 2d 437 (E.D. Tex. 2006) 28

TABLE OF AUTHORITIES – Continued

Page

STATUTES

17 U.S.C. §109(a) 8

35 U.S.C. §154(a)(1) 4

35 U.S.C. §271(a) 4

MISCELLANEOUS

Peter Carstensen, *Post-Sale Restraints via Patent Licensing: A "Seedcentric" Perspective*, 16 Fordham Intell. Prop. Media & Ent. L. J. 1053 (2006) 26

Mark R. Patterson, *Contractual Expansion of The Scope of Patent Infringement Through Field-of-Use Licensing*, 49 Wm. & Mary L. Rev. 157 (2007) ..... *passim*

R. Anthony Reese, *The First Sale Doctrine in the Era of Digital Networks*, 44 B.C. L. Rev. 577 (2003) 11

Richard H. Stern, *The Unobserved Demise of the Exhaustion Doctrine in US Patent Law*, 15 Eur. Intell. Prop. Rev. 460 (1993) 11

Uniform Commercial Code §2-202 23

Uniform Commercial Code §2-207(2)(c) 24

INTEREST OF AMICUS CURIAE

The American Antitrust Institute ("AAI") is an independent non-profit education, research, and advocacy organization. Its mission is to advance the role of competition in the economy, protect consumers, and sustain the vitality of the antitrust laws. The Advisory Board of AAI, which serves in a consultative capacity, consists of prominent antitrust lawyers, law professors, economists, and business leaders. *See* http://www.antitrustinstitute.org. AAI's Board of Directors has approved the filing of this brief because AAI believes that the first sale doctrine serves important procompetitive interests that are undermined by the Federal Circuit's narrow interpretation of the doctrine.[1]

SUMMARY OF ARGUMENT

For over a century and a half, the first sale doctrine (also known as the exhaustion doctrine) has provided certainty for users, manufacturers and other business entities in the distribution of goods and services protected by intellectual property law. Patent

[1] The written consents of all parties to the filing of this brief have been lodged with the Clerk. No counsel for a party has authored this brief in whole or in part, and no person or entity other than AAI or its counsel has made a monetary contribution to the preparation or submission of this brief. The individual views of members of the Advisory Board or Board of Directors may differ from the positions taken by AAI.

and copyright law grants to inventors and authors limited rights to control the distribution of the products of their creativity. However, the first sale doctrine creates a bright-line rule that ensures that purchasers of these works can further transfer these items to third parties without the interference of the original intellectual property owners. In this way, the first sale doctrine promotes an active and vibrant marketplace for works created through the benefit of patent and copyright and therefore is integral to the goals of innovation and competition that are at the foundation of the system of intellectual property rights. The doctrine of conditional sale, as articulated and applied by the United States Court of Appeals for the Federal Circuit, allows patent owners to circumvent the first sale doctrine and undermine its beneficial policies, and is inconsistent with this Court's precedent.

Given the intangibility and nonrivalrous characteristic of intellectual property rights, formal legal titling systems cannot readily be created to ensure that such works can be transferred without being at the sufferance of the original patent or copyright owner. The first sale doctrine serves the function of a formal legal titling system for intellectual property. Under the first sale doctrine, a patent or copyright owner exhausts her distribution right upon the first sale of the protected work thereby allowing subsequent purchasers to further transfer the work. The doctrine requires that the intellectual property owner

obtain its consideration in the first sale (or license to sell), before allowing the distribution of a product embodying its intellectual property into the stream of commerce. In this way, it allows for active and vibrant markets for works of art, for novels, for movies, for innovative gadgets containing patented inventions, and for technology itself. The doctrine provides the legal foundation for primary markets, for secondary markets for rentals of these types of works, and for credit markets in which copyright and patents can serve as security interests. Absent the first sale doctrine, business people engaged in the buying and selling of works that are either directly protected by intellectual property or contain components protected by intellectual property may be required to compensate the original intellectual property owner whenever a transfer of interest in the work occurs. And purchasers of such works would always take title subject to the claims of the original intellectual property owner, perhaps unaware of such claims. Such actual or potential interference from the original creator would only serve to raise transaction costs and to create impediments to free and open markets.

Starting with its decision in *Mallinckrodt, Inc. v. Medipart, Inc.*, 976 F.2d 700 (Fed. Cir. 1992), the Federal Circuit has misconstrued this Court's precedent to permit a patent owner that "conditions" the sale of a patented invention to sue subsequent purchasers who violate the condition for patent infringement. The Federal Circuit's justification for the

conditional sale doctrine rests on a misunderstanding of the relationship between the transfer of works protected by intellectual property rights and conditions attendant in contracts that accompany such a transfer. While purporting to rely on contract principles, the Federal Circuit has converted restrictions ancillary to the transfer of a patented invention from contractual rights, subject to the scrutiny under relevant contract, antitrust, and patent law, to intellectual property rights enforceable through a claim for patent infringement, with its attendant panoply of remedies and potential immunity from antitrust scrutiny. Because the Federal Circuit's conditional sale doctrine allows a patent owner to expand the reach of its patent grant and disrupt free and open markets, it should be reversed.

ARGUMENT

I. THE FIRST SALE DOCTRINE IS A LONG-ESTABLISHED PRINCIPLE OF INTELLECTUAL PROPERTY CONSISTENT WITH THE GOALS OF PROMOTING INNOVATION AND COMPETITION.

The grant of a patent to a useful, novel, and nonobvious invention is one step in the development of a free and competitive marketplace. The exclusive rights to make, use, sell, and offer to sell provided by 35 U.S.C. §154(a)(1) and enforced through 35 U.S.C. §271(a) allow the patent owner to distribute its

patented invention and enter into transactions that permit dissemination of the protected product through a chain of manufacture and into the hands of many users. In this way, the existence of a patent is no different from the existence of any other legal rule that facilitates the working of a vibrant market. Like the rules of property, contract, tort, and sundry federal and state statutory schemes that protect consumers, investors, and manufacturers, patent law (and its cousin copyright law) sets ground rules for competition.

The first sale doctrine is one of the key elements of these ground rules. Under the first sale doctrine, once the invention is distributed through a lawful transaction, the invention passes into the hands of the purchaser, no longer subject to the exclusive rights of the patent owner. Like any other commodity, a patented invention enters into commerce and can be further distributed without the original seller encumbering and raising the costs of subsequent transactions. Put simply, the principle underlying the first sale doctrine is that the patent owner obtains one bite at the apple, so to speak, by permitting the owner to extract the commercial returns in the first sale of a patented invention and by preventing him from erecting a tollgate at each subsequent transaction.

A. The First Sale Doctrine Is Established By A Long Line Of This Court's Precedents.

The Court has recognized that the first sale doctrine is important for a functioning market shaped by patent law. The Court first articulated the broad contours of the doctrine in *Bloomer v. McQuewan*:

> The inventor might lawfully sell it to him, whether he had a patent or not, if no other patentee stood in his way. And when the machine passes to the hands of the purchaser, it is no longer within the limits of the monopoly. It passes outside of it, and is no longer under the protection of the act of Congress.

55 U.S. 539, 549 (1852).

In *Adams v. Burke*, 84 U.S. 453 (1873), the Court recognized the first sale doctrine as essential to the nature of transactions transferring patented inventions. In *Burke*, the Court was faced with a territorial use restriction on the manufacturer-assignee, who was not permitted to distribute patented coffin lids outside a ten-mile radius of the City of Boston. When a subsequent assignee of the patent owner sued an undertaker who had purchased the lids and removed them from the territory, the Court found that the first sale doctrine barred the claim. This out-of-territory purchaser, the Court reasoned, had "acquired the right to use that coffin for the purpose for which all coffins are used." *Id.* at 456. "[I]n the essential nature of things," the Court wrote, "when the patentee, or the person having his rights, sells a machine or

instrument whose sole value is in its use, he receives the consideration for its use and he parts with the right to restrict that use." *Id.* The protected work passes "without the limit of the monopoly." *Id.*

What makes the doctrine "essential" is the way in which the patent owner collects his reward for producing and disseminating the invention. As the Court explained in *Burke*, "the patentee or his assignee having in the act of sale received all the royalty or consideration which he claims for the use of his invention in that particular machine or instrument, it is open to the use of the purchaser without further restriction on account of the monopoly of the patentees." *Id.* The first sale doctrine forces the patent owner to negotiate his consideration once and allows the purchaser to make the permitted use of the invention, including further dispositions, without further compensation owed to the patentee. Allowing the patentee to impose post-sale restrictions on use, the Court said, "would be to engraft a limitation upon the right of use not contemplated by the statute nor within the reason of the contract to say that it could only be used within the ten-miles circle." *Id.* In other words, the patentee cannot negotiate terms in the first sale transaction that would expand its rights under the Patent Act and that would be unreasonable under contract law.

Nine years ago, the Court affirmed the broad principle of the first sale doctrine in the copyright context by holding that the doctrine applied to the importation right granted to the copyright owner by

the Copyright Act of 1976. The Court's decision in *Quality King Distributors, Inc. v. L'anza Research Inter. Inc.*, 523 U.S. 135 (1998), relied on a 1908 precedent to recognize the right of a legitimate, overseas purchaser of copyrighted materials to import copyrighted materials into the United States. According to the Court, this right was consistent with the statutory first sale doctrine codifying the Court's holding in *Bobbs-Merrill Co. v. Straus*, 210 U.S. 339 (1908).[2] As the Court held in *Bobbs-Merrill*, "It is not denied that one who has sold a copyrighted article, without restriction, has parted with all right to control the sale of it. The purchaser of a book, once sold by authority of the owner of the copyright, may sell it again, although he could not publish a new edition of it." *Id.* at 350 (quoted in *Quality King Distributors*, 523 U.S. at 141). Just as the copyright owner could not prevent the resale of lawfully purchased books, so the copyright owner could not prevent the importation of merchandise lawfully made under United States copyright law and purchased in the United States.

The first sale doctrine, in patent as well as copyright law, rests on a carefully constructed balance between property and contract rights. The

---

[2] This Court's holding in *Bobbs-Merrill*, which originated the first sale doctrine in copyright, is codified under the Copyright Act at 17 U.S.C. §109(a), and continues to be a keystone in copyright law. *See, e.g., Vincent v. City Colleges of Chicago*, 485 F.3d 919 (7th Cir. 2007).

doctrine recognizes that transactions between patent or copyright owners and purchasers will be subject to a myriad of negotiated terms. In *Bobbs-Merrill,* for example, the Court applied the first sale doctrine to sales "without restriction." This qualifying language recognizes that the copyright or patent owner can impose *contractual* restrictions on the initial purchaser, including, presumably, clear limitations on the right of the initial purchaser to resell the intellectual property. In this way, for example, the owner can create a rental market for intellectual property analogous to rental markets for real or personal property. But as the Federal Circuit itself has acknowledged, "patented articles when sold 'become the private individual property of the purchasers, and are no longer specifically protected by the patent laws.' The fact that an article is patented gives the purchaser neither more nor less rights of use and disposition." *Jazz Photo Corp. v. International Trade Comm'n*, 264 F.3d 1094, 1102 (Fed. Cir. 2001) (quoting *Mitchell v. Hawley*, 83 U.S. 544, 548 (1873)). In other words, limitations imposed in the sale of a patented invention are a matter of contract law, not patent law. The first sale doctrine lets a purchaser of a patent-protected work and all subsequent parties in the chain of distribution know that the work has been transferred free of any *patent* claims of the original owner on the use or disposition of the work, although not necessarily of *contract* claims.

The early case of *Bloomer v. McQuewan* established this important balance between property and

contract in the first sale doctrine. There, the Court said that upon the sale of a patented invention, "if [the patentee's] right to the implement or machine is infringed, he must seek redress in the courts of the State, according to the laws of the State, and not in the courts of the United States, nor under the law of Congress granting the patent. . . . Contracts in relation to it are regulated by the laws of the State, and are subject to State jurisdiction." 55 U.S. at 549-50.

B. The First Sale Doctrine Promotes The Stability Of Contracts And Development Of Markets, And Complements Antitrust Law.

The first sale doctrine should not be understood as a limitation on rights, but as an essential legal doctrine for the construction of competitive markets driven by intellectual property. There are many ways in which the first sale doctrine promotes competition. By permitting unencumbered resale, the first sale doctrine permits competition through the creation of rental markets and markets for second-hand products. Manufacturers at various stages of a production chain can negotiate without fear of interference from patent owners who have obtained their reward through the first negotiation. Creditors can assess the business assets and contracts of business entities and determine appropriate valuation for the purposes of secured or unsecured lending.

Academic commentary supports the role of the first sale doctrine in maintaining the health and dynamism of competitive markets. *See, e.g.*, Mark R. Patterson, *Contractual Expansion of the Scope of Patent Infringement Through Field-of-Use Licensing*, 49 Wm. & Mary L. Rev. 157, 209-11 (2007) (criticizing application of conditional sale doctrine to field-of-use restrictions enforced against downstream purchasers); R. Anthony Reese, *The First Sale Doctrine in the Era of Digital Networks*, 44 B.C. L. Rev. 577 (2003) (identifying the role of the first sale doctrine in promoting dissemination of works in the marketplace); Richard H. Stern, *The Unobserved Demise of the Exhaustion Doctrine in US Patent Law*, 15 Eur. Intell. Prop. L. Rev. 460, 465 (1993) (criticizing Federal Circuit's *Mallinckrodt* decision "as a remarkable change in the law, which may have remarkable consequences"). The scholarly commentary dovetails with the interests of industry in having predictable and stable business relationships that promote competitive markets.

The fact that the first sale doctrine has been held not to apply to restrictions imposed on a manufacturing licensee, *see United States v. Gen. Elec. Co.*, 272 U.S. 476 (1926) (resale price restriction); *General Talking Pictures Corp. v. Western Elec. Co.*, 305 U.S. 124 (1938) (field of use restriction), does not undercut the significance of the doctrine. Such an exception has been explained by the fact that a manufacturing licensee is equivalent to the patentee who can, of course, impose resale restrictions on itself. *See* Patterson,

supra, at 165 ("manufacturing licensees in effect stand in the shoes of the patentee, and imposing restrictions on them can reasonably be treated as economically equivalent to individual decisions by the patentee itself"). Purchasers who buy from the manufacturing licensee in knowing violation of the restriction *on the licensee* (i.e., who make unauthorized purchases) may be held liable for patent infringement, but, as Professor Patterson points out, "the Supreme Court has never upheld the use of a patent infringement action to enforce license restrictions on the ultimate purchasers of patented products." *Id.* Allowing infringement suits against knowing unauthorized purchasers of a manufacturing licensee is a relatively narrow and explicable exception to the first sale doctrine and hardly justifies abrogating its much broader application to commerce in general. Nor is the doctrine undercut by the fact that it only applies to sales, and not to licenses without the incidents of a sale (although the distinction may be difficult to make in some cases) because without the incidents of a sale the issue of free transferability of property embodying patented inventions does not arise.

This Court's decision in *United States v. Univis Lens Co.*, 316 U.S. 241 (1942) illustrates how the first sale doctrine complements the antitrust treatment of use restrictions. At issue in *Univis Lens* was an alleged antitrust violation arising from resale restrictions imposed by a manufacturer patentee. The manufacturer argued under the rule of *General Electric* it was engaged in a licensing transaction that

allowed it to impose the resale restrictions. The Court found that the transactions was a sale, and not a license, and therefore was outside the scope of the patent monopoly. The Court reasoned:

> [W]here one has sold an uncompleted article which, because it embodies essential features of his patented invention, is within the protection of his patent, and has destined the article to be finished by the purchaser in conformity to the patent, he has sold his invention so far as it is or may be embodied in that particular article. The reward he has demanded and received is for the article and the invention which it embodies and which his vendee is to practice upon it. He has thus parted with his right to assert the patent monopoly with respect to it and is no longer free to control the price at which it may be sold either in its unfinished or finished form.

Id. at 250-51.

In short, the first sale doctrine made the legal issue a pure question of how the contractual restriction would be treated under antitrust law. After *Leegin Creative Products, Inc. v. PSKS, Inc.*, 127 S. Ct. 2705 (2007), a restriction like the one at issue in *Univis* would be subject to the rule of reason and, as in *Univis*, patent law would be irrelevant to the antitrust analysis because the patent rights would have been exhausted.

C. The Transaction At Issue In This Case Is Subject To The First Sale Doctrine.

In the case at bar, respondent's licensee, to quote the language from *Univis Lens*, has sold an article that "embodies essential features" of the patented invention and "has destined the article to be finished by the purchaser in conformity to the patent." Respondent acquired a large patent portfolio of technologies used in the manufacture of computer chips. After a dispute with Intel, the chip manufacturer, respondent entered into a complex licensing agreement with Intel that allowed Intel to use the technology in the construction and sale of chips. These chips in turn were sold to petitioners and incorporated as components in computer hardware systems. Now, respondent seeks to enforce its patent rights against the petitioners based on their alleged violation of "conditions" placed on the original agreement with Intel.[3]

---

[3] The LG-Intel license agreement contained a proviso that no license was granted to any third party to combine the chips with non-Intel products, and that Intel was required to and did provide notice of this limitation to petitioners. *See LG Electronics, Inc. v. Bizcom Electronics, Inc.*, 453 F.3d 1364, 1368 (Fed. Cir. 2006). But the license agreement also stipulated that it would not "limit or alter the effect of patent exhaustion that otherwise would apply when" the chips were sold, the notice received by petitioners was apparently sent after many of the sales had already occurred, and the chips had no other reasonable use. *See* Brief for Petitioners 2, 8-9.

The first sale doctrine was designed to prohibit precisely this type of reach-through by the patent owner to enforce its patent rights. Under this Court's precedents, once the petitioners purchased products embodying essential features of the patented invention in an authorized sale, respondent's patent rights were exhausted. If the conditions placed in the license with Intel are consistent with contract law, antitrust law, and the patent misuse doctrine, then any violations can be enforced against Intel as contract claims (or possibly against the petitioners as third party contract claims), rather than patent infringement claims with the attendant remedies of injunctive relief, treble damages, and attorneys' fees. Such a result is consistent with the need for certainty and competitiveness of not only this market transaction, but also the wide ranges of market transactions that rest on intellectual property.[4]

---

[4] In *eBay Inc. v. Mercexchange, L.L.C.*, 126 S. Ct. 1837 (2006), a plurality of the Court was concerned about the development of an industry "in which firms use patents not as a basis for producing and selling goods but, instead, primarily for obtaining licensing fees", and the potentially harmful effects of injunctive relief "[w]hen the patented invention is but a small component of the product the companies seek to produce . . . ." *Id.* at 1842 (Kennedy, J., concurring). The first sale doctrine plays a role in preventing similar market disruption, as here, when a non-manufacturing patentee seeks to control the manufacture of end products in which the patented item is but a small component.

II. THE CONDITIONAL SALE DOCTRINE IS INCONSISTENT WITH THIS COURT'S PRECEDENT AND THE POLICIES OF THE FIRST SALE DOCTRINE.

The Federal Circuit's ruling in favor of respondent rests on an application of the "conditional sale doctrine," a rule created by the Federal Circuit that all but eliminates the first sale doctrine. The conditional sale doctrine, however, is based on a faulty reading of this Court's precedent. Although this Court has stated an unconditional sale is sufficient for the invocation of the first sale doctrine in a patent infringement suit, the Federal Circuit has inferred that a conditional sale is sufficient to eliminate the first sale doctrine as a defense. This inference does not logically follow from the case law and, more critically, contradicts the role of the first sale doctrine in ensuring the certainty of transactions and the competitiveness of markets.

A. The Federal Circuit's Conditional Sale Doctrine Eviscerates The First Sale Doctrine.

The conditional sale doctrine was first articulated by the Federal Circuit in *Mallinckrodt v. Medipart*, 976 F.2d 700 (Fed. Cir. 1992). That case dealt with a limitation imposed by the patent owner on reuse of a patented medical device sold to hospitals. The hospitals distributed the used devices to the defendant who refurbished them and sold them back to the hospitals for reuse. Mallinckrodt, the patent

owner, sued the refurbisher for inducing patent infringement by allowing the hospital to violate the restriction on reuse. The district court dismissed the claim, holding that the restriction on reuse constituted patent misuse and that the refurbishment constituted a non-infringing repair. The Federal Circuit reversed, holding that the restriction was not patent misuse and reversed the grant of summary judgment in favor of the refurbisher.[5]

In finding for the patent owner in *Mallinckrodt,* the Federal Circuit concluded that "[i]f the sale . . . was validly conditioned under the applicable law such as the law governing sales and licenses, and if the restriction on reuse was within the scope of the patent grant or otherwise justified, then violation of the restriction may be remedied by action for patent infringement." *Id.* at 709. The Federal Circuit considered this Court's precedent on the first sale doctrine but concluded that

---

[5] The patent holder advanced the kind of justification (product safety and product liability risks) that may have provided a basis for a valid post-sale restraint under contract and antitrust law. Indeed, the Federal Circuit referred to the decisions in *Continental T.V., Inc. v. GTE Sylvania, Inc.*, 433 U.S. 36 (1977) and *Tripoli Co. v. Wella Corp.*, 425 F.2d 932 (3rd Cir. 1970) (en banc), to justify its conclusion that the imposition of such a restraint was not patent misuse and should be lawful. *See Mallinckrodt*, 976 F.2d at 706-08. But the court erred in reasoning that because the patentee may not be liable under antitrust law, it therefore was entitled to sue for patent infringement. Moreover, the conditional sale test it adopted undermines proper antitrust analysis, as discussed *infra*.

> *Adams v. Burke* and its kindred cases do not stand for the proposition that no restriction or condition may be placed upon the sale of a patented article. It was error for the district court to derive that proposition from the precedent. Unless the condition violates some other law or policy (in the patent field, notably the misuse or antitrust law, *e.g.*, *United States v. Univis Lens Co.*, 316 U.S. 241 (1942)), private parties retain the freedom to contract concerning conditions of sale.

Id. at 708.

Five years later, the Federal Circuit reviewed use restrictions once again in *B. Braun Medical, Inc. v. Abbott Laboratories*, 124 F.3d 1419 (Fed. Cir. 1997), in which the patent owner was seeking to enforce a use restriction against a purchaser through a patent infringement claim. In its decision for the patent owner, the Federal Circuit explicitly stated that a conditional sale is not subject to the first sale doctrine.

> As a general matter, we explained [in *Mallinckrodt*] that an unconditional sale of a patented device exhausts the patentee's right to control the purchaser's use of the device thereafter. The theory behind this rule is that in such a transaction, the patentee has bargained for, and received, an amount equal to the full value of the goods. This exhaustion doctrine, however, does not apply to an expressly conditional sale or license. In such a transaction, it is more reasonable to infer

> that the parties negotiated a price that reflects only the value of the "use" rights conferred by the patentee. As a result, express conditions accompanying the sale or license of a patented product are generally upheld.

Id. at 1426 (internal citations omitted). The validity of use restrictions are judged, according to the Federal Circuit, under "antitrust, patent, contract, and any other applicable law, as well as equitable considerations such as patent misuse," and violations of valid conditions are remedied by either a claim for patent infringement or for contract breach. *Id.* The Federal Circuit stated in *Braun* that this general framework applied to all use restrictions and reversed the district court for issuing jury instructions that restrictions on resale were *per se* patent misuse.

In this case, the Federal Circuit applied the general framework developed in *Mallinckrodt* and refined in *Braun* to a use restriction enforced as a patent infringement claim against a third party purchaser. *LG Electronics, Inc. v. Bizcom Electronics, Inc.*, 453 F.3d 1364 (Fed. Cir. 2006). While in both *Mallinckrodt* and *Braun* the patent owner was enforcing its patent rights against the direct purchaser (either through an action for inducement, as in *Mallinckrodt*, or a direct claim, as in *Braun*), in this case the patent owner was reaching through to purchasers from Intel, the direct licensee of the patented invention, to enforce a condition that LG requested Intel to impose on petitioners. The Federal Circuit concluded that this condition was enforceable against the purchasers from

Intel because the "exhaustion doctrine . . . does not apply to an expressly conditional sale or license," citing *Braun*. *Id.* at 1369-70. Within the general framework established in *Braun*, if the use restriction was not invalid under applicable law or under equitable principles like misuse, it was enforceable as patent infringement.

B. The Federal Circuit's Reasoning Is Faulty.

The development of the conditional sale doctrine from *Mallinckrodt* to *LG Electronics* illustrates the expanding reach of the patent owner to enjoin the activities of companies in the downstream manufacturing chain as patent infringement. Once it is recognized that a patent owner can condition a transfer of patented technology and that this condition prevents the exhaustion of the patent owner's rights, then the patent owner logically has the ability to bring patent infringement claims against anyone who takes from the first purchaser and violates the contractual condition. However, under this Court's precedents, the patent owner cannot "engraft" rights onto the scope of its patent grant through reasonable contract terms. While some of the Court's precedents do speak in terms of unconditional sales, there is no suggestion that a conditional sale would abrogate the first sale

doctrine.[6] The Court's precedents recognize the rights of the patent owner and purchasers to engage in contractual bargaining and to include terms on the use of the patented invention as part of the bargain. But the Federal Circuit reads from this freedom of contracting, a right of the patent owner to expand the scope of its *patent rights* to limit the activities of downstream purchasers and users. It is this conclusion, and its potential disruptive effects on commerce, that this Court should correct.[7]

---

[6] Indeed, some of early precedents involved sales that were subject to conditions in the sense that the Federal Circuit uses the term. *See* Patterson, *supra*, at 168 & n.54. *Mitchell v. Hawley*, 83 U.S. 544 (1873), does not support the conditional sale doctrine. The Court in *Hawley* affirmed the principle articulated later in the same year by *Burke* that "when [patentees] have made one or more of the things patented, and have vended the same to others to be used, they have parted to that extent with their exclusive right, as they are never entitled to but one royalty for a patented machine . . . ." *Hawley*, 83 U.S. at 546. At issue was the right of a purchaser/licensee of a patented machine to continue using the machine when the original patent term was extended. The conclusion that the purchaser had to renegotiate the right to continue using the patented machine followed from the narrow contractual rights that had passed to the manufacturer. The Court in *Hawley* was not abrogating or limiting the first sale doctrine in any way but rather was acknowledging the power of the patent owner and the manufacturer to define what constitutes an authorized sale.

[7] The Federal Circuit also affirmed the district court's holding that the exhaustion doctrine does not apply to method claims, relying on *Bandag, Inc. v. Al Bolser's Tire Stores, Inc.* 750 F.2d 903 (Fed. Cir. 1984) and *Glass Equip. Dev., Inc. v. Besten, Inc.*, 174 F.3d 1337 (Fed. Cir. 1999). This ruling is

(Continued on following page)

C. The Conditional Sale Doctrine Conflicts With The Procompetitive Policies Of The First Sale Doctrine.

While the Federal Circuit's own precedents acknowledge the first sale doctrine,[8] the conditional sale doctrine creates a loophole that allows a patent owner to prevent its patent rights from becoming exhausted. Under the terms of the conditional sale doctrine, a patent owner can avoid the implications of the first sale doctrine by imposing a condition in the transfer of a patented invention for consideration, such as "Do not use on Sunday." As the patented invention is further transferred through the stream of commerce, any subsequent purchaser will take subject to the condition. If a subsequent purchaser does use the invention on a Sunday, the original patent owner has a suit for patent infringement against the purchaser, with the possible remedies of a permanent injunction, treble damages, and attorneys' fees. And this threat of potential liability for patent infringement would provide the basis for the patent owner to

---

erroneous. These two cases are best read as dealing with the issue of implied license, rather than the doctrine of exhaustion.

[8] *See, e.g., Jazz Photo Corp. v. International Trade Comm'n*, 264 F.3d 1105 (Fed. Cir. 2001) ("[T]he unrestricted sale of a patented article, by or with the authority of the patentee, 'exhausts' the patentee's right to control further sale and use of that article by enforcing the patent under which it was first sold."); *Intel Corp. v. ULSI Sys. Tech., Inc.*, 995 F.2d 1566, 1568 (Fed. Cir. 1993) ("The law is well settled that an authorized sale of a patented product places that product beyond the reach of the patent.").

renegotiate the restriction with each subsequent purchaser for additional consideration. Under the application of the first sale doctrine, however, the patent owner would have at best a contract claim for violation of the condition by the first purchaser, with a remedy generally limited to actual damages, and no claims against subsequent purchasers with whom there was no privity of contract or a third-party contractual relationship, and the restriction could be challenged as an antitrust violation like any vertical restraint engaged in by the seller of a nonpatented product.

The conditional sale doctrine plainly creates uncertainty for downstream purchasers and users, which the first sale doctrine is designed to avoid. The Federal Circuit relies on commercial law principles to allow sales to be conditioned, but its application of those principles seemingly would allow sales to be conditioned *after* the original purchase. *See* Patterson, *supra*, at 148 (citing cases). For example, in this case, the Federal Circuit relies upon U.C.C. §2-202, which the Court reads to allow contracts "to be supplemented by consistent additional terms unless the writing is intended to be complete and exclusive," to explain how the patent owner can condition the first sale. *LG Electronics*, 453 F.3d at 1370. This implies that the patent owner has the power to add conditions anytime after the first sale simply by providing notice. Admittedly, the Federal Circuit does find some limitation on the power to condition if the purchaser objects to the conditions within a

reasonable time. *See Mallinckrodt*, 976 F.2d at 708 n.7 ("a license notice may become a term of sale, even if not part of the original transaction, if not objected to within a reasonable time") (citing U.C.C. §2-207(2)(c)). But even with such a limitation, this power to amend the terms of sales adds considerable uncertainty to transactions among downstream purchasers. *See* Patterson, *supra* at 185-90 (criticizing courts' contract analysis). Moreover, as petitioners and others have pointed out, infringement actions may be brought against downstream purchasers even without notice of the conditions, as property theory allows. *See* Brief for Petitioners 48; Patterson, *supra*, at 209 ("U.S. courts take the view, derived from the Federal Circuit, that when a use restriction is violated, no valid license of the patent right exists. Consequently, the infringement suit against the downstream purchaser is equivalent to one against the purchaser of an illegally manufactured product, and knowledge of infringement is not central to patent law.").

The effect of the conditional sales doctrine on competitive markets is even more troubling in light of the Federal Circuit's unduly solicitous treatment of patent rights under antitrust law, and the prospect that the conditional sale doctrine may effectively immunize restraints from antitrust scrutiny. To be sure, the Federal Circuit has suggested that conditions in sale transactions are subject to review under antitrust (and other applicable law). In reviewing these conditions, the Federal Circuit stated, "The

appropriate criterion is whether [the] restriction is reasonably within the patent grant, or whether the patentee has ventured beyond the patent grant and into behavior having an anticompetitive effect not justifiable under the rule of reason." *Mallinckrodt*, 976 F.2d at 708. However, asking whether a condition is "reasonably within the patent grant" is not the same question as asking whether a restraint outside the patent grant (because of exhaustion) violates the antitrust laws. *See id.* (whether restriction is reasonably within the patent grant depends on whether "it relates to subject matter within the scope of the patent claims"); Patterson, *supra*, at 170 (test under *Mallinkrodt* has come to "mean that the defendant's activity in some way involves the patented invention" which "effectively removes any limitations on field-of-use licensing"). In general, the Federal Circuit has taken an expansive view of what conduct is within the patent grant even when it has potential anticompetitive effects. *See, e.g., In re Independent Service Organizations Antitrust Litigation*, 203 F.3d 1322, 1327-28 (Fed. Cir. 2000) (holding that "even though his refusal to sell or license his patented invention may have an anticompetitive effect," it is within the patent grant and immune from antitrust liability "[i]n the absence of any indication of illegal tying, fraud in the Patent and Trademark Office, or sham litigation"). Moreover, the Federal Circuit has taken the position that patent rights have special protection under antitrust law. Thus, for example, the Federal Circuit has stated, "Determination of whether the patentee meets the Sherman Act elements of monopolization or

attempt to monopolize is governed by the rules of application of the antitrust laws to market participants, with due consideration to the exclusivity that inheres in the patent grant." *Abbott Laboratories v. Brennan*, 952 F.2d 1346, 1354-55 (Fed. Cir. 1991). This "due consideration" means that once it is determined that conduct is "within the patent grant" under the conditional sale doctrine, the patent owner's exclusivity is given significant (if not dispositive) weight. In contrast, as noted above, if the patentee has exhausted its patent rights under the first sale doctrine, restrictions on downstream use are analyzed under ordinary antitrust principles.[9]

---

[9] We note that use restrictions can provide a contractual means to supplement intellectual property of certain readily appropriated technologies that involve sales, without the necessity of altering the first use doctrine. For example, in cases such as the Federal Circuit's decision in *Monsanto Co. v. Scruggs*, 459 F.3d 1328 (Fed. Cir. 2006), which dealt with genetically modified seeds, a technology that is self-replicating and therefore readily misappropriated (like software), reasonable contractual restrictions consistent with patent law may be necessary. The policy issues raised by the specific technology in *Scruggs* do not, however, affect our arguments against the conditional sale doctrine. For a discussion of contractual restrictions in agribusiness, see Peter Carstensen, *Post-Sale Restraints via Patent Licensing: A "Seedcentric" Perspective*, 16 Fordham Intell. Prop. Media & Ent. L. J. 1053 (2006) (analyzing post-sale restrictions in agri-business to prevent self-replication) and Patterson, *supra*, at 213-25 (identifying potential use of use restrictions to limit free riding on self-replicating products). Reasonable restrictions on the use of self-replicating technologies, such as seeds or software, should be recognized as a legitimate use of contract to enforce intellectual property rights that do not give

(Continued on following page)

Finally, by turning a matter of contract and commercial law into an issue of patent infringement, the Federal Circuit has expanded its own jurisdiction over patent claims to federalize commercial and contract law. This intrusion of the Federal Circuit's jurisdiction into ordinary business transactions not only adds to the uncertainty of contractual negotiations involving technology, but also arguably expands the reach of the court's jurisdiction beyond the intent of Congress. *See Holmes Group, Inc. v. Vornado Air Circulation Systems, Inc.*, 535 U.S. 826, 829 (2002) ("[T]he Federal Circuit's jurisdiction is fixed with reference to that of the district court, and turns on whether the action arises under federal patent law.").

CONCLUSION

This case arrives before the Court in the line of recent cases in which the Court has corrected overexpansive readings of patent rights by the Federal Circuit that impair competition and innovation. *See, e.g., eBay Inc. v. Mercexchange, L.L.C.*, 126 S. Ct. 1837 (2006); *KSR International Co. v. Teleflex Inc.*, 127 S. Ct. 1727 (2007). The Court's recent patent jurisprudence has been important for lower courts in shaping their scrutiny of substantive patent law and

---

rise to patent infringement claims if violated. If, in some contexts, contractual restrictions prove to be infeasible, it should be up to Congress to define appropriate exceptions to the well-settled first use doctrine. *See id.* at 224-25.

remedies. *See, e.g., z4 Technologies, Inc. v. Microsoft Corp.*, 434 F. Supp. 2d 437 (E.D. Tex. 2006). In reviewing the Federal Circuit's conditional sale doctrine, this Court has the opportunity to continue correcting the expansive direction of patent law. By limiting a doctrine as fundamental as the first sale doctrine, the conditional sale doctrine allows a patent owner to upset a delicate balance between property and contract rights by allowing a patent owner to bring patent infringement actions against potentially anyone in the chain of manufacture and distribution. We urge the Court to restore the balance provided through the first sale doctrine by reversing the judgment of the court of appeals and abrogating the conditional sale doctrine.

Respectfully submitted,

SHUBHA GHOSH
Professor of Law
SMU DEDMAN SCHOOL OF LAW
3315 Daniel Ave.
Dallas, Texas 75205
(214) 768-2598

ALBERT A. FOER
Counsel of Record
RICHARD M. BRUNELL
AMERICAN ANTITRUST INSTITUTE
2919 Ellicott St., N.W.
Washington, D.C. 20008
(202) 276-6002

5652 E
45 pgs

29

No. 06-937

IN THE

Supreme Court of the United States

QUANTA COMPUTER, INC. *et al.*,

Petitioners,

—v.—

LG ELECTRONICS, INC.,

Respondent.

ON WRIT OF CERTIORARI TO THE UNITED STATES COURT OF APPEALS FOR THE FEDERAL CIRCUIT

BRIEF OF AMERICAN INTELLECTUAL PROPERTY LAW ASSOCIATION AS *AMICUS CURIAE* IN SUPPORT OF RESPONDENT

JAMES POOLEY
President
AMERICAN INTELLECTUAL PROPERTY LAW ASSOCIATION
241 Eighteenth Street, South
Arlington, Virginia 22202
(703) 415-0780

JEFFREY I. D. LEWIS
Counsel of Record
PATTERSON BELKNAP WEBB & TYLER LLP
1133 Avenue of the Americas
New York, New York 10036
(212) 336-2000

Counsel for American Intellectual Property Law Association

TABLE OF CONTENTS

Interest of Amicus Curiae 1

Summary of Argument 2

Argument 11

1. Review of the Law 12

I. Patent Rights 12

A. Patent Licenses 13

i. Implied License 14

ii. Patent Exhaustion - First Sale 16

II. Contributory Patent Infringement and the 1952 Patent Act 18

A. Contributory Infringement 18

B. Patent Misuse 22

III. The Government's Position in *McFarling* 27

2. Application of Law to This Case 31

I. Negative Effects of a Blanket Exhaustion Doctrine 31

II. This Court Should Continue to Protect the Legal Doctrines at Issue 34

A. Pre-License Sales 35

B. Post-License Sales 36

Conclusion 36

TABLE OF AUTHORITIES

CASES

Adams v. Burke,
84 U.S. 453 (1873) 12, 13, 16

Am. Securit Co. v. Shatterproof Glass Corp.,
268 F.2d 769 (3d Cir. 1959) 10

AMP Inc. v. United States,
389 F.2d 448 (1968) 15

American Indus. Fastener Corp. v. Flushing Enters., Inc.,362 F. Supp. 32 (N.D. Ohio 1973) 9

Arizona Cartridge Remanufacturers Assoc. v. LexMark Int'l Inc.,
421 F.3d 981 (9th Cir. 2005) 20

Armstrong v. Motorola, Inc.,
374 F.2d 764 (7th Cir. 1967) 9

Atari Games Corp. v. Nintendo of America, Inc.,
897 F.2d 1572 (Fed. Cir. 1990) 4

B.B. Chem. Co. v. Ellis,
314 U.S. 495 (1942) 22

Bement v. Nat'l Harrow Co.,
186 U.S. 70 (1902) 30

Bloomer v. McQuewan,
55 U.S. 539 (1852) 12

Carborundum Co. v. Molten Metal Equip. Innovations, Inc.,
72 F.3d 872 (Fed. Cir. 1995) 15

Carl Schenck, A.G. v. Nortran Corp.,
713 F.2d 782 (Fed. Cir. 1983) 12

Continental Paper Bag Co. v. Eastern Paper Bag Co., 210 U.S. 405 (1908) ..... *passim*

C.R. Bard, Inc. v. M3 Systems, Inc.,
157 F.3d 1340 (Fed. Cir. 1998) 28

Dawson Chem. Co. v. Rohm and Haas Co.,
448 U.S. 176 (1980) ..... *passim*

De Forest Radio Tel. Co. v. United States,
273 U.S. 236 (1927) 13, 14, 15

Dickerson v. Colgrove,
100 U.S. 578 (1880) 15

Duplan Corp. v. Deering Milliken, Inc.,
444 F. Supp. 648 (D.S.C. 1977),
aff'd, 594 F.2d 979 (4th Cir. 1979) 10

eBay Inc.v. MercExchange, L.L.C.,
__U.S.__, 126 S. Ct. 1837 (2006) 13

General Talking Pictures Corp. v. Western Elec. Co., 305 U.S. 124 (1938) 13

Goss v. Henry McCleary Co.,
92 F.2d 444 (9th Cir. 1937) 15

Hartford-Empire Co. v. United States,
323 U.S. 386 (1945) 29

Henry v. A.B. Dick Co.,
224 U.S. 1 (1912) 9

Hobbie v. Jennison,
149 U.S. 355 (1893) 13

Illinois Tool Works Inc. v. Indep. Ink, Inc.,
547 U.S. 28 (2006) ..... *passim*

Int'l Mfg. Co. v. Landon,
336 F.2d 723 (9th Cir. 1964) 10

Keeler v. Standard Folding Bed Co.,
157 U.S. 659 (1895) 14, 16, 17

Kieruff v. Metro. Stevedore Co.,
315 F.2d 839 (9th Cir. 1963) 15

LG Elecs., Inc. v. Asustek Computer, Inc.,
Nos. C01-00326 CW et al., 2002 WL
31996860 (N.D. Cal. Aug. 20, 2002) 7

LG Elecs., Inc. v. Asustek Computer, Inc.,
248 F. Supp. 2d 912 (N.D. Cal. 2003) 7, 36

LG Elecs., Inc. v. Bizcom Electrics, Inc.,
453 F.3d 1364 (Fed. Cir. 2006) 6

Lear, Inc. v. Adkins,
395 U.S. 653, (1969) 10

Lisle v. Edwards,
777 F.2d 693 (Fed. Cir. 1985) 16, 17

Mercoid Corp. v. Mid-Continent Inv. Co.,
320 U.S. 661 (1944) 24, 25

Mercoid Corp. v. Minneapolis-Honeywell Regulator Co.,
320 U.S. 680 (1944) 24, 25

Minnesota Mining & Mfg. Co. v. E.I. du Pont de Nemours & Co.,
448 F.2d 54 (7th Cir. 1971) 15

Mitchell v. Hawley,
83 U.S. 544 (1873) 16

Monsanto Co. v. McFarling,
363 F.3d 1336 (Fed. Cir. 2004) 27

Motion Picture Patents Co. v. Universal Film Mfg. Co., 243 U.S. 502 (1917) 9

Pennock v. Dialogue,
27 U.S. 1 (1829) 12

Special Eqm't Co. v. Coe,
324 U.S. 370 (1945) 13, 31

St. Joseph Iron Works v. Farmers Mfg. Co.,
106 F.2d 294 (4th Cir. 1939) 15

Stickle v. Heublein, Inc.,
716 F.2d 1550 (Fed. Cir. 1983) 15

United States v. Univis Lens Co.,
316 U.S. 241 (1942) ..... *passim*

U.S. Phillips Corp. v. Int'l Trade Comm'n,
424 F.3d 1179 (Fed. Cir. 2005) 10

Wang Labs., Inc. v. Mitsubishi Elecs. Am. Inc., 103 F.3d 1571 (Fed. Cir. 1997) 15

In re Yarn Processing Patent Validity Litig.,
541 F.2d 1127 (5th Cir. 1976) 20, 21, 34

Zenith Radio Corp. v. Hazeltine Research, Inc.,
395 U.S. 100 (1969) 12

CONSTITUTION AND STATUTES

U.S. Const. art. I, § 8 11

35 U.S.C. § 154(a)(1) 12, 28, 29

35 U.S.C. § 271(a) ..... *passim*

35 U.S.C. § 271(c) ..... *passim*

35 U.S.C. § 271(d) ..... *passim*

35 U.S.C. § 283 12

U.C.C. § 2-312 (2004) 8

MISCELLANEOUS

Contributory Infringement: Hearings on HR 3866 Before Subcomm. No. 4 of the H. Comm. on Judiciary, 80th Cong. (1949) 26

Contributory Infringement in Patents, Definition of Invention: Hearings Before Subcomm. on Patent, Trade-Marks and Copyrights of the H. Comm. on Judiciary, 80th Cong. (1948) 25, 26

P.M. Dunn, The Chamberlen Family (1560-1728) and Obstetric Forceps, 81 ARCH. DIS. CHILD FETAL NEONATAL ED. (1999) 11

Hearings on H.R. 3760, Subcomm. No. 3 H. Comm. on Judiciary 82d Cong., 1st Sess. (1951) 24

Brief for United States as Amicus Curiae Supporting Petitioners, McFarling v. Monsonto Co., No. 04-31 ..... 27, 28, 29, 30

Jean Tirole, *The Theory of Industrial Organization* (1988) 32

U.S. DEP'T OF JUSTICE & FED. TRADE COMM'N, ANTITRUST ENFORCEMENT AND INTELLECTUAL PROPERTY RIGHTS (2007) 21

U.S. DEP'T OF JUSTICE & FED. TRADE COMM'N, ANTITRUST GUIDELINES FOR THE LICENSING OF INTELLECTUAL PROPERTY (1995) ..... *passim*

INTEREST OF AMICUS CURIAE[1]

The American Intellectual Property Law Association (AIPLA) is a voluntary bar association of over 17,000 members who work daily with all manner of intellectual property, *e.g.*, patents, trademarks, copyrights and trade secrets, and the legal issues that they present. Members include attorneys in private and corporate practice as well as government service. AIPLA's membership is intimately involved with the legal and business issues underlying the development, commercialization and exploitation of intellectual property, including enforceability, antitrust, and licensing issues.

AIPLA members are often on both sides of any matter, representing both plaintiffs and defendants for litigation and both licensors and licensees for transactions. As part of its central mission, AIPLA

---

[1] The parties have consented to the filing of this brief. No counsel for a party authored this brief in whole or in part, and no counsel or party made a monetary contribution intended to fund the preparation or submission of this brief. No person other than *amicus curiae*, its members, or its counsel made a monetary contribution to its preparation or submission.

After reasonable investigation, AIPLA believes that no member of its Board or Amicus Committee who voted to prepare this brief on its behalf, or any attorney in the law firm or corporation of such a Board or committee member or attorney who aided in preparing this brief, represents a party with respect to this litigation. Some committee members or attorneys in their respective law firms or corporations may represent entities which have an interest in other matters which may be affected by the outcome of this litigation.

is dedicated to encouraging the healthy development of intellectual property law. Accordingly, AIPLA has a vital interest in the issues presented by this case, which will have a far-reaching impact on intellectual property rights and their exploitation.

SUMMARY OF ARGUMENT

AIPLA believes that a patentee may, with adequate notice, require separate licenses at various stages along the downstream chain of sophisticated purchasers and users of its patented invention. Not only does this create market efficiencies, but it also allows for the appropriate and proper exploitation of intellectual property rights. There is no *per se* anti-competitive effect in allowing licensors and licensees the freedom to create such agreements.

The parties and *Amici* have characterized the relationship between LG and Intel as essentially that of licensor and licensee. And while that is literally correct, and frames much of the analysis set forth below, AIPLA submits that it mischaracterizes a significant portion of the transaction at issue. More fundamentally, it skews the analysis and even the Question Presented to this Court for review by ignoring the real-world context of what occurred. Any decision must account for the Constitutional balance between the public's interest in accessing technology and promoting innovation. AIPLA believes that license obligations can require an agreed-upon allocation of burdens to obtain specific additional agreements as between sophisticated parties.

Generally speaking, infringement occurs when a party makes, uses or sells the invention claimed in a patent without authorization. 35 U.S.C. § 271. As

set forth more fully below, LG sued Intel both for direct infringement (35 U.S.C. § 271(a)) and contributory infringement (35 U.S.C. § 271(c)). Intel settled both claims with a set of agreements that have a different impact on each claim (these agreements include licenses and will be referred to in the singular as the "LG-Intel License" for convenience). By express terms, Intel received a license that immunizes its making, using and selling of components from literal infringement. But, for contributory infringement Intel's license is nothing more than a covenant not to sue Intel (only) for aiding its customers' infringement. It is through this prism that the transaction, and therefore the dispute, must be viewed.

Notably, the submissions in this case to date ignore the statutory segregation of patent infringement from antitrust and fail to highlight the areas of contributory infringement and patent misuse. *See* 35 U.S.C. § 271. There are three discrete yet integrated legal concepts at play here: (i) patent exhaustion (sometimes called first sale), (ii) implied license, and – based upon citations to this Court – (iii) price-fixing. The first two must be analyzed under the Patent Act and are directly addressed by many of the briefs before the Court; the third is an antitrust issue.

As for this third issue, all filers seemingly agree, at least implicitly, that this is not a case where antitrust analysis is warranted. Nevertheless, patent and antitrust laws are interrelated and both "share the common purpose of promoting innovation and enhancing consumer welfare." U.S. DEPARTMENT OF JUSTICE AND FEDERAL TRADE COMMISSION ANTITRUST GUIDELINES FOR THE LICENSING OF INTELLECTUAL

PROPERTY (1995)[2] (the "DOJ-FTC Antitrust IP Licensing Guidelines") § 1 (citing *Atari Games Corp. v. Nintendo of America, Inc.*, 897 F.2d 1572, 1576 (Fed. Cir. 1990)). AIPLA therefore submits this brief *amicus curiae*, in large part, to reinforce each legal doctrine and explain why they must remain independent since each serves its own necessary purpose.

AIPLA, however, demurs on the factual issues due to the limited public record. AIPLA understands that Intel was LG's direct, first-instance licensee but that the license required downstream users to obtain their own licenses from LG. The decisions below rely on the notice letter from Intel to its downstream customers (the so-called "OEMs," which for this brief include subsystem suppliers) purporting to inform them of this requirement (the "Intel Notice Letter"). AIPLA does not have sufficient information to evaluate the effectiveness of that notice nor to dispute or support the findings below on this point, so AIPLA will not comment on that issue (and does not believe it to be ripe for consideration by this Court).

Nonetheless, as a general matter AIPLA believes that where sufficient notice has been given, strong market efficiencies support allowing a licensor to establish royalty rates at more than one key point in the distribution chain. This can take into account many factors, including:

- Possible uses and differences in licensed inventions,
- Proper allocation of resources,

---

[2] http://www.usdoj.gov/atr/public/guidelines/0558.pdf.

- Incomplete knowledge by the first-instance licensee of how devices or components will be used by downstream purchasers,
- The actual structure of the transaction, and
- Sophistication of the parties in optimizing transactions.

The reality is that some items of manufacture, exemplified in this case by electronic components, can have different value – and therefore rationally command different royalties – based upon their use.

This becomes clearer when it is considered in a real-world context. In the biologic field an antibody can be used either as a diagnostic tool (lower royalty) or as a therapeutic for treating patients (higher royalty). It would be inefficient to charge the higher therapeutic royalty rate to the diagnostic market, and yet that is precisely the result that Petitioners' proposed doctrine in this case would demand. Similarly, the brief *Amicus Curiae* of Croplife International at 10-12, explains why limiting licensing arrangements, *e.g.*, those not requiring exhaustion, avoid "astronomical prices." *See also* brief *Amicus Curiae* of Biotechnology Industry Organization at 5-6.

These examples reinforce that allowing sophisticated parties to structure transactions with different royalties for different uses – without attempting to define all uses and royalty rates in the first-instance

license – is pro-competitive and creates increased market efficiencies.[3]

AIPLA accepts for purposes of this brief that there are two groups of patent claims implicated by the Intel-LG License, one group covering "components" (items manufactured by Intel) and the other covering "end-products" (methods or devices utilizing those components such as those made by the OEMs). AIPLA further understands that the Intel-LG License permits Intel to make, use and sell components and immunizes Intel for its role in supplying components used in multiple applications in the end-products (at least some uses of which are covered by separate patent claims).[4] What is at issue in this case is whether or not downstream OEMs are liable for infringement because they used these Intel components in their end-products.

AIPLA also understands that there are two relevant time periods when the OEMs purchased components from Intel: (1) prior to the LG-Intel License and (2) after the license and receipt of the Intel Notice Letter. Each period must be considered separately, keeping in mind that the Intel-LG License released Intel's customers retroactively "from liability

---

[3] *See* DOJ-FTC Antitrust IP Licensing Guidelines § 2, Ex. 1 (showing example where "charg[ing] different royalties for ... different uses" was likely procompetitive).

[4] One of the factual confusions AIPLA faces is the role of the so-called Microsoft License. *E.g., LG Elecs., Inc. v. Bizcom Elecs., Inc.*, 453 F.3d 1364, 1371 (Fed. Cir. 2006). For convenience, AIPLA addressed only the Intel-LG License to the extent necessary.

for any claim of patent infringement that arose prior to the effective date...." *LG Elecs., Inc. v. Asustek Computer, Inc.*, 248 F. Supp. 2d 912, 917 (N.D. Cal. 2003).

The courts below made much of the difference between a product patent claim (which covers the manufacture and general use of components as such) and a method claim (which covers a specific use of a component in the larger end-product). *E.g.*, 453 F.3d at 1370. For purposes of analyzing these legal doctrines, however, AIPLA sees little difference in their application by these facts: the component is being used for one of the intended, claimed methods. Thus, AIPLA does not subscribe to the distinction below (453 F.3d at 1370) applying the law differently to *these* method and product claims on the present facts.

Another point that the lower courts considered was whether or not there are substantial non-infringing uses for the Intel components, *i.e.*, are there uses that do not require additional licenses from LG? *E.g.*, *LG Elecs., Inc. v. Asustek Computer, Inc.*, Nos. C 01-00326 CW et al., 2002 WL 31996860, at *11-13 (N.D. Cal. Aug. 20, 2002). Although this issue might be relevant in some cases, such as an unconditional sale, AIPLA submits that it is a *red herring* in the context of this dispute. Intel, the OEMs and even LG are all sophisticated consumers and each knew the intended uses of the components (even if not the specifics) and that they were covered by LG's patents. (This is not a situation where the components have *only* one possible use each.) Each of the contracting parties knew there were limitations on any licenses to the components vis-à-vis any

use in end products, having engaged in these transactions with notice to this effect. Therefore, whether or not there are other uses is not relevant. Reasonable license terms, such as the allocation of responsibility to obtain licenses between sophisticated parties to a transaction, should not raise fears of exhaustion breaking the licensing chain. At issue here are not "off the shelf" items bought in a storefront transaction, where the details of sales contracts among up-stream merchants are unknown; in such situations the U.C.C. would apply and it is reasonable and appropriate for the patent rights to be exhausted since the consumer is a *bona fide* purchaser free of infringement risk.[5] The sophistication and transparency of the present transaction to all involved therefore renders the issue of non-infringing uses irrelevant for purposes of this case.

Finally, there are a number of factual issues that must be accounted for in synthesizing the cases relied upon by Petitioners and *Amici*, which render some arguments inapposite. For instance, this is not a situation where the patentee is trying to leverage

---

[5] By way of contrast, this case does not involve a sale governed by the Uniform Commercial Code, such as for an off-the-shelf commodity. Such sales carry a covenant of non-infringement:

> (3) Unless otherwise agreed a seller who is a merchant regularly dealing in goods of the kind warrants that the goods shall be delivered free of the rightful claim of any third person by way of infringement ...

U.C.C. § 2-312(3) (2004). A sale by the licensee subject to this covenant would force the licensee to limit any downstream patent liability by structuring any license to avoid infringement. It also allows *bona fide* purchasers the opportunity to buy goods without fear of suit.

control over unpatented components by sale of patented items;[6] here, the uses and devices are strictly within the scope of the patents-in-suit.

Principal among the misapplied cases is *United States v. Univis Lens Co.*, 316 U.S. 241 (1942), a case that is primarily focused on pricing and distribution controls (and has routinely been recognized as such[7]). It is also a case where there was only one use for the licensed product, as the Court noted the lens blank and finished lens were essentially the same for patent purposes. *Id.* at 248-49, 251. In *Univis* the patentee violated the Sherman Act by trying to enforce the patent beyond the scope of the grant, *i.e.*, to control pricing. In doing so, the pat-

---

[6] Such tying cases involve the use of a patented invention (such as a mechanism for playing motion pictures) to control the purchase or use of unpatented work pieces or related objects (like the rental of motion pictures). *See Motion Picture Patents Co. v. Universal Film Mfg. Co.*, 243 U.S. 502, 506-07 (1917). Thus, arguments that this case is a modern-day version of *Henry v. A.B. Dick Co.*, 224 U.S. 1 (1912), overruled by *Motion Picture Patents*, or that attempt a *per se* analysis for tying based upon older cases are misdirected. *See Illinois Tool Works Inc. v. Indep. Ink, Inc.*, 547 U.S. 28, 35 (2006) ("Over the years ... this Court's strong disapproval of tying arrangements has substantially diminished. Rather than relying on assumptions, in its more recent opinions the Court has required a showing of market power in the tying product.").

[7] *See Armstrong v. Motorola, Inc.*, 374 F.2d 764, 775 (7th Cir. 1967) (*Univis* "was a Sherman Act case in which the patentee had been using his patent to achieve resale price maintenance and therefore the case is not in point."); *American Indus. Fastener Corp. v. Flushing Enters., Inc.*, 362 F. Supp. 32, 36 (N.D. Ohio 1973) ("*Univis* ... involves price restrictions...."); *see also* DOJ-FTC Antitrust IP Licensing Guidelines § 5.2.

entee also prevented licensees from challenging the licensed patent, thereby further extending the grant.[8] Thus, a significant part of the scheme in *Univis* not only controlled pricing but also prevented patent challenges. While the *dicta* in *Univis* arguably relates to patent exhaustion, the holding does not rest on that doctrine nor should the case be extended to a post-1969 patent license dispute. This is not an instance where there is an allegation of price fixing; there is no attempt to control downstream users nor is there an attempt to mandate minimum price obligations.

---

[8] In *U.S. Phillips Corp. v. Int'l Trade Comm'n*, 424 F.3d 1179 (Fed. Cir. 2005), Judge Bryson explained how this Court changed that law:

> The effect of a nonexclusive license was different before the Supreme Court, in *Lear, Inc. v. Adkins*, 395 U.S. 653 ... (1969), abolished the patent doctrine of licensee estoppel. Before *Lear*, a nonexclusive license had a legal effect that made it more than a mere covenant by the licensee not to sue. Acceptance of the license barred the licensee from challenging the validity of the patent. Some of the early decisions regarding patent-to-patent tying arrangements appear to have been based, at least in part, on that feature of pre-*Lear* patent licenses. *See, e.g., Am. Securit Co. v. Shatterproof Glass Corp.*, 268 F.2d 769, 777 (3d Cir. 1959); *Int'l Mfg. Co. v. Landon*, 336 F.2d 723, 731 (9th Cir. 1964); *see also Duplan Corp. v. Deering Milliken, Inc.*, 444 F.Supp. 648, 699 (D.S.C. 1977), *aff'd in pertinent part*, 594 F.2d 979 (4th Cir. 1979). In the post-*Lear* era, the "acceptance" of a license has no such restrictive effect on the licensee's freedom.

424 F.3d at 1190 n.3 (emphasis supplied).

Accordingly, AIPLA submits this brief generally in support of Respondent on the Question Presented for these facts. AIPLA believes that a licensor may, with adequate notice, require separate licenses at various stages within the chain of downstream, sophisticated purchasers and users of its patented invention. Not only does this create market efficiencies, but it also allows for the appropriate and proper exploitation of intellectual property rights.

ARGUMENT

The United States Constitution, Art. I, Sec. 8, ¶8, authorizes Congress to "promote the Progress of Science and useful Arts, by securing for limited Times to Authors and Inventors the exclusive Right to their respective Writings and Discoveries." The resulting patent system has been widely characterized as a legal, limited monopoly which serves as an incentive to innovation and disclosure such that the public learns from the disclosure and may even improve upon it.[9] This balances the property interest of a patentee with the public's interest in a fair and legal market-

---

[9] Contrast the often-debated example of the infamous Chamberlen family, who kept their invention of the obstetric forceps secret for generations thereby maintaining their income based upon their successes in child delivery and reduced death-rates. *See* P.M. Dunn, *The Chamberlen Family (1560-1728) and Obstetric Forceps*, 81 ARCH. DIS. CHILD FETAL NEONATAL ED. 232-35 (1999), http://fn.bmjjournals.com/cgi/content/full/81/3/F232. Presumably, if patents had been available to reward and protect their invention, the Chamberlen family would have patented and publicly disclosed it, thereby putting the forceps into wider use to save more lives while still rewarding the inventors with financial gains.

place.[10] The role advanced by Petitioners, however, would upset that balance.

1. REVIEW OF THE LAW

I. Patent Rights

AIPLA begins its analysis with the basic mechanism for exploiting patent rights: the ability to exclude unauthorized users from using the innovation. The right to exclude is "[t]he heart of [a patentee's] legal monopoly," *Zenith Radio Corp. v. Hazeltine Research, Inc.*, 395 U.S. 100, 135 (1969), which "enable[s the patentee] to secure the financial rewards for his invention," *Univis*, 316 U.S. at 250. *See Pennock v. Dialogue*, 27 U.S. 1, 19 (1829) (patentee's right to exclude provides a "reasonable reward to inventors" for disclosing their inventions).[11]

As this Court stated in *Adams v. Burke*, 84 U.S. 453, 456 (1873), "[t]he right to manufacture, the right to sell, and the right to use are each substantive rights, and may be granted or conferred separately by the patentee." *See Continental Paper Bag*,

---

[10] *Carl Schenck, A.G. v. Nortran Corp.*, 713 F.2d 782, 786 n.3 (Fed. Cir. 1983) ("The antitrust laws, enacted long after the original patent laws, deal with appropriation of what should belong to others. A valid patent gives the public what it did not earlier have."); *Continental Paper Bag Co. v. Eastern Paper Bag Co.*, 210 U.S. 405, 424-25 (1908).

[11] 35 U.S.C. §§ 154(a)(1), 271, 283; *Bloomer v. McQuewan*, 55 U.S. 539, 549 (1852) ("The franchise which the patent grants, consists altogether in the right to exclude every one from making, using, or vending the thing patented, without the permission of the patentee. This is all [the patentee] obtains by the patent.").

210 U.S. at 423-24; *accord eBay Inc. v. MercExchange, L.L.C.*, __ U.S. __, 126 S. Ct. 1837, 1840-41 (2006); *see also Special Eqm't Co. v. Coe*, 324 U.S. 370, 376 (1945) ("[W]e think it plainly is legitimate to use a patent ... as a means of preventing appropriation by others of petitioner's more important complete invention which he is using ...."). The ability to sue and thereby exclude others is the patentee's right, *cf. Continental Paper Bag*, 210 U.S. at 430, such that a patent license is a mere waiver of the right to sue the licensee, *De Forest Radio Tel. Co. v. United States*, 273 U.S. 236, 242 (1927).

A. Patent Licenses

One way to exploit a patent is to make and sell the patented invention. Another is to license others to do so. A patentee's refusal to license the patent at all, however, does not constitute a "misuse or illegal extension of the patent right." 35 U.S.C. § 271(d)(4); *see* DOJ-FTC Antitrust IP Licensing Guidelines § 2.2. Similarly, a patentee that decides to license may limit the licensee to a particular defined field of use[12] or to sales in a particular region.[13] These are

---

[12] *See, e.g., General Talking Pictures Corp. v. Western Elec. Co.*, 305 U.S. 124, 126-27 (1938).

[13] A first-instance licensee is subject to a geographically-restricted license, but products that are then properly sold by the licensee can be moved out of the licensed area by the buyer so long as there is no contractual limitation. *See Adams v. Burke*, 84 U.S. 453, 455-57 (1873) (affirming dismissal of a patent suit against a customer of a licensee with a restricted territory; the customer had purchased the product within the territory and moved it outside of the territory); *Hobbie v. Jennison*, 149 U.S. 355, 361-63 (1893) (affirming dismissal of suit against

(footnote continued ...)

not improper actions, and can be procompetitive. *See* DOJ-FTC Antitrust IP Licensing Guidelines § 2.3 ("Field-of-use, territorial, and other limitations on intellectual property licenses may serve procompetitive ends by allowing the licensor to exploit its property as efficiently and effectively as possible.").

Typically, a license is stated explicitly in a document setting forth what rights are granted, *see De Forest*, 273 U.S. at 241, but it also can be created in other ways. Two examples are:

- implied license, an equitable doctrine that requires examining the totality of the circumstances; and
- first sale, also called patent exhaustion, which is a legal doctrine arising out of policy-imposed limitations on the rights granted by a patent that provides *bona fide* purchasers with a right to use and resell without fear of suit.

Both are relevant here.

i. Implied License

An implied license to a patent is a form of estoppel. It arises "by acquiescence, by conduct, by equitable estoppel (estoppel in pais), or by legal estop-

---

a geographically-restricted licensee who sold products within his territory knowing they were to be shipped and used in another licensee's territory); *Keeler v. Standard Folding Bed Co.*, 157 U.S. 659, 664-67 (1895) (reversing judgment against purchaser of products from licensee who transported them into another licensee's territory and offered them for sale there).

pel." *Wang Labs., Inc. v. Mitsubishi Elecs. Am. Inc.*, 103 F.3d 1571, 1580 (Fed. Cir. 1997); *accord Kieruff v. Metro. Stevedore Co.*, 315 F.2d 839, 842 (9th Cir. 1963); *see St. Joseph Iron Works v. Farmers Mfg. Co.*, 106 F.2d 294, 298 (4th Cir. 1939) (finding implied license to make patented article by agreement to modify production machinery); *Goss v. Henry McCleary Co.*, 92 F.2d 444, 444-45 (9th Cir. 1937) (contract to modify machines to practice patented process granted implied license to practice process subsequent to a necessary rebuilding of the machine); *see also Dickerson v. Colgrove*, 100 U.S. 578, 580 (1880) ("[H]e who by his language or conduct leads another to do what he would not otherwise have done, shall not subject such person to loss or injury by disappointing the expectations upon which he acted.").

An implied license arises from the entire context of a transaction, particularly the patent owner's conduct, and not just from the unilateral expectations of a party. *Carborundum Co. v. Molten Metal Equip. Innovations, Inc.*, 72 F.3d 872, 878 (Fed. Cir. 1995); *Stickle v. Heublein, Inc.*, 716 F.2d 1550 (Fed. Cir. 1983) (citing *De Forest*, 273 U.S. at 236, 241); *AMP Inc. v. United States*, 389 F.2d 448, 451 n.3 (1968) (patent owner's "motive does not have any probative weight"). Moreover, since it is equitable in nature, the implied license may extend to patents not literally involved in a transaction. *E.g., Minnesota Mining & Mfg. Co. v. E.I. du Pont de Nemours & Co.*, 448 F.2d 54, 57-58 (7th Cir. 1971) (addressing undisclosed dominant patent application that later issues as patent).

ii. Patent Exhaustion - First Sale

Patent exhaustion is a legal doctrine, whereby certain transactions entered into by the patentee exhaust or terminate any patent rights in the item purchased based upon the unfettered transfer of an authorized item. *See Lisle v. Edwards*, 777 F.2d 693, 695 (Fed. Cir. 1985) (sale of tool is complete relinquishment even allowing repackaging without need of a sublicense). It is, in effect, a complete license to all subsequent purchasers.

The sale of a patented article in the absence of contractual restraints on the purchaser terminates – or exhausts – the patent right to exclude:

> Where the patentee has not parted, by assignment, with any of his original rights, but chooses himself to make and vend a patented article of manufacture, it is obvious that a purchaser can use the article in any part of the United States, and, ***unless restrained by contract with the patentee***, can sell or dispose of the same. It has passed outside of the monopoly, and is no longer under the peculiar protection granted to patented rights.

Keeler v. Standard Folding Bed Co., 157 U.S. 659, 661 (1895) (emphasis supplied); *see Mitchell v. Hawley*, 83 U.S. 544, 547 (1873) (a patentee who sells or authorizes a sale "*without any conditions* ... must be understood to have parted to that extent with all his exclusive right ... in the patented machine..." (emphasis supplied)); *Adams*, 84 U.S. at 456 (following a sale by "the patentee or his assignee having in the

act of sale *received all the royalty or consideration which he claims* for the use of his invention in that particular machine or instrument, it is open to the use of the purchaser without further restriction on account of the monopoly of the patentees" (emphasis supplied)); *Cf. Lisle*, 777 F.2d at 695 (licensed sales).

Unlike implied license, patent exhaustion arises solely by the actions of the patentee or those in privity with him; it does not require detrimental reliance on the part of another, nor does it even inquire into the buyer's state of mind. *See Keeler*, 157 U.S. at 666.

Patent exhaustion allows free commerce of patented articles, without the excessive "regulation" caused by patent owners imposing restrictions on downstream uses and sales, unless the buyer has agreed to them. Its serves the goal of eliminating uncertainty once a product is bought; sound policy endorses transactions being free of further obligation unless there is an agreement to the contrary. On the other hand, if there is an agreement that limits its use, such as a geographic restriction or field of use (see notes 12-13, *supra*), then that limitation, assuming proper notice to subsequent purchasers, is followed. In this way, informed and sophisticated buyers may reach a commercially favorable arrangement that includes restrictions, while *bona fide* purchasers – such as consumers buying off the shelf – can purchase items without fear of suit. (*See* note 5, *supra*.) It also eliminates the possibility that remote purchasers, having purchased patented goods without notice or appreciation of any restraints, will be unfairly restricted in their ability to use or resell patented products.

II. Contributory Patent Infringement and the 1952 Patent Act

Notably, most briefs so far filed have failed to discuss contributory patent infringement as well as its interaction with doctrines such as patent misuse. That, however, is the prism for understanding the Intel-LG transaction and for understanding (as well as dismissing) many of the pre-1952 citations relied on by Petitioners and *Amici*.

A. Contributory Infringement

Contributory infringement is defined by 35 U.S.C. § 271(c). It occurs when there is an unauthorized sale of "a component of a patented machine ... or apparatus for use in practicing a patented process, **constituting a material part of the invention**" that is especially made for that use and is not a staple article of commerce. *Id.* (emphasis supplied).

This doctrine can easily be understood by varying the instant facts for a hypothetical:[14] If there were no license between LG and Intel, then Intel could be charged as a direct infringer (35 U.S.C. § 271(a)) for patent claims covering the components themselves. Since Intel's components only constitute a portion of each end-product, however, Intel could not be charged as a direct infringer of the end-product or methods-of-use claims; nonetheless, Intel could be charged as a contributory infringer of those patent

---

[14] For simplicity, this hypothetical assumes all activities are domestic.

claims if its components are essential, non-staple portions of the end-products.[15]

The LG-Intel License in the present case, however, immunizes Intel from an allegation of contributory infringement. It is this same license that gives rise to the exhaustion arguments, but in making that argument Petitioners and their supporters rely on antitrust case law that mostly precedes enactment of § 271(c). That enactment and its legislation history are vital to the analysis of the infringement and patent misuse doctrines.

This Court in *Dawson Chemical Co. v. Rohm and Haas Co.*, 448 U.S. 176 (1980), noted that "emerg[ing] from [a] review of judicial development is a fairly complicated picture, in which the rights and obligations of patentees as against contributory infringers has varied over time." *Id.* at 197; *see id.* at 204 (balancing contributory infringement and patent misuse). Based upon this review, the Court clarified that § 271(d) immunizes certain sale and licensing requirements from charges of patent misuse, and "permits patentees to exercise control over non-staple articles used in their inventions" by being able to assert contributory infringement. *Dawson*, 448 U.S. at 200.

---

[15] Although some *Amici* have compared the instant factual scenario to tying, in many ways this case is "anti-tying." Here, the issue is not that a license to one set of rights requires taking a license to additional rights. Instead, the Intel-LG license covers less than it could have. It is, in fact, a separation of rights requiring further downstream licenses, such that the tying/bundling analysis is inappropriate.

The Fifth Circuit's *In re Yarn Processing Patent Validity Litigation* decision, 541 F.2d 1127 (5th Cir. 1976), also considered the balance between any extension of the patent monopoly to additional products and the scope of patent protection. It did so in the context of contributory infringement, understanding that the scope of a license can and should take infringement into account. As the Fifth Circuit concluded, "the restrictions on sale were within the scope of the patent grant because they ... did no more than to prevent contributory infringement by resale to unlicensed users." *Id.* at 1135. The patentee in that case, Leesona, could appropriately require licenses to "throwsters" at various vertical stages.

> There is no real question that under the terms of the machinery manufacturing licenses, the manufacturers were not allowed to sell to a throwster not licensed by Leesona. We fail to see how this is an illegal extension of the patent monopoly. The patents are assumed to be valid. Leesona had the right to license the use of the machinery separately from its manufacture and sale.

Id.; *see also Arizona Cartridge Remanufacturers Assoc. v. LexMark Int'l Inc.*, 421 F.3d 981, 986-88 (9th Cir. 2005).

On the facts of this case, it appears that the so-called license to Intel operates, in fact, as a non-

assertion clause (also called a covenant not to sue).[16] Intel will not be sued for contributory infringement but Intel's customers – Petitioners – must seek their own licenses from LG. (The only difference between this case and *Yarn Processing* appears to be the insignificant *Yarn Processing* requirement that sales be only to licensees as opposed to the LG-Intel License's silence as to purchasers.) As the Government noted in its report Antitrust Enforcement and Intellectual Property Rights: Promoting Innovation and Competition,[17] at pp. 88-89:

> [N]on-assertion clauses serve one of the same functions as a license or cross license, *i.e.*, they permit the contracting parties to avoid costly litigation over the use of an IP right.

For that reason, the Government concluded that such non-assertion agreements and other variations of standard licensing "either will not raise any competitive concerns or that the efficiencies of these types of agreements will be sufficient to alleviate competitive concerns." *Id.* at 99 (listing factors to consider).

---

[16] There are, of course, differences between licenses (which require mutual consideration) and covenants not to sue (which can be unilateral) that are not material to the instant analysis but should be recognized.

[17] U.S. DEP'T OF JUSTICE & FED. TRADE COMM'N, ANTITRUST ENFORCEMENT AND INTELLECTUAL PROPERTY RIGHTS (2007), available at www.usdoj.gov/atr/public/hearings/ip/222655.pdf.

B. Patent Misuse

Nothing in the instant facts suggests that the patentee has overreached. The parties are sophisticated transactors in patents and licenses, and Congress has recognized the importance of immunizing certain patent-related controls and transactions from a charge of patent misuse. Nonetheless, misuse has been injected into this case at least conceptually.

Historically, accused infringers asserted patent misuse as an affirmative defense to infringement based upon license terms. The gravamen of the misuse allegation was inappropriate exploitation of a patent beyond its legal bounds.[18] In many ways, this is similar to the exhaustion claim asserted here – the limiting of exploitation.

In 1952, however, the patent laws were amended to add 35 U.S.C. § 271(d), which narrowed the equitable doctrine of misuse. Section § 271(d) reads, in its entirety:

> **No patent owner** otherwise entitled to relief for infringement or contributory infringement of a patent **shall be denied relief or deemed guilty of misuse or illegal extension**

---

[18] For instance, in a pre-1952 case, *B.B. Chem. Co. v. Ellis*, 314 U.S. 495, 495-98 (1942), patent misuse barred relief for infringement even where the infringement had been actively induced by the defendant. The Court said that practical difficulties in marketing a patented invention could not justify patent misuse. *See Dawson*, 448 U.S. at 193-94, n.12 (summarizing *B.B. Chem.*).

> of the patent right by reason of his having done one or more of the following:
>
> (1) derived revenue from acts which if performed by another without his consent would constitute contributory infringement of the patent;
>
> (2) licensed or authorized another to perform acts which if performed without his consent would constitute contributory infringement of the patent;
>
> (3) sought to enforce his patent rights against infringement or contributory infringement;
>
> (4) refused to license or use any rights to the patent; or
>
> (5) conditioned the license of any rights to the patent or the sale of the patented product on the acquisition of a license to rights in another patent or purchase of a separate product, unless, in view of the circumstances, the patent owner has market power in the relevant market for the patent or patented product on which the license or sale is conditioned.

35 U.S.C. § 271(d) (emphasis supplied).[19]

---

[19] The charging language and subparagraphs 1 to 3 were enacted in 1952. Subparagraphs 4 and 5 were added by amendment in 1988 in response to the "migrat[ion]" of concepts from patent law to antitrust law. *See Illinois Tool Works Inc. v. Indep. Ink, Inc.*, 547 U.S. 28, 38 (2006). Congress therefore amended § 271(d) to exclude some conduct from attack and un-

(footnote continued ...)

As this Court has noted, the legislative history "strongly reinforce[d] the conclusion that § 271(d) was designed to immunize" patentees from charges of patent misuse and antitrust violations based upon licensing conditions. *Dawson*, 448 U.S. at 204. "[T]he relevant legislative materials abundantly demonstrate an intent both to change the law and to expand significantly the ability of patentees to protect their rights against contributory infringement." *Id.* at 203; *see* Hearings on H.R. 3760 before Subcomm. No. 3 of the H. Comm. on the Judiciary, 82d Cong., 1st Sess., 161 (1951) (1951 Hearings) (testimony of Giles S. Rich).[20]

The statute was designed to prevent patent misuse and the antitrust laws from eclipsing the doctrine of contributory infringement while Congressionally overruling this Court's two 1944 *Mercoid* decisions: *Mercoid Corp. v. Mid-Continent Inv. Co.*, 320 U.S. 661 (1944) ("*Mercoid I*") and *Mercoid Corp. v. Minneapolis-Honeywell Regulator Co.*, 320 U.S. 680 (1944) ("*Mercoid II*"). *See Illinois Tool Works*, 547 U.S. at 41; *Dawson*, 448 U.S. at 213.

The *Mercoid* cases had effectively abolished the doctrine of contributory infringement. They held

---

ravel the doctrines of antitrust and patent law from each other. *Id.* at 42.

[20] The Government's Brief supporting the *Petition for Certiorari*, at 20 n.7, simply states that § 271(d) is inapplicable because this case concerns patent exhaustion instead of misuse or contributory infringement. For the reasons noted above, this is an oversimplification of the balance created by these legal doctrines, as can be seen from the 1952 Act and its legislative history.

that the sale of non-patented goods could not be tied to a patented combination, even where the goods were not staple articles of commerce but had been manufactured solely to assist purchasers in directly infringing the claims of the patent. In such cases, patent enforcement for contributory infringement represented *per se* misuse (*Mercoid I*) and provided the predicate for an antitrust violation (*Mercoid II*). *See Dawson*, 448 U.S. at 204-05.

The Government "vigorously opposed" enacting § 271(d). *Id.* at 204. Its position was that the proposed enforcement of patents to prevent contributory infringement would create an exemption to the antitrust laws. As the proponents told the Committee, however, the bill:

- "strikes a proper balance between the field of patent law on the one hand and the field of general law in which antitrust laws operate on the other hand." 1948 Hearings[21] at 11 (statement of Giles S. Rich, representing NYPLA).
- "will eliminate a lot of headaches and a lot of alleged violations of the antitrust laws" 1949 Hearings[22] at 30 (statement of Giles S. Rich, representing NYPLA).

---

[21] Contributory Infringement in Patents, Definition of Invention: Hearings Before Subcomm. on Pat., Trade-Marks, and Copyrights of the H. Comm. on the Judiciary, 80th Cong. (1948) ("1948 Hearings").

[22] Contributory Infringement: Hearings on H.R. 3866 before Subcomm. No. 4 of the H. Comm. on the Judiciary, 80th Cong. (1949) ("1949 Hearings").

- "will be a help not only to the patentee but to the Antitrust Department because in this branch of patent law at least it draws as distinct a law as you can in language.... [I]t shows the Department of Justice whom they aught to prosecute and shows the patentee what he may safely do to enforce the rights that the Government has given him." 1948 Hearings at 16 (statement of Robert W. Byerly, Chairman, Comn. on Pat., Ass'n of the Bar of the City of New York).

- "draws a sharp line of demarcation between the patent law and the antitrust law. This will enable patentees to protect their property without inadvertent violation of the Sherman Act, and will also simplify the work of the Department of Justice by defining a field in which restraint of trade cannot be justified under the patent law." 1948 Hearings at 19-20 (statement of Ass'n of the Bar of the City of New York).

Ultimately, Congress rejected the Government's opposition and enacted § 271(d).

In *Dawson*, this Court expressly recognized that, although the "policy of free competition runs deep in our law," "the policy of stimulating invention that underlies the entire patent system runs no less deep." 448 U.S. at 221. There was no need to determine "whether the principles of free competition could justify" the potential reduction of the incentive to invent by complete eradication of the contributory

infringement doctrine. *Id.* at 223. The reason for this was because "Congress' enactment of § 271(d) resolved these issues in favor of a broader scope of patent protection." *Id.*

III. The Government's Position in *McFarling*

In this case, the Government seemingly is seeking a rule that would prevent patentees from ever controlling downstream uses or licenses outside of contract law. *Brief for the United States as Amicus Curiae Supporting Petitioners*, at pp. 7, 9, 24, 28-30. This is at odds with what it recently advocated. The *Petition for Certiorari* in *McFarling v. Monsanto Co.*, No. 04-31, and more particularly the Government's brief opposing *Certiorari* there ("Gov't McFarling Br.")[23] are instructive (and AIPLA believes correct).

In that case, Monsanto's licensees sold certain modified, patented seed (called "Round-Up Ready") to farmers like McFarling with the express license to each farmer that any harvested seed ("second generation") would not be saved for replanting. *See Monsanto Co. v. McFarling*, 363 F.3d 1336 (Fed. Cir. 2004). Monsanto patents covered both initially purchased and second generation seed. Gov't McFarling Br. at 11-12. Notwithstanding his express agreement, McFarling saved harvested seed for replanting and, when sued for infringement, claimed patent exhaustion for the second generation seed as well as patent misuse and Sherman Act violations.

The Government opposed *certiorari* and told this Court that limiting the licensee to one-time use,

---

[23] http://www.usdoj.gov/atr/cases/f209200/209268.htm

thereby preventing McFarling from replanting harvested seed, "did not constitute misuse." Gov't McFarling Br. at 10 (conflating misuse with exhaustion).[24]

> In order to demonstrate patent misuse, however, petitioner was required to show that respondent's restrictions on the use of second-generation seeds "impermissibly broadened the scope of the patent grant." *C.R. Bard*, [*Inc. v. M3 Sys., Inc.*,] 157 F.3d [1340, 1372 (Fed. Cir. 1998)]. No such showing could be made here, because included within "the scope of the patent grant" is "the right to exclude others from ... using ... the invention." 35 U.S.C. 154(a)(1). As this case comes before the Court, respondent's refusal to license petitioner to plant second-generation (and hence patented) Roundup Ready seed merely constitutes an exercise of that statutory right, and thus cannot be patent misuse. *See* 35 U.S.C. 271(d).

Gov't McFarling Br. at 13-14.[25] The Government said that there was no improper tying in the Monsanto license requiring that there be no replanting:

> [P]etitioner's "tying" theory reduces to the notion that he is entitled to purchase re-

---

[24] Seemingly, the Government discusses misuse because any failure to recognize exhaustion, in the Government's view, would be misuse.

[25] In its brief, the Government does seemingly indicate a separate analysis because the invention, seeds, is self-replicating. Gov't McFarling Br. at 13-14.

spondent's patented invention without also honoring limits imposed on the use of the product in which that invention finds its useful, tangible expression. Petitioner points to no authority for that novel proposition, and for good reason: it is contrary both to the fundamental nature of the patent grant, which confers on the patentee the right to refuse to license its invention, *see* 35 U.S.C. 154(a)(1), 271(d),* and to the fundamental competitive concerns underlying antitrust laws.... The patent grant *itself* prohibits petitioner from saving and replanting patented seed without a license. Respondent's license restrictions thus do not constitute an unreasonable restraint of trade under Section 1 of the Sherman Act – just as they do not constitute patent misuse.

---

* Accord *Hartford-Empire Co. v. United States*, 323 U.S. 386, 432 (1945) ("A patent owner is not in the position of a quasi-trustee for the public or under any obligation to see that the public acquires the free right to use the invention. He has no obligation either to use it or to grant its use to others."); *Bement v. National Harrow Co.*, 186 U.S. 70, 90 (1902) ("[The patentee's] title is exclusive, and so clearly within the constitutional provisions in respect of private property that he is neither bound to use his discovery himself nor permit others to use it.").

Gov't McFarling Br. at 16-17 (some citations omitted).

More particularly, the Government also argued that a system which allows purchasers to plant sec-

ond-generation seed would not necessarily be economically beneficial; *i.e.*, the restrictions make economic sense.

> [R]espondent could charge a fee for allowing farmers to save and replant seed.... Moreover ... requiring respondent to issue such self-renewing licenses (with attendant monitoring costs) could create disincentives for seed manufacturers to produce Roundup Ready seed, with the result that the price of such seed could actually increase, net of the new fee charged by respondent under petitioner's proposed rule. The absence of any clear evidence that it would be procompetitive to require respondent to issue a license on petitioner's desired terms provides further support for the conclusion that petitioner cannot assert a valid Section 1 claim.

Id. at 18-19. This is consistent with the position the Government took in formulating the DOJ-FTC Antitrust IP Licensing Guidelines:

> A non-exclusive license of intellectual property that does not contain any restraints on the competitive conduct of the licensor or the licensee generally does not present antitrust concerns even if the parties to the license are in a horizontal relationship, because the non-exclusive license normally does not diminish competition that would occur in its absence.

DOJ-FTC Antitrust IP Licensing Guidelines § 4.1.2.

2. APPLICATION OF LAW TO THIS CASE

I. Negative Effects of a Blanket Exhaustion Doctrine

A *per se* exhaustion doctrine, like that espoused by Petitioners (or McFarling), fails to achieve the appropriate balance between public interest and marketplace efficiencies. It would create an overwhelming chill for technology transfer. If, for instance, a patented invention were useful in multiple technology areas, only one of which was practiced by the patentee, then under Petitioners' scheme the patentee would never license the invention for use in other fields for fear that exhaustion would allow cannibalization of its primary market. *See, e.g., Continental Paper Bag*, 210 U.S. at 423-25; *Special Eqm't*, 324 U.S. at 378-79.

Instead, the public interest is best served by allowing patentees to arrange commercially-appropriate licenses (based upon the sophistication of the transaction, for instance) that allow them to recoup their investments in an efficient manner and appropriately condition the sale of a patented article – which may, itself, be useful in a subsequent method – as part of a limited bundle of patent rights mandating downstream agreements.

For those reasons, AIPLA believes that allowing a patentee to collect royalties commensu rate with the value conferred by the invention from multiple entities, whether they are in a vertical chain of distributors or among horizontal manufacturers serving different end-users, gives sophisticated parties the flexibility to distribute the royalty burden appropri-

ately. This creates mutually-beneficial financial arrangements that ultimately promote competition and serve the marketplace.

The alternative is inefficient and unacceptable. If a patentee were required to recoup its entire investment of potential profit in the first license for sale, as advocated by Petitioners, first-instance licenses would be priced for the highest royalty-bearing use only – at best, weighted for the highest return based upon diversion. And if there were other uses that would yield lower royalties, then they could not be licensed for fear of exhaustion defeating the higher royalty return. *See* Jean Tirole, *The Theory of Industrial Organization*, 134, 141 (1988) (discussing arbitrage where pricing is different for different sectors or uses). This would obviously have an adverse effect on any market, but AIPLA submits it would be magnified for an emerging market where uses may not be fully known at the outset. Alternatively, allowing the royalty to be established at multiple levels in the distribution chain allows appropriate royalty allocation based upon the chosen use of the patented invention. This is the most efficient, and reasonable, financial scenario.

Petitioners would have this Court believe that contracts, and contract remedies, are an appropriate vehicle to achieve this result. Similarly, the Government stated that "the right to place such downstream restrictions should be resolved as a matter of contract, not patent law." Government Br. Supporting *Certiorari* at p. 18.

In fact, contract remedies are not helpful since they are often inadequate to accomplish the objectives because they require privity and because of the

ineffectiveness of administering multiple contracts each of which would be dependent upon the one above it. Patent laws allow the patent owner to enforce its rights against anyone in the distribution chain, subject only to doctrines like exhaustion and license, so there would still be an infringement remedy in the absence of agreements linking patentee to defendant/infringer. In fact, the most market-efficient standard is one that allows appropriate application of governing patent law.

Requiring patent owners to take their *entire* financial reward in the first transaction forces patent owners and licensees into transactions that are less efficient. Thus, the first licensee, subject to issues of contributory infringement or inducement of infringement, will be required to pay a royalty for all uses of the component regardless of whether, in a sub-market, there may be a royalty-bearing need. Instead, allowing direct negotiation between the patent owner and the user of the patented invention, the most important economic actor exploiting the patent, will be more efficient than trying to negotiate with the initial component manufacturer serving as a proxy for the downstream economics. (If transactional costs render sublicenses inefficient, a patentee can always allow rights to exhaust at first sale.)

It is against this framework that a right of patent exploitation, such as licensing, must be considered. There are, therefore, separate yet related concepts that must be analyzed.

II. This Court Should Continue to Protect the Legal Doctrines at Issue

Petitioners conceded in the court below that the patent owner "could have granted Intel only the right to sell Licensed Products to those customers who had obtained a separate license from LGE." Combined Petition for Panel Rehearing and Rehearing en banc of Defendants-Cross-Appellants at 7 (Fed. Cir. Jul. 21, 2006), 2006 WL 2351226. This is consistent with the Fifth Circuit's *Yarn Processing* decision, 541 F.2d at 1135 (discussed *supra* at 20-21).

As a starting point, this Court should reaffirm that position. It is consistent with *Univis*. There the relevant sales, made both by wholesalers to prescription retailers and by finishing retailers to consumers, were authorized sales. The restriction at issue in *Univis*, however, was the requirement that they be done at a mandatory price for a product that only had one use (as even the Government agreed, *see* DOJ-FTC Antitrust IP Licensing Guidelines § 5.2). In contrast, in this case there is no pricing condition or requirement.

Unlike *Univis*, nothing in the agreement at issue in this case in any way restrains competition. Here the accused infringers, Petitioners, are sophisticated manufacturers (OEMs) who are primary users of the patented invention. They are the most direct infringers of the patent at issue. Thus, it is neither unfair nor would it interfere with downstream product distribution, if they were required to separately license any patented invention. It appears that LG's licensing program is limited to principal implementers of the patented area. Its efforts are focused on,

for purposes of the patents-in-suit in this case, a potential contributory infringer (Intel) and direct infringers (the OEMs). Intel, in effect, received a covenant not to sue for contributory infringement; its components are now licensed to the extent direct infringers separately obtain a license, but Intel is free from threat of litigation.

For purposes of *Univis*, there appears to be a distinction in language between "unauthorized sales" and "conditional sales." AIPLA submits these distinctions are largely semantic. LG could just as easily achieve the same result by drafting its license to Intel prohibiting sales to unlicensed purchasers as what actually occurred, requiring purchasers to obtain a separate license. And to the extent some suggest that *Univis* should be read to state that LG would have preserved its rights to obtain royalties from Petitioners had its license to Intel been royalty-free, this option should be dismissed as irrational.

On the facts of this case, AIPLA respectfully submits that the issue of exhaustion and implied license should be decided as follows:

A. Pre-License Sales

AIPLA's understanding of the facts, based upon the limited record available, indicates that pre-license sales were released in the Intel-LG License. *See* 248 F. Supp. 2d at 917 (quoted *supra* at 6-7). *If* that is the case, then AIPLA sees this as a complete release and all claimed uses of the components are licensed to LG's patents.

B. Post-License Sales

As noted above, AIPLA is unable to say whether the Intel Notice Letter was sufficient to put purchasers on notice that they required additional licenses. *If* the Notice Letter is deemed sufficient, which is presumed for these purposes, then patent exhaustion should not apply. Petitioners, all sophisticated purchasers, would have had adequate notice that they required additional licenses to use the Intel components and purchased them with that understanding. Moreover, *if* the Notice Letter is deemed sufficient then based upon the circumstances as a whole there would be no reason to imply an equitable license.

CONCLUSION

The Court should decide this case in a manner that preserves the principles that have been developed for each doctrine. Exhaustion does not preclude an infringement action against a purchaser where the sale made clear that downstream licenses are not being granted but rather must be separately negotiated. Thus, when an accused infringer has clear notice before entering into any purchase of potential liability as an infringer, his actions should not be exculpated. The effect of any such restrictions or conditions imposed by the patent owner or its licensees is not violative of the antitrust laws.

Where these notice provisions are met, it should not matter whether the patent owner chose to maximize return by charging the parties at each level of supply an individualized royalty or by requiring a complete royalty payment from the first licensee (thereby exhausting patent rights). Whether the first transaction is a sale or license or covenant not

to sue, it should not change these conditions or render a sale unauthorized.

Respectfully submitted,

JAMES POOLEY
President
AMERICAN INTELLECTUAL
PROPERTY LAW ASSOCIATION
241 Eighteenth Street, South
Arlington, VA 22202
(703) 415-0780

JEFFREY I. D. LEWIS
Counsel of Record
PATTERSON BELKNAP WEBB &
TYLER LLP
1133 Avenue of the Americas
New York, NY 10036
(212) 336-2000

Counsel for American Intellectual Property Law Association

74 8766

(19)

31pg

No. 06-937

IN THE

Supreme Court of the United States

QUANTA COMPUTER, INC., *et al.*,
Petitioners,

v.

LG ELECTRONICS, INC.
Respondent.

On Writ of Certiorari to the United States Court of Appeals for the Federal Circuit

BRIEF AMICUS CURIAE OF THE AMERICAN SEED TRADE ASSOCIATION IN SUPPORT OF NEITHER PARTY

GARY JAY KUSHNER*
LORANE F. HEBERT
HOGAN & HARTSON L.L.P.
555 Thirteenth Street, N.W.
Washington, D.C. 20004
(202) 637-5856

*Counsel of Record

Counsel for Amicus Curiae

WILSON-EPES PRINTING CO., INC. – (202) 789-0096 – WASHINGTON, D. C. 20002

TABLE OF CONTENTS

	Page
TABLE OF AUTHORITIES	ii
STATEMENT OF INTEREST OF AMICUS CURIAE	1
SUMMARY OF ARGUMENT	3
ARGUMENT	5
I. SOUND PUBLIC POLICY FAVORS STRONG AND EFFECTIVE INTELLECTUAL PROPERTY PROTECTION FOR ENHANCED SEED TECHNOLOGY	5
A. Enhanced Seed Technology Benefits Farmers, Consumers, And The Environment	5
B. Substantial Resources Are Required To Develop New And Improved Seed Technology	11
C. Strong and Effective Intellectual Property Protection For Enhanced Seed Technology Encourages Research In And Development Of New And Improved Seed Technology	12
II. A SALE OF ENHANCED SEED CONDITIONED ON THE ACCEPTANCE OF A LICENSE RESTRICTING THE USE OF SECOND-GENERATION SEED DOES NOT IMPLICATE THE PATENT EXHAUSTION/FIRST SALE DOCTRINE	16

TABLE OF CONTENTS—Continued

Page

CONCLUSION 22

TABLE OF AUTHORITIES

	Page
Cases:	
Adams v. *Burke*, 84 U.S. 453 (1873)	19, 20
Aro Mfg. Co. v. *Convertible Top Replacement Co.*, 365 U.S. 336 (1961)	18
Diamond v. *Chakrabarty*, 447 U.S. 303 (1980)	13
Dowling v. *United States*, 473 U.S. 226 (1985)	21
E. Bement & Sons v. *National Harrow Co.*, 186 U.S. 70 (1902)	17
eBay Inc. v. *MercExchange, L.L.C.*, 126 S. Ct. 1837 (2006)	21
General Talking Pictures Corp. v. *Western Elec. Co.*, 305 U.S. 124 (1938)	17
Hewlett-Packard v. *Repeat-O-Type Stencil Mfg. Co.*, 123 F.3d 1445 (Fed. Cir. 1997), *cert. denied*, 523 U.S. 1022 (1998)	18
J.E.M. Ag Supply, Inc. v. *Pioneer Hi-Bred Int'l, Inc.*, 534 U.S. 124 (2001)	15
Jazz Photo Corp. v. *International Trade Comm'n*, 264 F.3d 1094 (Fed. Cir. 2001)	18
Mallinckrodt, Inc. v. *Medipart, Inc.*, 976 F.2d 700 (Fed. Cir. 1992)	18

TABLE OF AUTHORITIES—Continued

Page

Monsanto Co. v. *McFarling*, 363 F.3d 1336 (Fed. Cir. 2004), *cert. denied*, 545 U.S. 1139 (2005) 17, 18, 19

Monsanto Co. v. *McFarling*, 302 F.3d 1291 (Fed. Cir. 2002), *cert. denied*, 537 U.S. 1232 (2003) 4, 19

Monsanto Co. v. *Scruggs*, 249 F. Supp. 2d 746 (N.D. Miss. 2001) ... 12, 15, 16

Monsanto Co. v. *Scruggs*, 459 F.3d 1328 (Fed. Cir. 2006), *cert. denied*, 127 S. Ct. 2062 (2007) 20

Pfaff v. *Wells Elecs., Inc.*, 525 U.S. 55 (1998) 13

United States v. *General Elec. Co.*, 272 U.S. 476 (1926) 17, 20

United States v. *Univis Lens Co.*, 316 U.S. 241 (1942) 19, 20

Constitution:

U.S. Const., art. I, § 8, cl. 8 16

Statutes:

7 U.S.C. §§ 2321 *et seq* 14

7 U.S.C. § 2543 14

35 U.S.C. § 101 13

35 U.S.C. § 102 13

TABLE OF AUTHORITIES—Continued

Page

35 U.S.C. § 103 13

35 U.S.C. § 154(a)(1) 17

35 U.S.C. § 283 21

35 U.S.C. § 284 21

Rules:

Fed. R. Civ. P. 37.6 2

Legislative Materials:

H.R. Subcomm. on Basic Research of H.R. Comm. on Science, *Seeds of Opportunity: An Assessment of the Benefits, Safety, and Oversight of Plant Genomics and Agricultural Biotechnology*, Comm. Print 106-B (2000) 5, 6, 7, 11

Other Authorities:

Jorge Fernandez-Cornejo, Econ. Research Serv., U.S. Dep't of Agric., Agric. Information Bulletin No. 786, *The Seed Industry in U.S. Agriculture: An Exploration of Data and Info. on Crop Seed Markets, Regulation, Industry Structure, and Research and Development* (Feb. 2004), *available at* http://www.ers.usda.gov/publications/AIB 786 ..... 10, 11, 12

TABLE OF AUTHORITIES—Continued

Page

Jorge Fernandez-Cornejo, *et al.* Econ. Research Serv., U.S. Dep't of Agric., Agric. Economic Rep. No. 786, *Genetically Engineered Crops for Pest Management in U.S. Agriculture: Farm-Level Effects* (Apr. 2000), *available at* http://www.ers.usda.gov/publications/AER 786..... 7, 9

Jorge Fernandez-Cornejo, *et al.*, *Have Seed Industry Changes Affected Research Effort?*, Amber Waves Vol. 2 Issue 1 (Feb. 2004), *available at* http://www.ers.usda.gov/AmbeWaves/February04/Features /HaveSeed.htm 13

Counsel for Biotechnology Information, *Good Ideas Are Growing: Plant Biotechnology* (2003), *available at* whybiotech.com/html/pdf/GoodIdeas-96dpi.pdf.... 6, 7, 8

Thomas Jefferson, *Memorandum of Services, reprinted in* M.D. Peterson, *The Writings of Thomas Jefferson* (1984)..... 5

National Agric. Statistics Serv., U.S. Dep't of Agric., *Farms, Land in Farms, and Livestock Operations: 2006 Summary* (Feb. 2007), *available at* http://usda.mannlib. cornell. edu/usda/current/FarmLandIn/ FarmLandIn-02-02-2007.pdf..... 10

TABLE OF AUTHORITIES—Continued

Page

National Agric. Statistics Serv., U.S. Dep't of Agric., *Trends in U.S. Agriculture—Farm Numbers and Land in Farms* (Jan. 2001), *available at* http://www.usda. gov/nass/pubs/trends/farmnumbers.htm 10

Press Release, Iowa State Univ., College of Agric., *Consumers Benefit from Strong, Enforceable Intellectual Property Protection in Seed Industry, According to Iowa State Study* (Oct. 31, 2005), *available at* http://www.af.iastate.edu/aginfo/news/2005releases/ipstudy.hmtl.... 12

Sujatha Sankula, *et al.*, National Center for Food and Agricultural Policy, *Impacts on U.S. Agriculture of Biotechnology-Derived Crops Planted in 2003: An Update of 11 Case Studies* (Oct. 2004), *available at* www.ncfap.org/whatwedo/pdf/ExecSummary10-18-04.pdf..... 8

Sujatha Sankula, National Center for Food and Agricultural Policy, *Quantification of the Impacts on U.S. Agriculture of Biotechnology-Derived Crops Planted in 2005* (Nov. 2006), *available at* http://www.ncfap.org/whatwedo/biotech-us.php..... 8

TABLE OF AUTHORITIES—Continued

Page

Haley Stein, *Intellectual Property and Genetically Modified Seeds: The United States, Trade, and the Developing World*, 3 N.W. J. of Tech. & Intell. Prop. 160 (Spring 2005) 7, 11, 13

Brian D. Wright, Univ. of Cal., Div. of Agric. & Nat. Res., *Plant Engineering and Intellectual Property Protection*, Agric. Biotechnology in Cal. Series, Pub. 8186 (2006), *available at* http:// anrcatalog.ucdavis.edu/pdf/8186.pdf 13

IN THE

Supreme Court of the United States

No. 06-937

QUANTA COMPUTER, INC., *et al.*,

Petitioners,

v.

LG ELECTRONICS, INC.

Respondent.

On Writ of Certiorari to the United States Court of Appeals for the Federal Circuit

BRIEF AMICUS CURIAE OF THE AMERICAN SEED TRADE ASSOCIATION IN SUPPORT OF NEITHER PARTY

STATEMENT OF INTEREST OF AMICUS CURIAE

Founded in 1883, the American Seed Trade Association ("ASTA") is a voluntary, nonprofit national trade association representing approximately 855 members involved in seed production and distribution, plant breeding, and related industries in North America. As an authority on plant germplasm, ASTA monitors and takes positions on science and policy issues of industry-wide importance. Its mis-

sion is to enhance the development and free movement of quality seed worldwide.[1]

Many ASTA members are research-intensive companies engaged in the discovery, development, and marketing of enhanced seed—*i.e.*, seed that has been modified to express certain beneficial or desirable traits. These members annually invest millions of dollars in research and development of new seed varieties by both traditional breeding methods, such as hybridization, and newer methods involving advanced gene technology to produce new plant varieties and to make American agriculture more productive and the Nation's food supply more plentiful and nutritious. It is estimated that these ASTA members hold over one-third of the more than 1800 utility patents claiming plant-related subject matter that have been granted by the U.S. Patent & Trademark Office. More than 60% of ASTA's members are small seed companies with annual sales of $1 million or less. Many of these seed companies are licensed to incorporate patented seed technology developed by others into their own germplasm to produce enhanced seeds for sale.

ASTA and its members have a substantial interest in this case. Potentially on the chopping block is the Federal Circuit's decision in *Mallinckrodt, Inc.* v. *Medipart, Inc.*, 976 F.2d 700 (Fed. Cir. 1992), in which the Federal Circuit held that the patent exhaustion/first sale doctrine does not apply to a *conditional* sale—*i.e.*, one imposing restrictions on the use of the patented article sold. If this Court

---

[1] Pursuant to this Court's Rule 37.6, ASTA notes that no part of this brief was authored by counsel for any party. ASTA also notes that no party or counsel for a party made a monetary contribution intended to fund the preparation or submission of the brief, and that no person or entity other than ASTA or its members made such a monetary contribution. This brief is filed with the consent of all the parties.

were to reject *Mallinckrodt* and broadly hold that conditional sales run afoul of the patent exhaustion/first sale doctrine, its ruling could have serious and perhaps unintended adverse consequences.

Private seed patentees typically make their patented seed technology available through a limited license that prohibits the planting or selling of second-generation seed that is naturally produced through the use of the original, sold seed. Without such licenses, seed patentees would lose the ability to control and benefit from their patented inventions, as the original seed could be reproduced indefinitely and exponentially. Accordingly, if this Court holds that a patentee cannot preserve any of its exclusive rights through restrictions imposed on the use of a patented article that has been sold—even restrictions that do not deprive the purchaser of a reasonable use of the article—ASTA urges the Court, for reasons explained below, to make clear that restrictions on the use of an article produced by a patented article containing self-replicating technology, such as second-generation seed, do not implicate the patent exhaustion/first sale doctrine.

SUMMARY OF ARGUMENT

I. Enhanced seed technology has brought—and continues to promise to bring—a wealth of benefits to farmers, consumers, and the environment. Crops designed to carry insect-resistant and herbicide-tolerant traits, for example, have produced higher yields and higher net farm returns while significantly reducing pesticide use. These and other revolutionary plant improvements of the last decade or so are the result of considerable research and development efforts involving private investment of hundreds of millions of dollars each year. Future investments of this magnitude—and future developments in enhanced seed technology—are contingent upon strong and effective intellectual property

protection that ensures that seed patentees will be able to control and reap the benefits of their patented inventions.

Because of the self-replicating nature of seeds, private seed patentees must make their patented technology available through a limited license that prohibits the planting or selling of second-generation seed produced by the original, sold seed. If seed patentees were stripped of this ability to protect and enforce their exclusive patent rights with respect to second-generation seed, the consequences for the seed industry would be devastating. In the end, however, farmers and consumers would perhaps stand to lose the most. If seed patentees could not protect their patent rights through restrictions on the use of second-generation seed, they could no longer make their patented technology available at prices that most farmers could afford. Without a market for their product, private firms would cease to invest the substantial resources required to develop new and improved seed technology.

II. Sales conditioned on the acceptance of a license restricting the use of second-generation seed do not implicate the patent exhaustion/first sale doctrine. That doctrine is concerned with restrictions on the use of the patented article sold. Licensing restrictions on the use of second-generation seed do not restrict the use of the original seed—*i.e.*, the patented article sold. Rather, such restrictions merely protect the patentee's right to exclude others from using or selling the second-generation seed, which "had never been sold." *Monsanto Co.* v. *McFarling*, 302 F.3d 1291, 1299 (Fed. Cir. 2002). The fact that a purchaser of seed containing patented technology is authorized in some sense to make copies of the original seed does not mean that it is also authorized to use or sell the second-generation seed. It is a fundamental principle of

patent law that a patentee may choose to allow others to make but not use or sell its patented invention. Accordingly, in the event this Court holds that even a conditional sale fully exhausts a patentee's rights with respect to the patent article sold, the Court should make clear that restrictions on the use of an article produced by a patented article containing self-replicating technology, such as second-generation seed, do not implicate the patent exhaustion/first sale doctrine.

ARGUMENT

I. SOUND PUBLIC POLICY FAVORS STRONG AND EFFECTIVE INTELLECTUAL PROPERTY PROTECTION FOR ENHANCED SEED TECHNOLOGY.

A. Enhanced Seed Technology Benefits Farmers, Consumers, And The Environment.

Thomas Jefferson once wrote that "[t]he greatest service which can be rendered any country is to add a useful plant to its culture."[2] Throughout history, farmers and scientists have searched for ways to create and improve plants. Since time immemorial, farmers have attempted to improve crops through selective breeding—saving seeds from plants that produced the best crops and planting them the following season. More recently, plant breeders have developed and perfected cross-breeding methods, such as sexual hybridization, to create new crop varieties.[3]

---

[2] Thomas Jefferson, *Memorandum of Services, reprinted in* M.D. Peterson, *The Writings of Thomas Jefferson* 702-704 (1984).

[3] H.R. Subcomm. on Basic Research of H.R. Comm. on Science, *Seeds of Opportunity: An Assessment of the Benefits, Safety, and Oversight of Plant Genomics and Agricultural*

These two techniques—selective breeding and cross-breeding—have had a phenomenal impact on agriculture. Almost without exception, the commercial crops grown today have been genetically modified over time. Indeed, most important food crops "have been altered to such an extent that their wild ancestors are unrecognizable, and in some cases they are unknown altogether."[4] Modern corn, for instance, bears little resemblance to its early ancestor, teosinte, whose spindly little cobs measured only one to two inches long and boasted few kernels. Ancient varieties of potatoes and tomatoes were vastly different from their modern relatives—and barely edible, if at all. It was only after centuries of careful breeding that these crops were developed into the foods we know today.[5]

Although traditional cross-breeding is still employed to produce new plant varieties, the technique suffers from certain limitations. Traditional cross-breeding involves the transfer of many genes—some carrying desirable traits, some carrying not-so-desirable traits—to create a new plant variety. Producing a plant with the right combination of genes is a difficult and time-consuming process requiring repeated rounds of cross-breeding; bringing a crop to market can take up to 15 years or more. With the advent of modern biotechnology, scientists are now able to insert genes bearing certain beneficial or desirable traits directly into seed germplasm.[6] These recent advances—which allow scientists to

---

Biotechnology, Comm. Print 106-B, at 10, 14 (2000) ("*Seeds of Opportunity*").

[4] *Id.*

[5] Counsel for Biotechnology Information, *Good Ideas Are Growing: Plant Biotechnology* 2 (2003) ("*Good Ideas*"), *available at* whybiotech.com/html/pdf/GoodIdeas-96dpi.pdf.

[6] *Good Ideas* at 2; *Seeds of Opportunity* at 14.

transfer specific genes to a plant from a variety of sources—have been likened to the "discovery of fire."[7]

The first generation of enhanced crops in use in the United States today includes crops designed to resist insects and viruses and to tolerate certain broad-spectrum herbicides. "Bt" crops, for example, are genetically engineered to carry genes from *Bacillus thuringiensis* ("Bt"), a naturally-occurring soil bacterium that produces proteins toxic to some insects. Crops containing the Bt gene are able to produce those proteins, thereby creating resistance to certain insects. Bt corn, for example, is resistant to the European corn borer, a pernicious pest that costs U.S. corn growers over $1 billion each year.[8] Other crops have been modified to tolerate certain broad-spectrum herbicides used by farmers to control weeds. The most common herbicide-tolerant crop currently in use is a herbicide-tolerant soybean designed to tolerate glyphosate, a highly effective but indiscriminate herbicide. Other important crops like papaya and squash have been modified to protect themselves against viral infection in much the same way humans are protected from disease—through "inoculation" and the resultant building of a natural defense.[9]

---

[7] Haley Stein, *Intellectual Property and Genetically Modified Seeds: The United States, Trade, and the Developing World*, 3 N.W. J. of Tech. & Intell. Prop. 160, 169 (Spring 2005) ("*Intellectual Property and Genetically Modified Seeds*") (quotation omitted).

[8] Jorge Fernandez-Cornejo, *et al.* Econ. Research Serv., U.S. Dep't of Agric., Agric. Economic Rep. No. 786, *Genetically Engineered Crops for Pest Management in U.S. Agriculture: Farm-Level Effects* 2 (Apr. 2000) ("*Genetically Engineered Crops*"), *available at* http://www.ers.usda. gov/publications/AER 786; *Seeds of Opportunity* at 15.

[9] *Genetically Engineered Crops* at 2; *Good Ideas* at 3; *Seeds of Opportunity* at 15-16.

The use of these crops has had a "significant impact on U.S. agriculture."[10] One recent study of 11 enhanced crops planted in 2003 found that the use of such crops increased yields by 5.3 billion pounds, raised farm net income by $1.9 billion, and reduced pesticide use by 46.4 million pounds.[11] In addition to reduced pesticide use, the study found other significant environmental benefits, noting that the use of herbicide-tolerant crops led to an increase in "no-till" farming practices.[12] Such conservation practices—which leave soil virtually undisturbed from harvest to planting— minimize soil erosion and moisture loss and have been credited with creating better wildlife habitats and reducing greenhouse gases.[13] An updated study of 13 enhanced crops planted in 2005 found a continuing trend: yields increased by 8.3 billion pounds, farm returns rose by $2 billion, and pesticide use decreased by 69.7 million pounds.[14] The study concludes that "[t]he fact that adoption of biotechnology-derived crops has continued to grow each year since they were first introduced is a testimony to the ability of these crops to deliver tangible positive impacts and to the optimistic future they hold."[15]

---

[10] Sujatha Sankula, *et al.*, National Center for Food and Agricultural Policy, *Impacts on U.S. Agriculture of Biotechnology-Derived Crops Planted in 2003: An Update of 11 Case Studies*, Executive Summary 1 (Oct. 2004), *available at* www.ncfap.org/whatwedo/pdf/ExecSummary10-18-04.pdf.

[11] *Id.* at 5.

[12] *Id.* at 7.

[13] *Id.*; *Good Ideas* at 12.

[14] Sujatha Sankula, National Center for Food and Agricultural Policy, *Quantification of the Impacts on U.S. Agriculture of Biotechnology-Derived Crops Planted in 2005*, Executive Summary 2 (Nov. 2006), *available at* http://www.ncfap.org/whatwedo/biotech-us.php.

[15] *Id.* at 12.

A recent government report on the use of insect-resistant and herbicide-tolerant corn, soybeans, and cotton presented similar findings. The report found that the use of such crops generally led to higher yields, increased farm returns, and reduced pesticide use.[16] In particular, the report found that the use of Bt cotton led to "significantly reduced insecticide use" and that the use of herbicide-tolerant soybeans led to "significant decreases in herbicide use."[17] As the report explains, herbicide-tolerant crops "may require lower application rates or fewer herbicide applications," and "in many cases, [herbicide-tolerant] crops allow farmers to use more benign herbicides instead of more harmful ones."[18]

With the potential for increased yields, higher returns, and lower pest control costs, enhanced seed technology is an obvious boon to farmers. Indeed, one government report notes that

> farmers believe that the use of [enhanced] crops will offer them many benefits, such as higher yields, lower pest management costs, and greater cropping practice flexibility. While benefits and performance of these crops vary greatly by region because of pest infestation levels and other factors, the rapid adoption rates are evidence that, for many farmers, expected benefits outweigh expected costs.[19]

These many benefits carry over to consumers as well. Increased yields lead to lower prices. Decreased pesticide use reduces adverse impacts on public health. More fundamentally, enhanced crops

---

[16] *Genetically Engineered Crops* at 15-16.

[17] *Id.* at iii.

[18] *Id.* at 3.

[19] *Id.* at 18.

play a critical role in avoiding food shortages. As the U.S. population has grown, the Nation's supply of arable land has steadily decreased. In 1950, farm acreage totaled over 1.1 billion acres.[20] By 2004, farm acreage had shrunk to just over 900 million acres—a reduction of nearly 20%.[21] Yet despite this continuing decrease in arable land, "[o]ver the past 70 years, there has been a remarkable *increase* in the yields of *all* major field crops in the United States," and "*more than half* of [those] yield gains are attributed to genetic improvements achieved by plant breeders."[22]

The next generation of enhanced crops promises to produce an additional cornucopia of benefits for farmers and consumers. Environmental stresses such as extremes in temperatures and drought exact an enormous toll on crop production. It is estimated that 80 percent of a crop's genetic potential is lost to environmental stresses, which also limit where and when crops can be grown. Sudden or unexpected changes in weather conditions can have devastating effects as well; a major freezing spell in 1999 caused the California citrus industry a $600 million loss. Currently under development are various enhanced

---

[20] National Agric. Statistics Serv., U.S. Dep't of Agric., *Trends in U.S. Agriculture—Farm Numbers and Land in Farms* (Jan. 2001), *available at* http://www.usda.gov/nass/pubs/trends/farmnumbers.htm.

[21] National Agric. Statistics Serv., U.S. Dep't of Agric., *Farms, Land in Farms, and Livestock Operations: 2006 Summary* 2 (Feb. 2007), *available at* http://usda.mannlib.cornell.edu/usda/current/FarmLandIn/FarmLandIn-02-02-2007.pdf.

[22] Jorge Fernandez-Cornejo, Econ. Research Serv., U.S. Dep't of Agric., Agric. Information Bulletin No. 786, *The Seed Industry in U.S. Agriculture: An Exploration of Data and Information on Crop Seed Markets, Regulation, Industry Structure, and Research and Development* 5 (Feb. 2004) ("*The Seed Industry in U.S. Agriculture*"), *available at* http://www.ers.usda.gov/publications/AIB 786 (emphases added).

crops intended to withstand a range of harsh environmental conditions, such as drought-resistant and freeze-resistant crops. Assuming current levels of research and development, these crops should be commercially available in the not-too-distant future.[23]

B. Substantial Resources Are Required To Develop New And Improved Seed Technology.

Improved plant varieties are the product of considerable research and development ("R&D") efforts. For some time, plant breeding was "traditionally the domain of public sector investment."[24] In recent years, however, the private sector has assumed a leading role in the research in and development of new and improved seed technology. Private R&D expenditures have not only "increased dramatically in absolute levels," but have also "increased relative to public levels."[25] From 1960 to 1995, real private R&D expenditures increased by some $514 million—or 1300 percent—while real public R&D expenditures stayed flat.[26] The result has been a marked "shift of more R&D activity to the private sector."[27]

Individual private firms invest substantial resources each year in the research in and development of new enhanced seed technology. A recent government report notes that in 1996 some large

---

[23] *Seeds of Opportunity* at 30-31.

[24] *The Seed Industry in U.S. Agriculture* at 42 n.11.

[25] *Id.* at 41.

[26] *Id.* at vii, 42.

[27] *Id.* at 41. *See also Intellectual Property and Genetically Modified Seeds* at 176 ("Private firms now lead in research and development of [genetically engineered] seeds—a role once dominated by governments and international public institutions.").

firms spent between $122 and $133 million on R&D efforts.[28] Even a firm considered to be "a smaller player in the market" spent $37 million.[29] According to an ASTA internal survey, in 2005 a small subset of ASTA's members invested more than $554 million in research in and development of new seed technology. One ASTA member alone recently spent "several hundred million dollars" in developing patented seed technology that produces herbicide-tolerant and insect-resistant crops. *See Monsanto Co.* v. *Scruggs*, 249 F. Supp. 2d 746, 753 n.4 (N.D. Miss. 2001). Future advances in enhanced seed technology are dependent on this continued investment of resources.

C. Strong and Effective Intellectual Property Protection For Enhanced Seed Technology Encourages Research In And Development Of New And Improved Seed Technology.

If private firms could not control and benefit from the fruits of their labors, they would quickly cease to invest the substantial resources required to develop new and improved seed technology. Strong and effective intellectual property protection ensures that private companies will have the opportunity to recoup their R&D costs and make a return on their investments, and thus "encourage[s] private agricultural seed companies to invest in research and development that will bring new technologies to farmers around the world."[30] Indeed, it should come as no surprise that strong and effective intellectual

---

[28] *The Seed Industry in U.S. Agriculture*, at 47.

[29] *Id.*

[30] Press Release, Iowa State Univ., College of Agric., *Consumers Benefit from Strong, Enforceable Intellectual Property Protection in Seed Industry, According to Iowa State Study* (Oct. 31, 2005), *available at* http://www.af.iastate.edu/aginfo/ news/ 2005releases/ipstudy.hmtl.

property protection is widely credited for the dramatic growth of private investment in and the development of new and improved seed technology.[31]

Utility patents provide inventors of enhanced seed technology with an important source of intellectual property protection. To obtain a utility patent, a would-be patentee must demonstrate that its seed technology is new, useful, and non-obvious. 35 U.S.C. §§ 101-103. *See also Diamond* v. *Chakrabarty*, 447 U.S. 303 (1980) (holding that patentable subject matter includes plant life). If the would-be patentee satisfies those and other "stringent" requirements, *J.E.M. Ag Supply, Inc.* v. *Pioneer Hi-Bred Int'l, Inc.*, 534 U.S. 124, 142-143 (2001), it receives "an exclusive monopoly for a limited period of time" to make, sell, or use the patented technology. *Pfaff* v. *Wells Elecs., Inc.*, 525 U.S. 55, 63 (1998).

Because of the unique nature of enhanced seed technology, private seed patentees must make their patented technology available to farmers and other end-users through a limited license. Seed technology is self-replicating. A plant produced by an enhanced seed will produce copies of the original seed. Those copies in turn can be planted to produce additional copies of the original seed. Thus, enhanced seeds can be reproduced indefinitely, and at an exponential rate. *See Monsanto Co.* v. *Scruggs*, Nos. 04-1532, 05-1120, 05-1121 (Fed. Cir.), Brief of Appellee Monsanto

---

[31] Jorge Fernandez-Cornejo, *et al.*, *Have Seed Industry Changes Affected Research Effort?*, Amber Waves Vol. 2 Issue 1, at 17 (Feb. 2004), *available at* http://www.ers.usda.gov/AmberWaves/February04/Features/HaveSeed.htm; *Intellectual Property and Genetically Modified Seeds* at 160, 178; Brian D. Wright, Univ. of Cal., Div. of Agric. & Nat. Res., *Plant Genetic Engineering and Intellectual Property Protection*, Agric. Biotechnology in Cal. Series, Pub. 8186, at 3-5 (2006), *available at* http://anrcatalog.ucdavis.edu/pdf/8186.pdf.

Company at 7 (noting that one soybean plant grown from a single enhanced soybean seed can produce 36 or more identical soybean seeds containing the same enhanced seed technology).

Limited licenses typically allow farmers to use seed containing patented technology for the planting of a single commercial crop and prohibit farmers from 1) saving and planting seed produced from a crop containing patented technology, and 2) selling or supplying such seed to another person for replanting. Farmers obtain such a license by signing a technology license agreement and paying a licensing or "technology" fee. Bags of seed offered for sale bear a prominent label stating that a license is required before the seed may be used. Such licensing restrictions on the use of second-generation seed allow farmers to make substantial use of the original seed, as farmers are able to grow crops with the full benefit of the particular trait expressed by the seed, such as insect resistance or herbicide tolerance. And while farmers may not save and plant the second-generation seed, they may find other uses for the seed. Corn seeds, for example, may be used in feed; soybean seeds may be crushed for oil.

Such licensing restrictions are also a critical means of protecting a seed patentee's rights in its patented technology. Without them, seed patentees would lose the ability to control and reap the benefits of their patented inventions, and the utility patents which they obtained after considerable time, effort, and expense would be rendered worthless.[32] As one court explained in upholding such restrictions:

---

[32] Another source of important intellectual property protection for seed technology is the Plant Variety Protection Act ("PVPA"), 7 U.S.C. §§ 2321 *et seq.*, which offers limited patent-like protection for certain sexually reproduced plants. The PVPA contains an exemption that allows farmers to save seed produced from protected plants for replanting. *See id.* § 2543.

> Given the fact that the gene technology at issue is passed on to the subsequent generations of seed, Monsanto's restriction to the production of a single commercial crop is logically intended to protect its patent monopoly and to thereby permit it to capture revenue in the form of future sales of technology. Without the prohibition against the saving of seed for replanting and resale, Monsanto's patent would soon be rendered useless by virtue of the potential for exponential multiplication of the seed containing its patented technology. [*Scruggs*, 249 F. Supp. 2d at 753.]

If seed patentees lost the ability to restrict the use of second-generation seed—and thus the ability to protect and enforce their patent rights—the consequences would be devastating. Firms that have developed patented seed technology would immediately stand to lose hundreds of millions of dollars in revenues. In addition, hundreds of seed companies—whose entire livelihoods are based on the right to incorporate patented technology into their own germplasm to produce and sell seeds—would be at serious risk of going out of business.

But the negative impact of such an outcome would not be felt by the seed industry alone. By restricting the use of second-generation seed, seed patentees can make their patented technology available to farmers and other end-users at *reasonable* prices. If seed patentees could not recoup their R&D costs and earn

---

As this Court recognized in *J.E.M. Ag Supply, supra*—in which the Court held that the PVPA is not the exclusive source of intellectual property protection for sexually reproduced plants—"[u]tility patents issued for plants do not contain such [an] exemption[]." 534 U.S. at 129 n.1. *See also id.* at 143 ("there are no exemptions for * * * saving seed under a utility patent"). That is because "utility patent holders receive greater rights of exclusion" for having met "more stringent requirements." *Id.* at 143.

a return on their investment through repeat sales, they would have to attempt to do so through single transactions with customers. Yet the price of seed in such circumstances would likely be so prohibitively expensive that few farmers could afford to purchase it. Private firms would thus have little incentive to invest the substantial resources required to develop new and improved seed technology, much to the detriment of farmers and consumers. Indeed, that is just what one court prophesied:

> If the limited licensing mechanism were not available to Monsanto, it would * * * have to reap its reward on a fewer number of sales. By logical extension, Monsanto would have to adjust its pricing policy to reflect as much, possibly resulting in such a high price that few farmers could afford the cost of the seed and thereby rendering the technology unavailable to all but the most wealthy. With such a limited market for the technology, it is quite conceivable that it would be commercially infeasible for Monsanto to offer the benefits of its patented biotechnology at all. The result would be a loss to the farmers and a deterrent to future research by Monsanto. [*Id.* at 753-754 n.4.]

II. A SALE OF ENHANCED SEED CONDITIONED ON THE ACCEPTANCE OF A LICENSE RESTRICTING THE USE OF SECOND-GENERATION SEED DOES NOT IMPLICATE THE PATENT EXHAUSTION/FIRST SALE DOCTRINE.

Our Nation's founders recognized the importance of economic incentives for scientific development, granting Congress the authority to "promote the Progress of Science and Useful Arts, by securing for limited Times to Authors and Inventors the exclusive Right to their Respective Writings and Discoveries." U.S. Const., art. I, § 8, cl. 8. To that end, the patent

laws give inventors, for a limited duration, "the right to exclude others from making, using, offering for sale, or selling the invention." 35 U.S.C. § 154(a)(1).

This Court has long recognized that the "right to exclude" includes the right to grant a limited license to use a patented invention. Indeed, the Court has observed that "[t]he practice of granting licenses for a restricted use is an old one." *General Talking Pictures Corp.* v. *Western Elec. Co.*, 305 U.S. 124, 127 (1938). *See also United States* v. *General Electric Co.*, 272 U.S. 476, 490 (1926) ("The patentee may make and grant a license to another to make *and use* the patented articles but withhold his right to sell them.") (emphasis added). "[T]he rule is, with few exceptions, that any conditions which are not in their very nature illegal with regard to th[e] kind of property [at issue], imposed by the patentee and agreed to by the licensee for the right to manufacture *or use* or sell the [patented] article, will be upheld by the courts." *E. Bement & Sons* v. *National Harrow Co.*, 186 U.S. 70, 91 (1902) (emphasis added). So long as a condition is "reasonably within the reward which the patentee by grant of the patent is entitled to secure"—*i.e.*, that it relates to subject matter reasonably within the scope of the patent grant—a "patentee may grant a license upon [that] condition." *General Talking Pictures*, 305 U.S. at 127 (quotations omitted).

There is no question that licensing restrictions prohibiting the planting or sale of second-generation seed containing patented seed technology are reasonably within the scope of the patent grant for the seed technology. "The licensed and patented product (the first-generation seeds) and the good made by the licensed product (the second-generation seeds) are nearly identical copies." *Monsanto Co.* v. *McFarling*, 363 F.3d 1336, 1343 (Fed. Cir. 2004). Thus, a patent that "reads on the first-generation seeds * * * also

reads on the second-generation seeds." *Id.* Accordingly, "licensing restrictions on the use of goods produced by the licensed product are not beyond the scope of the patent grant," but are merely an "exercise of [the patentee's] right to exclude." *Id.* at 1342-43.

In *Mallinckrodt, supra*, the Federal Circuit held that a conditional sale of a patented article, like a restricted license to use a patented article, does not fully exhaust the patent holder's rights in the article. *See* 976 F.2d at 708. If this Court rejects *Mallinckrodt* and holds that a conditional sale of a patented article does not preserve any of the patentee's exclusive rights with respect to that article—even if the restriction at issue does not deprive the purchaser of a reasonable use of the article—the Court nevertheless should make clear that the sale of a patented article containing self-replicating technology does *not* exhaust the patentee's rights in any copies made by the patented article, such as second-generation seed.

It is well-settled that "[t]he authority to use and sell a purchased device * * * does not include the right to make a new device." *Hewlett-Packard* v. *Repeat-O-Type Stencil Mfg. Co.*, 123 F.3d 1445, 1451 (Fed. Cir. 1997) (citing *Aro Mfg. Co.* v. *Convertible Top Replacement Co.*, 365 U.S. 336, 346 (1960)). *See also Jazz Photo Corp.* v. *International Trade Comm'n*, 264 F.3d 1094, 1102 (Fed. Cir. 2001) ("the ownership of a patented article does not include the right to make a substantially new article"). Because seeds are self-replicating, a plant produced by an enhanced seed will naturally make a copy of the original seed. Licensing restrictions on the use of second-generation seed—the copies of the original, sold seed—merely protect the patentee's right to exclude others from using or selling the second-generation seed. Such restrictions do not implicate the patent exhaustion/first sale doctrine, "as the new

seeds grown from the original batch had never been sold." *McFarling*, 302 F.3d at 1299.

The patent exhaustion/first sale doctrine is based on the principle that in general "[a]n incident to the purchase of any article, whether patented or unpatented, is the right to use and sell it." *United States* v. *Univis Lens Co.*, 316 U.S. 241, 249 (1942). *See also Adams* v. *Burke*, 84 U.S. 453, 455 (1873) ("the sale by a person who has the full right to make, sell, and use * * * a machine carries with it the right to the use of that machine to the full extent to which it can be used in point of time"). That is so because "when the patentee, or the person having his rights, sells a machine or instrument whose sole value is in its use, he receives the consideration for its use and he parts with the right to restrict that use." *Adams*, 84 U.S. at 456. Thus, "the authorized sale of an article which is capable of use only in practicing the patent is a relinquishment of the patent monopoly *with respect to the article sold*." *Univis Lens Co.*, 316 U.S. at 249. (emphasis added). *See also id.* at 251 ("the purpose of the patent law is fulfilled with respect to any particular article when the patentee has received his reward for the use of his invention by the sale of the article, and * * * once that purpose is realized the patent law affords no basis for restraining the use and enjoyment of the thing sold").

Licensing restrictions on the use of second-generation seed do not restrict the use of the original seed—*i.e.*, "the article sold." *See McFarling*, 363 F.3d at 1342-43 (recognizing that seed licensing restrictions did "not impose a restriction on the use of the product purchased under license but rather impose[d] a restriction on the use of the goods made by the licensed product"). Thus, such restrictions do not deprive purchasers of "the only use to which [the original seed] could be put." *Univis Lens*, 316 U.S. at 249. To the contrary, such restrictions allow pur-

chasers to reap substantial benefits from the use of the original seed. *See supra* at 14.

Moreover, it cannot be said that a seed patentee "has received his reward for the use of [the second-generation seed] by the sale of the [original seed]." *Univis Lens Co.*, 316 U.S. at 251. As discussed, if seed patentees were to attempt to convey rights to use or sell second-generation (and successive generations of) seed, the price of the original seed would likely be so prohibitively expensive that few farmers could afford it. *See supra* at 15-16. Thus, the price of the original seed plainly reflects the value of the use rights sold—*i.e.*, the right to use *only* the original seed.

It is axiomatic that a patentee may choose to authorize others to make but not use or sell a patented invention. *See Adams*, 84 U.S. at 456 ("The right to manufacture, the right to sell, and the right to use are each substantive rights, and may be granted or conferred separately by the patentee."); *General Electric Co.*, 272 U.S. at 490 ("The patentee may make and grant a license to another to make and use the patented articles but withhold his right to sell them."). It is not uncommon, for example, for a patentee to license another to manufacture, but not use or sell, its patented invention. Thus, the fact that a purchaser of seed containing patented technology is authorized in some sense to "make" copies of the original seed does not mean that it is also authorized to use or sell those copies. *See Monsanto Co.* v. *Scruggs*, 459 F.3d 1328, 1336 (Fed. Cir. 2006) ("The fact that a patented technology can replicate itself does not give a purchaser the right to use replicated copies of the technology.").

Licensing restrictions on the use of second-generation seed should thus be recognized as a legitimate means of protecting a patentee's rights in

such seed.[33] Indeed, even petitioners would not appear to quibble with that proposition. *See* Cert. Reply 10 (acknowledging that in the analogous software context similar " 'license' restrictions on sold goods are consistent with this Court's cases"); Pet. Br. 43 n.13 (acknowledging that "[s]elf-replicating seeds" raise "unique exhaustion concerns"). To hold otherwise and "[a]pply[] the first sale doctrine to subsequent generations of self-replicating technology would eviscerate the rights of the patent holder." *Scruggs*, 459 F.3d at 1336. In that case, everyone—the seed industry, farmers, and consumers—would lose.

---

[33] It is no answer that a seed patentee has a remedy in contract law. To begin with, contract law provides patentees with no recourse against unauthorized downstream users of second-generation seed, who are not in privity with the parties to the technology licensing agreement. Moreover, the patent laws clearly allow patentees to obtain an injunction to prevent the unauthorized use of second-generation seed. *See* 35 U.S.C. § 283; *see also eBay Inc.* v. *MercExchange, L.L.C.*, 126 S. Ct. 1837, 1841 (Roberts, C.J., concurring) (noting "the difficulty of protecting a right to *exclude* through monetary remedies that allow an infringer to *use* an invention against the patentee's wishes"). Patent law also provides for treble damages in cases of willful infringement. *See* 35 U.S.C. § 284; *Dowling* v. *United States*, 473 U.S. 207, 227 n.19 (1985).

CONCLUSION

For the foregoing reasons, in the event this Court does not affirm the judgment below, this Court should make clear that restrictions on the use of an article produced by a patented article containing self-replicating technology, such as second-generation seed, do not implicate the patent exhaustion/first sale doctrine.

Respectfully submitted,

GARY JAY KUSHNER*
LORANE F. HEBERT
HOGAN & HARTSON L.L.P.
555 Thirteenth Street, N.W.
Washington, D.C. 20004
(202) 637-5856

*Counsel of Record

Counsel for Amicus Curiae

73 54388 c

39 pgs (13)

No. 06-937

FILED
NOV 12 2007
OFFICE OF THE CLERK
SUPREME COURT, U.S.

IN THE

Supreme Court of the United States

QUANTA COMPUTER, INC., *et al.*,

Petitioners,

v.

LG ELECTRONICS, INC.,

Respondent.

ON WRIT OF CERTIORARI TO THE UNITED STATES COURT OF APPEALS FOR THE FEDERAL CIRCUIT

BRIEF *AMICI CURIAE* OF AUTOMOTIVE ENGINE REBUILDERS ASSOCIATION, AUTOMOTIVE PARTS REMANUFACTURERS ASSOCIATION, AND INTERNATIONAL IMAGING TECHNOLOGY COUNCIL IN SUPPORT OF THE PETITIONERS

MICHAEL J. CONLON
CONLON, FRANTZ
& PHELAN, LLP
1818 N Street, N.W.
Suite 400
Washington, DC 20036
(202) 331-7050

Counsel for Amici Curiae Automotive Engine Rebuilders Association and Automotive Parts Remanufacturers Association

SETH D. GREENSTEIN
Counsel of Record
CONSTANTINE CANNON LLP
1627 I Street N.W.
Washington, D.C. 20006
(202) 204-3500

WILLIAM H. BARRETT
STEFAN M. MEISNER
MCDERMOTT WILL
& EMERY LLP
600 13th Street N.W.
Washington, D.C. 20005
(202) 756-8000

Counsel for Amicus Curiae International Imaging Technology Counsel

TABLE OF CONTENTS

	Page
STATEMENT OF INTEREST	1
SUMMARY OF ARGUMENT	5
ARGUMENT	8
I. The Exhaustion Doctrine Articulated By This Court Must Be Preserved, Not Narrowed As The Federal Circuit Has Done In *Quanta*.	8
II. Proper Interpretation Of The Exhaustion Doctrine Maintains Supreme Court Precedents Concerning Repair And Reconstruction.	12
III. Proper Interpretation Of The First Sale Doctrine Maintains The Crucial Role Of Antitrust Law Against Anticompetitive Commercial Conduct.	21
IV. Exhaustion Should Apply Also To Method Claims.	25
V. The Court's Patent Exhaustion Rule Remains Essential To Robust Commerce.	29
CONCLUSION	32

TABLE OF CITED AUTHORITIES

Page

Cases

Arizona Cartridge Remanufacturers Ass'n v. Lexmark Int'l Inc., 421 F.3d 981 (9th Cir. 2005) 18

Aro Mfg. Co. v. Convertible Top Replacement Co., 365 U.S. 336 (1961) 2, 11, 12, 13, 14

Aro Mfg. Co. v. Convertible Top Replacement Co., 377 U.S. 476 (1964) 11, 15

Bandag Inc. v. Al Bolser's Tire Stores, Inc., 750 F.2d 903 (Fed. Cir. 1984) 25, 26, 27, 28

Bottom Line Mgt., Inc. v. Pan Man, Inc., 228 F.3d 1352 (Fed. Cir. 2000) 11, 13

Dana Corp. v. American Precision Co., 827 F.2d 755 (Fed. Cir. 1987) 12

Dawson Chemical Co. v. Rohm & Haas Co., 448 U.S. 176 (1980) 17

Eastman Kodak Co. v. Image Technical Services Co., 504 U.S. 451 (1992) 2, 24, 30

Glass Equip. Dev. Inc. v. Besten, Inc., 174 F.3d 1337 (Fed. Cir. 1999) 26, 28

Cited Authorities

Page

Henry v. A.B. Dick Co.,
224 U.S. 1 (1912) 17

Hewlett-Packard Co.
v. Repeat-O-Type Stencil Mfg. Corp.,
123 F. 3d 1445 (Fed Cir. 1997), *cert. denied*,
523 U.S. 1022 (1998) 13, 27, 28

Heyer v. Duplicator Mfg. Co.,
263 U.S. 100 (1923) 12

Husky Injection Molding Systems
v. R&D Tool & Engineering,
291 F. 3d 780 (Fed. Cir. 2002) 13

Illinois Tool Works Inc. v. Independent Ink Inc.,
547 U.S. 28 (2006) 21

Image Technical Services, Inc.
v. Eastman Kodak Co.,
125 F.3d 1195 (9th Cir. 1997) 23, 24

In re: Independent Service Organizations
Antitrust Litigation,
203 F.3d 1322 (Fed. Cir. 2000), *cert. denied*
sub nom. CSU et al. v. Xerox Corporation,
531 U.S. 1143 (2001) 22

International Salt Co. v. United States,
332 U.S. 392 (1947) 21

Cited Authorities

Page

Jazz Photo Corp. v. Int'l Trade Comm'n,
264 F.3d 1094 (Fed. Cir. 2001) 13

Keeler v. Standard Folding-Bed Co.,
157 U.S. 659 (1895) 9

Kendall Co. v. Progressive Med. Tech.,
85 F.3d 1570 (Fed. Cir. 1996) 11, 13, 19

Lexmark Int'l Inc.
v. Static Control Components, Inc.,
387 F.3d 522 (6th Cir. 2004) 17

Mallinckrodt Inc. v. Medipart Inc.,
976 F.2d 700 (Fed. Cir. 1992) ..... *passim*

Motion Picture Patents Co.
v. Universal Film Mfg. Co.,
243 U.S. 502 (1917) 9, 17, 25

Nobelpharma AB v. Implant Innovations Inc.,
141 F.3d 1059 (Fed. Cir. 1998) 22

Sage Prods. Inc. v. Devon Indus. Inc.,
45 F.3d 1575 (Fed. Cir. 1995) 19

Simpson v. Union Oil Co.,
377 U.S. 13 (1964) 21

Square D Co. v. Niagara Frontier Tariff Bureau,
476 U.S. 409 (1986) 21

Cited Authorities

Page

Static Control Components, Inc. v. Lexmark Int'l, Inc., 487 F.Supp.2d 830 (E.D. Ky. 2007) 17, 18, 20, 25

Surfco Hawaii v. Fin Control Sys. Pty. Ltd., 264 F.3d 1062 (Fed. Cir. 2001), *cert. denied*, 536 U.S. 939 (2002) 13

United States v. General Electric, 272 U.S. 476 (1942) 23

United States v. Masonite Corp., 316 U.S. 265 (1942) 21

United States v. Univis Lens Co., 316 U.S. 241 (1942) ..... *passim*

United States v. Westinghouse Elec. Corp., 648 F.2d 642 (9th Cir. 1981) 21

Virginia Panel Corp. v. MAC Panel Co., 133 F.3d 860 (Fed. Cir. 1997) 22

Walker Process Equipment Inc. v. Food Machinery & Chemical Corp., 382 U.S. 172 (1965) 22

Wilbur-Ellis Co. v. Kuther, 377 U.S. 422 (1964) 14

Wilson v. Simpson, 50 U.S. 109 (1850) 12

Cited Authorities

Page

Statutes

35 U.S.C. § 154 14

Other Authorities

United States Census Bureau,
2005 Service Annual Survey 2

STATEMENT OF INTEREST[1]

Amici are not-for-profit associations of companies that compete against original equipment manufacturers ("OEMs") for sale of replacement parts and consumable goods and provision of repair services.

Automotive Engine Rebuilders Association represents garages, machine shops, and other generally small businesses that rebuild motor vehicle engines for automobiles, trucks, buses, construction and farming equipment, and smaller boats.

Automotive Parts Remanufacturers Association represents companies that rebuild automotive and truck related "hard" parts for passenger cars, heavy duty vehicles such as trucks, buses, off-road vehicles, and marine, industrial, and construction equipment.

International Imaging Technology Council ("I-ITC") represents the interests of the imaging supplies industry, including office-machine retail and repair, office-supply retail, computer retail, repair and networking companies, and all related industry suppliers.

---

1. The parties have consented to the filing of this brief. No counsel for a party authored this brief in whole or in part, and no counsel or party made a monetary contribution intended to fund the preparation or submission of this brief. No person other than *amicus curiae*, its members, or its counsel made a monetary contribution to its preparation or submission.

Products such as automobiles and computer printers contain removable and consumable parts that can be repaired or refurbished many times. By procuring parts and repair services, consumers extend the useful life of these products and enhance the value of their initial investments. Members of the amici satisfy this consumer demand by providing alternative sources of consumable goods, replacement parts, and services at lower cost and of as good or better quality than the OEM. Our companies' replacement products often have enhanced features compatible with, but not available on, the original equipment. Competition from these companies constrains OEMs from increasing prices to supracompetitive levels, and spurs OEMs to improve quality and innovate new features to meet or surpass the alternative-sourced products.

These companies contribute substantially to the American economy.[2] Amici believe more than 10,000 companies in the United States rebuild automobile parts, and more than 3,000 domestic businesses recondition and repair office imaging supplies. According to the United States Census Bureau, in 2005 consumers spent more than $85 billion on automotive repair and maintenance, and more than $17.5 billion for repair and maintenance of electronic and precision equipment.[3] In 2004, more

---

2. *See, Eastman Kodak Co. v. Image Technical Services Co.*, 504 U.S. 451, 462 and n. 6 (1992). *See also, Aro Mf'g Co. v. Convertible Top Replacement Co.*, 365 U.S. 336, 357-358 (1961) (*"Aro I"*) (Justice Black, concurring).

3. United States Census Bureau, 2005 Service Annual Survey, Table 10.1, available online at *http://www.census.gov/svsd/www/services/sas/sas_data/81/2005_NAICS81.pdf* (last visited October 31, 2007).

than $6.5 billion was spent for computer and office machine repair and maintenance. *Id.* Approximately 30% of monochrome toner cartridges and 15% of color cartridges sold in 2006 were aftermarket products.

Reuse and repair promote sound environmental policies, and conserve resources such as precious metals and petroleum-based plastics. I-ITC estimates reconditioning ink and toner cartridges will keep some 84,000 tons of industrial-grade plastics and metals out of landfills this year. Acquisition guidelines of federal agencies, state and municipal governments, and corporations express preferences for purchase of refurbished and recycled products such as those produced by members of the amici.

Companies represented by amici run the gamut from large, technologically-sophisticated entities with substantial intellectual property portfolios to small operators that service local customers. What unites these companies under the banner of this case is their stake in access to original equipment free of downstream patent restraints on alienation or repair asserted by the manufacturer as post-sale conditions on the purchase of patented goods. Without access to OEM products to repair or refurbish, these companies cannot provide choices to consumers or competition to OEMs based on price, quality, and features. The amici respectfully submit this brief so the Court may consider the impact, on commerce generally and our industries in particular, of the Federal Circuit's narrowing of the exhaustion rule.

Following recent Federal Circuit exhaustion decisions, OEMs are applying restrictive post-sale patent notices to products and packaging sold to consumers. Though ostensibly positioned as a contract with the purchaser, OEMs deploy these post-sale restrictions as a strategem to lock out aftermarket competition for products and services that otherwise would constitute permissible repair under the patent laws. Under a recent district court decision, even the simple act of refilling a printer cartridge with unpatented ink or toner could be deemed infringement under a "single use only" post-sale notice. But for that post-sale restriction, that activity indisputably would be permissible repair.

The perspectives and experience of the amici thus place in sharp relief the harmful consequences of the erroneous decisions of the Federal Circuit. If post-sale conditions create enforceable patent licenses, both consumers and aftermarket competitors risk liability for patent infringement if the article is repaired by anyone other than the patentee. Patent law and competition best will be served by a bright-line holding, consistent with Court precedents: The first sale or passage of title to a patented article exhausts the patent owner's interest in that article, and in any method patent covering the reasonably contemplated uses of that article. Any additional purported post-sale restrictions on the use or disposition of that article only may be imposed to the extent consistent with contract and antitrust law, and may be enforceable only under contract law.

SUMMARY OF ARGUMENT

Under long-standing precedents of this Court, the first sale or passage of title to a patented article exhausts the patentee's right to seek further reward upon that article. Any attempt to further restrain the post-sale rights of the purchaser is to be adjudged under contract and commercial law, but no longer is subject to the patentee's rights or a patent-based remedy. This articulation of the exhaustion rule properly balances the patent owner's exclusive rights with the consumer's right to reuse, resell, repair, and improve lawfully-acquired property, and the public interest to prevent unfair competition.

Recent Federal Circuit decisions upend this balance, to the detriment of competition and the public interest. In a line of cases from *Mallinckrodt* [4] to *Quanta*, the Federal Circuit holds post-sale restrictions revive exhausted patent rights, and deems purchasers of patented goods and third party aftermarket competitors liable for patent infringement from otherwise-lawful combinations and repair. *Quanta* improperly extends patent rights beyond the line of exhaustion drawn by this Court and should be reversed.

These Federal Circuit decisions also encroach upon precedents of this Court defining lawful repair. Repair and customization industries provide valuable service to consumers and contribute billions of dollars to our economy. The post-sale restrictions in *Quanta* would prevent commonplace activities such as repair and

4. *Mallinckrodt, Inc. v. Medipart, Inc.*, 976 F.2d 700 (Fed. Cir. 1992).

upgrading of elements of a personal computer, an automobile, or any patented combination, much as the post-sale restrictions in *Mallinckrodt* would impose patent infringement liability upon competitors who engage in otherwise lawful repair. Consumers and aftermarket competitors targeted by these post-sale restrictions may not know whether the restriction exists or, even if embossed on the device itself, whether the restriction is valid or enforceable. Yet, under *Quanta*, these consumers and aftermarket competitors could be sued and potentially held liable for patent infringement.

The threat of potentially devastating patent infringement liability chills competition by aftermarket businesses. Patent suits involve technically complex issues of infringement, claim construction, and validity, and are extremely expensive to defend. Enhanced damages, attorney fees, and preliminary and permanent injunctive relief pose intolerable risks for smaller entrepreneurial companies. By contrast, suits based on contract, as should be the norm under the Court's exhaustion rule, are far less expensive to defend and less likely to jeopardize a company's long-term survival. Reaffirmation of this Court's exhaustion rule will protect the public's right to repair and stimulate investment in aftermarket industries.

Reaffirming the scope of patent exhaustion will restore the proper balance between patent rights and antitrust law. Post-sale patent conditions and infringement lawsuits typically target competitors for supplies and repair services rather than purchasers that purportedly agreed to the restrictions. By allowing post-sale patent restrictions to limit exhaustion, the Federal

Circuit necessarily proscribes lawful aftermarket competition and limits antitrust defenses – thereby restricting consumer choice, increasing consumer prices, and stifling aftermarket innovation.

The Federal Circuit erred by holding patent exhaustion inapplicable to method patents. This holding conflicts with prior Federal Circuit cases and is inconsistent with principles underlying exhaustion. The Court should confirm: (1) authorized sale of a patented article by a patent owner or its licensee also exhausts patent rights with respect to any repair that practices a method actually used to construct the article; and, (2) authorized sale of a patented article, or an unpatented article that necessarily will be used in an infringing combination, exhausts rights in any patented method that could reasonably interfere with either the repair of the article or a further combination of patented and unpatented elements.

A clear rule finding exhaustion upon passage of title best serves modern commerce. Products such as cars and computers may be sold and resold many times during their useful life. Millions of businesses and consumers use online commerce to resell anything from small used parts to a fleet of cars. Sellers and purchasers are entitled to know they have the right to resell, purchase, and use what they buy, free from the threat of infringement suits.

ARGUMENT

I. The Exhaustion Doctrine Articulated By This Court Must Be Preserved, Not Narrowed As The Federal Circuit Has Done In *Quanta*.

Patent law vests the patentee with a limited monopoly interest, the full extent of which is an exclusive right to make, use, and sell the invention or discovery or to authorize others to do so. *United States v. Univis Lens Co.*, 316 U.S. 241, 250 (1942). As a statutory exception to policies disfavoring monopolies, the patent right imposes some sacrifice upon social welfare in return for the contributions of patent owners to the progress of science and the useful arts. The degree of sacrifice required of the public is proportionate to the scope of the patent right. Any aggrandizement of the patent right necessarily encroaches on other fundamental public interests.

Long-established doctrines of patent and competition law reflect the inherent tensions between the right of the patent owner to reap rewards for its invention and the right of the public to engage in commerce around the patented invention and in the patented article itself. The exhaustion, or first sale, doctrine performs a key role in leveling this balance. By setting clear limits on the right of a patent owner to control downstream commerce in vended patented articles, the exhaustion doctrine shapes the contours of the public's right to resell, reuse, recycle, and repair the patented article.

The exhaustion doctrine articulated by this Court struck the proper balance among those interests. The patentee obtains its reward through the initial authorized sale, but the sale or passage of title to a patented article exhausts the patentee's interest in that article under patent law.[5] Exhaustion extends to any patent covering reasonable uses of the patented article.[6] If a patent owner seeks to impose any post-sale restriction on use or resale of the article, the validity and enforceability of that restriction is to be determined by state contract law – not patent law.[7]

---

5. *See, e.g., United States v. Univis Lens Co.*, 316 U.S. at 250 ("[The patent owner's] monopoly remains so long as he retains the ownership of the patented article. But sale of it exhausts the monopoly in that article and the patentee may not thereafter, by virtue of his patent, control the use or disposition of the article").

6. *Id.*, 316 U.S. at 250-251 (sale of the lens blank transfers ownership of the article and licenses the right to use the patent to produce the finished article).

7. "The extent to which the use of the patented machine may validly be restricted to specific supplies or otherwise by special contract between the owner of a patent and the purchaser or licensee is a question outside the patent law,...." *Motion Picture Patents Co. v. Universal Film Mfg. Co.*, 243 U.S. 502, 509 (1917), *citing Keeler v. Standard Folding-Bed Co.*, 157 U.S. 659, 666 (1895)

> [O]ne who buys patented articles of manufacture from one authorized to sell them becomes possessed of an absolute property in such articles, unrestricted in time or place. Whether a patentee may protect himself and his assignees by special contracts

(Cont'd)

Whether a post-sale restriction is subject to patent or contract law makes a vital difference to commerce. Patent infringement suits are complex and extremely expensive. Virtually any patent case requires specialized technical and legal analysis and expert testimony regarding claim construction, patent validity, and infringement. Small entrepreneurial companies, like those represented by *amici*, facing possible patent litigation must weigh the risks of enhanced damages, attorney fees, and injunctive relief. A preliminary injunction may force them near bankruptcy by starving them of ongoing revenue needed to support the business. Almost any patent suit by their definition is "bet the company" litigation. By contrast, breach of contract or tort litigation is far less expensive to defend, and even an adverse outcome is less likely to jeopardize their long-term survival.

Over the last 15 years, the Federal Circuit departed sharply from the Court's clear exhaustion principles. From *Mallinckrodt* through *Quanta*, the Federal Circuit granted patent owners new powers to assert infringement for breach of post-sale restrictions. While agreeing that validity of a post-sale restriction is to be adjudged by contract law, the Federal Circuit nevertheless revived a patent owner's ability to assert infringement not only against the purchaser but, significantly, also against persons not party to that

---

(Cont'd)

> brought home to the purchasers is not a question before us, and upon which we express no opinion. It is, however, obvious that such a question would arise as a question of contract, and not as one under the inherent meaning and effect of the patent laws.

restrictive contract.[8] The Federal Circuit also permitted post-sale notices to vitiate exhaustion and implied licenses to method patents covering an article's reasonably contemplated uses. As a consequence, the Federal Circuit limited the circumstances in which antitrust law can remedy any anticompetitive effects of post-sale restrictions on commercial activities, such as recycling, customization and repair, that otherwise would be permissible under patent law.

This expansion of patent rights cannot be squared with the precedents of this Court.[9] The Federal Circuit has upset the policy balance established by this Court,

---

8. For example, the defendant in *Mallinckrodt* was an aftermarket competitor that reconditioned the inhalers, not the hospital/purchaser alleged to be bound by a post-sale notice.

9. The Court also should clarify that the exhaustion and repair doctrines are *not* based on implied license. *See, e.g., Kendall Co. v. Progressive Med. Tech.*, 85 F.3d 1570, 1573 (Fed. Cir. 1996), *citing Aro Mfg. Co. v. Convertible Top Replacement Co.*, 377 U.S. 476, 484 (1964) ("*Aro II*"); *Bottom Line Mgt., Inc. v. Pan Man, Inc.*, 228 F.3d 1352, 1354 (Fed. Cir. 2000) *citing Aro I*, 365 U.S. at 346. The distinction between exhaustion of patent rights and implied license is not merely semantic – it is fundamental. If a patent owner exhausts its rights to make, use, and sell that article upon first sale, the patent owner has no further rights in that article to license either directly or by implication. *See, United States v. Univis Lens*, 316 U.S. at 250 (a first licensed sale "exhausts the monopoly in that article and the patentee may not thereafter, by virtue of his patent, control the use or disposition of the article."). Since the patent owner has no further right to control the licensed use, and repair does not "make" the patent, the purchaser is entitled by exhaustion to repair the article. This principle further is illustrated by *Aro I*, in which the repairs were justified by exhaustion upon the first sale. Implied license was not cited by the majority as the rationale for its decision.

tipping the scales decidedly toward the patent owner and away from the public interest. Amici thus urge this Court to recalibrate the law in accordance with its established precedents defining the scope of exhaustion, permissible repair, and unfair competition.

II. Proper Interpretation Of The Exhaustion Doctrine Maintains Supreme Court Precedents Concerning Repair And Reconstruction.

The doctrine establishing that repair of patented articles does not infringe the patent right is nearly as old as the American industrial revolution itself.

> Since *Wilson v. Simpson* [in 1850], it has been the established law that a patentee had not 'a more equitable right to force the disuse of the machine entirely, on account of the inoperativeness of a part of it, than the purchaser has to repair, who has, in the whole of it, a right of use.'[10]

Permissible repair has been found across the breadth of commerce, including automobiles,[11]

---

10. *Heyer v Duplicator Mfg. Co*, 263 U.S. 100, 101 (1923) (purchaser of duplicating machine had the right to replace consumable gelatine bands, and did not have to purchase them from the patent owner), *citing Wilson v. Simpson*, 50 U.S. 109, 123 (1850) (owner of a patented planing machine could replace worn-out cutting blades, even though the blades were fundamental to the invention).

11. *See, Aro I* (replacement fabric convertible tops); *Dana Corp. v. American Precision Co.*, 827 F.2d 755 (Fed. Cir. 1987) (rebuilding automobile clutches using new parts and used parts from many disassembled worn clutches held permissible repair).

surfboards,[12] medical devices,[13] injection molding machines,[14] cooking devices,[15] disposable cameras,[16] and computer printers.[17]

In *Aro I*, this Court adopted a test to distinguish permissible repair from infringing reconstruction. The Court clarified that "mere replacement of [broken or worn-out] parts, whether of the same part repeatedly or of different parts successively, is no more than the lawful right of the owner to repair his property"; and such replacement constitutes lawful repair regardless of how "essential [each nonpatented part] may be to the patented combination and no matter how costly or difficult replacement may be." *Aro I*, 365 U.S. at 345-346. This distinction protected the patent owner against

---

12. *Surfco Hawaii v. Fin Control Sys. Pty. Ltd.*, 264 F.3d 1062 (Fed. Cir. 2001), *cert. denied sub nom. Fin Control Sys. Pty. Ltd. v. Surfco Hawaii*, 536 U.S. 939 (June 24, 2002) (replacing fins constituted permissible repair).

13. *Kendall Co. v. Progressive Med. Tech.*, 85 F.3d at 1576 (right to repair included replacement of unspent parts for purposes of hygiene).

14. *Husky Injection Molding Systems v. R&D Tool & Engineering*, 291 F.3d 780 (Fed. Cir. 2002).

15. *Bottom Line Mgt., Inc. v. Pan Man, Inc.*, 228 F.3d at 1355 (resurfacing cooking plates was permissible repair, not infringement of device and method claims).

16. *Jazz Photo Corp. v. Int'l Trade Comm'n*, 264 F.3d 1094 (Fed. Cir. 2001) (approving eight-step repair process).

17. *Hewlett-Packard Co. v. Repeat-O-Type Stencil Mfg. Corp.*, 123 F.3d 1445 (Fed Cir. 1997), *cert. denied*, 523 U.S. 1022 (1998) (permissible repair to modify ink jet cartridge for resale).

those who re-make the invention anew,[18] while promoting the paramount public interest in lawful commerce pertaining to patented goods.

Thousands of businesses provide customization and repair services and supply replacement parts for automobiles and electronics products. Automotive parts businesses commonly repair and recondition hundreds of reusable parts such as transmissions, alternators, brakes, clutches, and controlled velocity joints. Car engines commonly are customized and upgraded by third party repair shops using aftermarket parts. Suppliers in the imaging industry repair toner and ink cartridges for business and home office use with both mechanical parts and complex electronic chips that regulate and upgrade printing operations. Consumers upgrade computers with additional storage and memory, graphics processing and gaming boards. Consumers benefit from competition for service, repair and replacement of parts through lower prices, higher quality, and competitive features.

As Justice Black observed in his concurrence in *Aro I*, small repair and service businesses such as those represented by *amici* provide vital services to the domestic economy, but need bright line rules to avoid

---

18. *See, Wilbur-Ellis Co. v. Kuther*, 377 U.S. 422, 424 (1964) ("The idea of 'reconstruction' in this context has the special connotation of those acts which would impinge on the patentee's right 'to exclude others from making,' 35 U.S.C. 154, the article."). In *Wilbur-Ellis*, the Court held that resizing unpatented parts in a patented combination was repair, not reconstruction, even though the activity customized the patented article by replacing unworn parts.

the "disastrous or even lethal consequences" of patent infringement suits:

> [B]usinessmen are certainly entitled to know when they are committing an infringement. . . . But to what avail these congressional precautions if this Court, by its opinions, would subject small businessmen to the devastating uncertainties of nebulous and permissive standards of infringement under which courts could impose treble damages upon them for making parts, distinct, separable, minor parts, or even major parts of a combination patent, upon which parts no patent has been or legally could have been issued.[19]

The right to repair depends upon proper application of the Court's precedents on patent exhaustion and implied license, because the repair right attaches only where the product is subject to exhaustion or the use of the product is licensed.[20] Any curtailment of the scope of patent exhaustion or implied license necessarily constricts the repair right, and substantially expands a patent owner's power to preclude otherwise lawful commerce in the repair of patented articles and the sale of unpatented components.

---

19. 365 U.S. at 358-359.

20. *See Aro II*, 377 U.S. at 480, in which neither exhaustion nor implied license justified repair to a car that had no patent license to first make or sell the combination ("when the structure is unlicensed ... even repair constitutes infringement.").

While other Federal Circuit decisions hew closely to the Court's definition of permissible repair,[21] decisions like *Quanta* eviscerate the right to repair. Indeed, the Federal Circuit expressly recognized and sanctioned this anomalous result. *Mallinckrodt* involved a single use restriction on a medical inhaler sold to hospitals. The patent owner received payment for the patented article and the hospitals took title to the device. Although title passed to the hospital, the patentee marked the inhalers with the words, "single use only," *i.e.*, a post-sale notice. The hospitals provided used devices to Medipart, which sterilized and repackaged them for a second use. The district court found this reconditioning activity to be permissible repair that directly infringed no Mallinckrodt patent. Nevertheless, the Federal Circuit decreed the patent owner entitled to judgment as a matter of law against the repair defense if the post-sale single use restriction were sustained on remand.[22]

By giving post-sale restrictions primacy over patent exhaustion, the Federal Circuit has redrawn the boundary between the rights of the public and the patentee's competitors to repair patented articles and replace unpatented components, and the right of patent owners to exclude infringing reconstruction.

---

21. *See* cases cited *supra* at 11-12, n. 11-17.

22. *Mallinckrodt*, 976 F.2d at 709. The Federal Circuit remanded the case for consideration of whether the three-word notice created a valid post-sale patent license condition under state law, and if the restriction against reuse was within the patent right or otherwise justified. If so, the Federal Circuit held, the defendant could be liable for patent infringement, even for otherwise lawful repair. The case appears to have been resolved by settlement without any further legal or factual development.

Mallinckrodt through *Quanta* have reclaimed the right to repair from the public, and given patent owners a right to file patent infringement suits against aftermarket service and repair organizations for otherwise permissible repair. The Federal Circuit thus improperly has extended patent protection beyond the first sale of patented articles.

Predictably,[23] the sea change in *Mallinckrodt* spawned more intrusive efforts by patent owners to stymie aftermarket competition for repair. The case of *Static Control Components, Inc. v. Lexmark Int'l, Inc.*[24] provides an object lesson in how post-sale restrictions built upon *Mallinckrodt* openly target lawful competition, not compensation for patent rights. Lexmark, a computer printer manufacturer, affixed a label on the toner cartridge box with a purported post-sale patent restriction. According to Lexmark, the label required the purchaser either to return the used cartridge only to Lexmark for remanufacturing and recycling or to throw the cartridge away. The restriction prohibited the purchaser only from giving the empty cartridge to third parties. Thus, the restriction was aimed explicitly at stifling competition from aftermarket

---

23. *See Dawson Chemical Co. v. Rohm & Haas Co.*, 448 U.S. 176, 190 (1980), describing the rapid adoption of conditional licensing, and the ensuing corrosive effects on commerce, in response to *Henry v. A.B. Dick Co.*, 224 U.S. 1 (1912) – a result promptly reversed by the Court in *Motion Picture Patents Co. v. Universal Film Mfg. Co.*, 243 U.S. at 515.

24. 487 F.Supp.2d 830 (E.D. Ky. 2007). Lexmark added claims for patent infringement against Static Control in addition to its initial claims for violations of copyright law. *Lexmark Int'l Inc. v. Static Control Components, Inc.*, 387 F.3d 522 (6th Cir. 2004).

companies that recondition and refill toner cartridges.[25] Lexmark sued Static Control, which supplied nonpatented toner and parts used to repair empty cartridges, and, later, several "rechargers" that repaired and refilled empty toner cartridges. On summary judgment, the court found the cartridge rechargers would have engaged in permissible repair of the cartridge empties but for the post-sale restriction which the court, citing *Mallinckrodt*, held to preclude exhaustion from sale of the cartridge.[26]

In cases such as *Mallinckrodt* and *Static Control* in which post-sale restrictions target aftermarket competitors, narrowing the exhaustion and permissible repair doctrines exacts particularly severe penalties on commerce. While repair and supplies businesses can rely on patent marking and published patents to evaluate whether their activities constitute repair and not reconstruction, they have no analogous public information to determine whether devices are subject to post-sale restrictions. Businesses that later upgrade

---

25. Lexmark sold unrestricted cartridges at a higher price. But, a purchaser could throw away the empty restricted cartridge without breaching the post-sale condition. Therefore, any price differential reflected the commercial value to Lexmark of keeping empties from its competitors, not compensation for any patent rights in the article itself.

26. The Ninth Circuit in a different case upheld the Lexmark label as a valid contract in the context of California unfair competition and false advertising law. The appellant in that case neither challenged the validity of the *Mallinckrodt* decision nor contended that Lexmark acted outside the scope of the patent grant. *Arizona Cartridge Remanufacturers Ass'n v. Lexmark Int'l Inc.*, 421 F.3d 981, 987 (9th Cir. 2005).

or repair the computers at issue in *Quanta* may be unaware of LG's purported downstream restriction against using non-Intel parts. Aftermarket competitors likely never will see the outer container of the original vended item, and have no information to determine whether the outer container was slapped with a post-sale restriction or whether such a restriction legally could prevent repair. Many of these service companies receive empty consumable articles through intermediaries, such as commercial brokers and "cash for trash" charitable drives, without any of the original packaging. For example, charities that collect ink and toner cartridges sell them to brokers who place the cartridges on pallets wrapped in plastic, with no original packaging.

Even if the articles themselves are marked with a restrictive legend, the mere existence of such a "notice" does not make it *per se* valid or enforceable at law – a fact demonstrated by other, post-*Mallinckrodt*, Federal Circuit cases in which nearly identical "single use only" product markings were held *not* to create a restrictive patent license.[27] Thus, regardless of whether consumers and aftermarket competitors actually see the purported post-sale notice, they cannot know what rights they have to repair devices they lawfully own. Yet, under the Federal Circuit decisions, these businesses and consumers potentially would be subject to suit for patent infringement.

---

27. *See, e.g., Kendall Co. v. Progressive Medical Tech. Inc.*, 85 F.3d at 1575, finding permissible repair by replacing with aftermarket parts a pressure sleeve sold in packaging marked "for single patient use only"; *Sage Prods. Inc. v. Devon Indus. Inc.*, 45 F.3d 1575, 1578 (Fed. Cir. 1995), finding repair by aftermarket replacement of used, but not spent, containers marked "single use only."

Competitors in supply, repair, and customization markets need a bright-line exhaustion test to stimulate investment and promote lawful commerce. Absent a clear rule that post-sale restrictions sound only in contract, any business owner considering entry into a repair or customization aftermarket would have to weigh the risk of unknowable patent infringement liability. This risk is all the more acute because many of these businesses begin life as small, family-owned enterprises. If suppliers and servicers cannot reasonably assess risks associated with their business plan, the threat of patent infringement litigation – with the potential for increased damages, attorney fee awards, and injunctions – will stifle investment and chill competition.[28] By contrast, if potential liability is determined under contract rather than patent law, liability would lie against those who breach or tortiously interfere with the contract, but not those who use or repair a patented device beyond post-sale terms they may never have seen.

In sum, the Federal Circuit's decision in *Quanta* encroaches upon the public interest by constricting the scope of permissible repair, contrary to the patent law precedents of this Court. Reversal of *Quanta* and re-affirmance of the Court's long-standing patent exhaustion rule will provide needed certainty to aftermarket repair industries, promote consumer benefits from competition in the supplies market, and reduce the risk of unwarranted patent infringement litigation – without depriving the patent owner of its right to receive remuneration upon first sale of a patented invention.

---

28. This concern is not merely hypothetical. Several cartridge rechargers testified in *Static Control* they decided for that precise reason not to repair or to stop repairing Lexmark cartridges.

III. Proper Interpretation Of The First Sale Doctrine Maintains The Crucial Role Of Antitrust Law Against Anticompetitive Commercial Conduct.

The Federal Circuit decisions from *Mallinckrodt* through *Quanta* also upset the equilibrium between patent and antitrust law. A patent is an exception to the rule against monopolies; in effect, a limited monopoly granted to exclude others from manufacture, use, and sale of an invention. *See, Illinois Tool Works Inc. v. Independent Ink, Inc.*, 547 U.S. 28, 44 (2006), *quoting International Salt Co. v. United States*, 332 U.S. 392, 395 (1947). "One body of law creates and protects monopoly power while the other seeks to proscribe it." *United States v. Westinghouse Elec. Corp.*, 648 F.2d 642, 646 (9th Cir. 1981).

Notwithstanding, the Patent Act does not bestow a *carte blanche* privilege to violate the antitrust laws. As an exception to policies favoring free competition, the right to exclude should be construed within the scope of the patent grant, but no further. "Since patents are privileges restrictive of a free economy, the rights which Congress has attached to them must be strictly construed so as not to derogate from the general law beyond the necessary requirements of the patent statute."[29] In navigating these complementary, often

---

29. *United States v Masonite Corp.*, 316 U.S. 265, 279 (1942), *citing United States v. Univis Lens*, decided the same day. *See also, Simpson v. Union Oil Co.*, 377 U.S. 13, 24 (1964) ("The patent laws which give a 17-year monopoly on 'making, using, or selling the invention' are *in pari materia* with the antitrust laws and modify them *pro tanto*." *See also, Square D Co. v. Niagara Frontier Tariff Bureau*, 476 U.S. 409, 421 (1986) (exemptions from the antitrust laws are "strongly disfavored.").

conflicting, policies, the Federal Circuit holds the patent monopoly immunizes any anticompetitive effects of a patentee's conduct in all but three circumstances: (1) the exclusion misuses or extends the patent right beyond the scope of the patent grant (*e.g.*, seeking multiple royalties following the first sale or tying a patent license to purchase of unpatented goods); (2) the asserted patent was procured by knowing and willful fraud;[30] or, (3) the infringement suit is both objectively baseless and subjectively motivated by a desire to impose collateral anticompetitive harm.[31] Each of these requirements erects a high hurdle for any potential antitrust claim.

With respect to the first of the above conditions, the Federal Circuit holds, "[s]hould the restriction be found to be reasonably within the patent grant, *i.e.*, that it relates to subject matter within the scope of the patent claims, that ends the inquiry."[32] Therefore, the Federal

---

30. *Walker Process Equipment Inc. v Food Machinery & Chemical Corp.*, 382 U.S. 172 (1965).

31. *See, In re: Independent Service Organizations Antitrust Litigation (CSU et al. v. Xerox Corporation)*, 203 F.3d 1322, 1326 (Fed. Cir. 2000), *cert. denied* 531 U.S. 1143 (Feb. 20, 2001) ("*ISO Antitrust Litigation*"), quoting *Nobelpharma AB v. Implant Innovations Inc.*, 141 F.3d 1059, 1071 (Fed. Cir. 1998). In *ISO Antitrust Litigation*, the Federal Circuit found no violation of the Sherman Act from a unilateral refusal by Xerox to sell parts to independent service organizations unless they also were end-users of the Xerox copiers, on grounds that such a refusal, regardless of effect or motivation, fell within the scope of the patentee's exclusive rights.

32. *Mallinckrodt*, 976 F.2d at 708; *see also, Virginia Panel Corp. v. MAC Panel Co.*, 133 F.3d 860, 869 (Fed. Cir. 1997).

(Cont'd)

Circuit's view that a post-sale condition on the use or sale of a patented article remains within the patent grant, even though title to the articles properly passed to the purchaser, constrains the operation of antitrust law. By exempting post-sale conditions from exhaustion, the Federal Circuit concomitantly expands the power of patent owners to preclude otherwise-lawful competition and eliminates available antitrust remedies against a patentee's otherwise *un*lawful conduct.[33] If post-sale conditions instead were assessed only under contract law, the patent owner would remain free to protect its interests against breaches of a valid agreement, but could not raise patent law to shield its anticompetitive conduct.

To illustrate the significance of the patent exemption in the antitrust context, consider the results in two cases

---

(Cont'd)

Compare, United States v. General Electric, 272 U.S. 476, 489 (1942) (a patentee that has not granted title to the patent itself "may grant a license to make, use, and vend articles under the specifications of his patent for any royalty, or upon any condition the performance of which is reasonably within the reward which the patentee by the grant of the patent is entitled to secure."). The Federal Circuit's formulation in *Mallinckrodt* appears narrowly to focus only on the scope of the claims. Anticompetitive effects also occur where a restriction strays beyond the substantive or temporal rights granted under patent law.

33. *See Image Technical Services, Inc. v. Eastman Kodak Co.*, 125 F.3d 1195, 1216 (9th Cir. 1997) ("Nor does the right of exclusion [under patent law] protect an attempt to extend a lawful monopoly beyond the grant of a patent. . . . Much depends, therefore, on the definition of the patent grant and the relevant market.").

involving aftermarket services in the reprographics industry. In *Image Technical Services v. Eastman Kodak*, Kodak adopted policies to deprive independent companies of parts needed to compete for printer repair services. The Ninth Circuit held Kodak's desire as a patent owner to exclude others was a presumptively valid business justification under antitrust law, rebuttable by evidence that the reliance on the patent right was subjectively pretextual. The court, however, found ample evidence of pretext. The patent justification played no part in Kodak's actual decision to withhold sales of parts, and the sales ban applied to thousands of parts though only 65 were patented. 125 F.3d at 1219-1220.[34] A different result would have issued from the Federal Circuit. Under *Mallinckrodt*, it is irrelevant that a claimed reliance on the patent is subjectively pretextual if the restriction *could* be justified under the patent grant. 976 F.2d at 708. The Federal Circuit reitified this holding in *ISO Antitrust Litigation* by rejecting the Ninth Circuit's approach from *Image Technical Services*: "We therefore will not inquire into [the patent owner's] subjective motivation for exerting his statutory rights, even though his refusal to sell or license his patented invention may have an anticompetitive effect,

34. Kodak had not claimed the right to exclude under patent law as a justification for its conduct when it initially sought early summary judgment against the ISOs. *See, Eastman Kodak v. Image Technical Services*, 504 U.S. at 461; *ISO Antitrust Litigation*, 203 F.3d at 1327. While there perhaps is some ambiguity whether the Ninth Circuit would have decided *ISO Antitrust Litigation* in the same way as the Federal Circuit, the Federal Circuit's explicit rejection of *Image Technical Services* suggests that it would ignore a wholly pretextual assertion of patent rights so long as a hypothetical non-pretextual assertion of patent rights would not be objectively baseless. 203 F.3d at 1327.

so long as that anticompetitive effect is not illegally extended beyond the statutory patent grant." 203 F.3d at 1327-1328.

The Federal Circuit approach to exhaustion thus creates further conflict with the antitrust laws. If a valid post-sale restriction is to be enforced under contract law rather than patent law, a patent owner cannot seek to justify the anticompetitive effects of such a restriction under its patent grant. By sweeping post-sale conditions within the patent right, the Federal Circuit improperly broadens the patent owner's right to exclude and narrows the field of lawful competition. While post-sale restrictions seeking multiple royalties on the same articles (as in *Quanta*) or promoting sales of more aftermarket supplies (as in *Mallinckrodt* and *Static Control*) may further the commercial interests of the patent owner, profit maximization is not the ultimate aim of the patent laws.[35]

IV. Exhaustion Should Apply Also To Method Claims.

Patent owners commonly draft patent claims to cover both a device and a method of using the device.[36] Method inventions may be set out in separate patents or included as separate claims in a device or system patent. In *Quanta*, for example, at least two of the five patents at

---

35. *See, e.g., Motion Picture Patents Co. v. Universal Film Mfg. Co.*, 243 U.S. at 510-511.

36. *See, e.g., Bandag Inc. v. Al Bolser's Tire Stores, Inc.*, 750 F.2d 903, 922 (Fed. Cir. 1984) (noting it is "commonplace" that competent claim drafting can define the same invention as apparatus or methods).

issue include both system and method claims. 453 F.3d at 1368. The right to repair would mean little if the owner of a patent covering a device could sue aftermarket competitors based on patent claims covering the method of repair. Therefore, whether exhaustion applies also to method claims is crucial to those who may have to practice a patented method in the course of repair, customization, or combination of elements.

Federal Circuit decisions with respect to exhaustion of method claims are marked by inconsistency in approach and result. In *Quanta*, the Federal Circuit flatly pronounces that "the sale of a device does not exhaust a patentee's rights in its method claims." 453 F.3d at 1370. In *Glass Equip. Dev. Inc. v. Besten, Inc.*, the Federal Circuit considered whether "sale of an unpatented article grants an implied license to practice one or more methods claimed in a separate patent." 174 F.3d 1337, 1341 n.1 (Fed. Cir. 1999). The unpatented article also had been used by the defendant in noninfringing ways. The Federal Circuit could have taken a narrow course and found exhaustion inapplicable because of those noninfringing uses, but instead held broadly that sale of unpatented articles does not exhaust patent rights. *Id.* In *Bandag*, the defendant Bolser purchased a used tire recapping machine that was not covered by a patent, but that practiced a method patent owned by Bandag. The court found no implied license and no exhaustion because the machine was not covered by plaintiff's patent and could have been modified for use for noninfringing purposes.[37] 750 F.2d at 924-925.

37. *Bandag* took an unreasonably expansive view of what constitutes "noninfringing purposes" for purposes of defeating

(Cont'd)

However, it is unclear whether the *Bandag* holding was intended as a blanket rule against exhaustion or a fact-specific finding.

In at least one post-*Bandag* case, the Federal Circuit did find method claims exhausted by the sale of a patented article. *Hewlett-Packard v. Repeat-O-Type Stencil* concerned the aftermarket modification and refilling of patented ink-jet printer cartridges. After finding the cartridge modification constituted repair, the court further held refilling ink reservoirs did not infringe HP's process claims. The court agreed the process claims necessarily were practiced by refilling the cartridge, but held the claims exhausted by the first sale: "when a patentee sells a device without condition, it parts with the right to enforce any patent that the parties might reasonably have contemplated would interfere with the use of the purchased device." 123 F.3d at 1455.[38]

(Cont'd)
an implied license claim. The court found potential noninfringing purposes included modifying the equipment or selling it as a whole or as replacement parts. 750 F.2d at 925. *Amici* submit that the "noninfringing purposes" standard should focus on whether there exist reasonable noninfringing *uses* of the device *as is*, not whether a machine might be modified, resold, or disassembled without infringement.

38. The court also found an implied license from exhaustion of a patent that had both apparatus claims and process claims covering the use of the apparatus. "HP 'authorized' the practice of any method claims in the '295 patent when it sold the cartridges unconditionally." *Id.*, *citing Univis Lens*, 316 U.S. at 249. Reliance on "authorization" is questionable for two reasons. First, the Federal Circuit blurred the distinct concepts of

(Cont'd)

Thus, the Federal Circuit holding in *Quanta* that "sale of a device does not exhaust a patentee's rights in its method claims," if accepted at face value, directly conflicts with the finding of exhaustion in *Hewlett-Packard*. The differing articulations of the applicable exhaustion rule from *Bandag* to *Hewlett-Packard* to *Glass Equipment* to *Quanta* call out for resolution by this Court.

The better rule should be that exhaustion of method claims occurs upon first sale in at least two circumstances. First, authorized sale of a patented article (by the patent owner or its licensee) should exhaust the patentee's right with respect to any repair that practices a method used to construct the article. Second, authorized sale of a patented article, or an unpatented article that necessarily will be used in an infringing combination, should exhaust rights in any patented method that the parties reasonably might have contemplated would interfere with either repair or combination of patented and unpatented elements. Finding exhaustion in these circumstances respects the policies underlying *Univis Lens*, *i.e.*, that exhaustion covers not only the vended article but also immanent uses of the article covered by a patent. As noted in *Hewlett-Packard v. Repeat-O-Type Stencil*, any other rule would enable a patent owner unfairly to obtain multiple royalties upon uses of the article contemplated

---

(Cont'd)

exhaustion and implied license. *Supra* at 10 n. 9. Second, its citation to *Univis Lens* is inapt. The Court specifically noted that the allegedly infringing lens finishers did not practice any of the patented methods, so did not need such implied license. 316 U.S. at 246-247.

at the time of sale. Moreover, any other rule would encourage patentees to evade both the exhaustion and repair doctrines through artful claim drafting.

V. The Court's Patent Exhaustion Rule Remains Essential To Robust Commerce.

The Federal Circuit has steered the patent right on a collision course with the law of patent exhaustion, permissible repair, implied license, and antitrust law. While re-establishing the primacy of this Court's precedents on patent exhaustion is vital as a matter of legal doctrine, it is equally essential to robust commerce.

Patents are ubiquitous in modern American life, from patented carpet fibers under our feet each morning to the toothbrush we use at night, from computers and cell phones we use at work to electronic entertainment products we enjoy at home. Such patents range in importance from fundamental inventions to minor improvements, but the patent laws endow each patent owner with the same panoply of rights.

Because the patent monopoly stands as a government-granted exception to laws promoting open commerce and fair competition, decisions that expand patent rights necessarily limit free commerce by others. It therefore is essential that the rights of patent owners be limited to those enumerated in the Patent Act. Consumers with title to the patented goods must have a right to resell, reuse, and repair them. Companies that compete against the patent owner must have the right to compete for the sale of supplies and the provision of services that do not reconstruct or practice the patented invention.

Consumers need to understand their full panoply of rights upon obtaining title to the property they buy. As this Court noted in a related context, total cost information in the hands of the purchaser supports robust competition in both primary markets and aftermarkets, while imperfect information tends to be exploited by would-be aftermarket monopolists.[39] The Federal Circuit imprimatur on post-sale patent restrictions deprives consumers of key information at the time of purchase as to the costs of repair and upgrade, thereby abetting unfair competition in contravention of sound economic policy.

Increasingly in modern commerce, sellers attach post-sale adhesion contracts such as shrink-wrap and electronic click-wrap agreements to goods sold and services delivered to individual and business consumers. Yet, today's electronic commerce also affords consumers greater opportunities to resell and repair their goods. Used products from small auto parts to the cars and trucks themselves are sold and resold directly to other consumers through electronic commerce sites such as ebay.com and Craig's List (not just through traditional "brick-and-mortar" stores). Any post-sale restriction that deprives consumers of their right to repair or resell articles ripples through this downstream economy. Modern commerce will be better served if patent rights are defined before title passes and exhausted upon first sale, and post-sale restrictions are subject only to contract remedies and antitrust defenses.

---

39. *See, Eastman Kodak v. Image Technical Services*, 504 U.S. at 473-476, describing how the difficulty of ascertaining total cost of ownership at the time of purchase renders end users vulnerable to supracompetitive pricing.

As a matter of public policy, lawful aftermarket commerce thrives only if the patent exhaustion doctrine leaves room for robust competition, and consumers and competitors can know in advance whether their conduct is lawful. Without a clear definition of the right to compete post-sale, the law leaves insufficient incentive to invest in products and services that complement patented goods without infringing the patent right.

Similarly, commerce will benefit from a clear rule that the sale of a patented article also exhausts any method patent to repair or use that article for its reasonably contemplated purposes. Where the patent owner produces an article using a particular method, or where repair of the article reasonably contemplates the use of the patented method, compensation upon first sale of the article inherently covers the method as well as the apparatus claims. To hold otherwise enables the patent owner unfairly to extract multiple payments for acts reasonably contemplated within the initial sale. By granting such additional leverage to the patent owner, the Federal Circuit creates anomalous results such as in *Quanta*, where those who paid compensation for licensed articles have no right to use them for their intended purpose. Clarifying that exhaustion of the vended article also exhausts method patents covering reasonably contemplated uses will provide much-needed certainty to licensees and to aftermarket competitors.

From the mid-19th century through *Univis Lens*, the Court defined in the exhaustion doctrine a clear line of demarcation between patent rights and commercial freedom. Businesses and consumers will benefit from

reaffirmation of the Court's bright-line rule that patent rights and patent infringement suits cannot be revived by post-sale conditions, for both apparatus and method patent claims.

CONCLUSION

The decision of the Federal Circuit should be reversed.

Respectfully submitted,

MICHAEL J. CONLON
CONLON, FRANTZ
& PHELAN, LLP
1818 N Street, N.W.
Suite 400
Washington, DC 20036
(202) 331-7050

Counsel for Amici Curiae
Automotive Engine Rebuilders
Association and Automotive Parts
Remanufacturers Association

SETH D. GREENSTEIN
Counsel of Record
CONSTANTINE CANNON LLP
1627 I Street N.W.
Washington, D.C. 20006
(202) 204-3500

WILLIAM H. BARRETT
STEFAN M. MEISNER
MCDERMOTT WILL
& EMERY LLP
600 13th Street N.W.
Washington, D.C. 20005
(202) 756-8000

Counsel for Amicus Curiae
International Imaging
Technology Counsel

74 878d

44pgs (17)

No. 06-937

In The

Supreme Court of the United States

Quanta Computer, Inc., Et Al.
Petitioners,

v.

LG Electronics, Inc., Et Al.
Respondents.

On Writ of Certiorari to the
United States Court of Appeals for the Federal Circuit

BRIEF OF THE BIOTECHNOLOGY INDUSTRY ORGANIZATION AS *AMICUS CURIAE* IN SUPPORT OF NEITHER PARTY

HANS SAUER
THOMAS DILENGE
BIOTECHNOLOGY INDUSTRY ORGANIZATION
1201 Maryland Ave., SW
Suite 900
Washington, DC 20024

PATRICIA A. MILLETT
(COUNSEL OF RECORD)
THOMAS C. GOLDSTEIN
MICHAEL L. KIKLIS
CHRISTOPHER R. PUDELSKI
AKIN, GUMP, STRAUSS, HAUER, & FELD, LLP
1333 New Hampshire Ave., NW
Washington, DC 20036
(202) 887-4000

November 13, 2007

WILSON-EPES PRINTING CO., INC. – (202) 789-0096 – WASHINGTON, D. C. 20002

QUESTION PRESENTED

Whether patent rights are exhausted by a licensee's authorized sale of a patented product to an authorized purchaser, where that product has no reasonable use other than in practicing the patented invention.

TABLE OF CONTENTS

QUESTION PRESENTED i

INTEREST OF *AMICUS CURIAE* 1

STATEMENT 2

SUMMARY OF ARGUMENT 9

ARGUMENT 11

THE PATENT EXHAUSTION DOCTRINE DOES NOT APPLY TO RESTRICTIONS THAT PREVENT THE MAKING OF REPLICABLE BIOLOGICAL PRODUCTS OR THAT PERMIT RESEARCH USE ONLY 12

I. The Patent Exhaustion Doctrine Does Not Authorize Purchasers To Make A Self-Replicating Product 12

II. The Patent Exhaustion Doctrine Does Not Apply To Validly Restricted Sales And Purchases 16

A. Unauthorized Sales Do Not Exhaust Patent Rights 16

B. Unauthorized Purchases Do Not Exhaust Patent Rights 19

C. Restrictions on Purchasers that Reasonably Protect the Patentee's Retained Rights While Permitting Reasonable Use of the Product Are Not Subject to the Patent Exhaustion Doctrine 21

1. Use restrictions may be necessary to protect basic patent rights 22

2. Legitimate restrictions preserve reasonable uses of the product 27

3. Contract law offers insufficient protection 29

CONCLUSION 34

TABLE OF AUTHORITIES

Cases

Adams v. *Burke*, 84 U.S. (17 Wall.) 453 (1873) 12, 23, 27

American Cotton-Tie Co. v. *Simmons*, 106 U.S. (16 Otto) 89 (1882) 12

Andrus v. *Allard*, 444 U.S. 51 (1979) 28

Aro Mfg. Co. v. *Convertible Top Replacement Co.* 365 U.S. 336 (1961) 13, 14

Aro Mfg. Co. v. *Convertible Top Replacement Co.*, 377 U.S. 476 (1964) 17, 20

Bauer & Cie v. *O'Donnell*, 229 U.S. 1 (1913) 23, 29

Bloomer v. *McQuewan*, 55 U.S. (14 How.) 539 (1853) ..... *passim*

Bloomer v. *Millinger*, 68 U.S. (1 Wall.) 340 (1864) 11, 17, 22, 32

Bonito Boats, Inc. v. *Thunder Craft Boats, Inc.*, 489 U.S. 141 (1989) 31

Boston Store of Chicago v. *American Graphophone Co.*, 246 U.S. 8 (1918) 22, 25

Brower v. *Gateway 2000, Inc.*, 246 A.D.2d 246 (N.Y. App. Div. 1998) 29

Chaffee v. *Boston Belting Co.*, 63 U.S. (22 How.) 217 (1859) 21

Diamond v. *Diehr*, 450 U.S. 175 (1981) 26

E. Bement & Sons v. *National Harrow Co.*, 186 U.S. 70 (1902) 17, 21

Cases – Continued

eBay Inc. v. *MercExchange, L.L.C.*, 126 S. Ct. 1837 (2006) 32

Ethyl Gasoline Corp. v. *United States*, 309 U.S. 436 (1940) 23

Federal Trade Comm'n v. *University Health, Inc.*, 938 F.2d 1206 (11th Cir. 1991) 32

Florida Prepaid Postsecondary Educ. Expense Bd. v. *College Sav. Bank*, 527 U.S. 627 (1999) 31

General Talking Pictures v. *Western Elec. Co.*, 305 U.S. 124 (1938) 17, 18, 19, 23

Harshberger v. *Tarrson*, 184 F.2d 628 (7th Cir. 1950) 20

Hobbie v. *Jennison*, 149 U.S. 355 (1893) 17, 19

Illinois Tool Works, Inc. v. *Independent Ink, Inc.*, 547 U.S. 28 (2006) 18

Keeler v. *Standard Folding Bed Co.*, 157 U.S 659 (1895) 30

Leitch Mfg. Co. v. *Barber Co.*, 302 U.S. 458 (1938) 23

M.A. Mortenson Co. v. *Timberline Software Corp.*, 998 P.2d 305 (Wash. 2000) 29

Mitchell v. *Hawley*, 83 U.S. (16 Wall.) 544 (1873) ..... *passim*

Monsanto Co. v. *McFarling*, 302 F.3d 1291 (Fed. Cir. 2002) 14, 15, 21

Cases – Continued

Monsanto Co. v. *McFarling*, 488 F.3d 973 (Fed. Cir. 2007), pet. for cert. pending, No. 07-241 (filed Aug. 22, 2007) 15

Monsanto Co. v. *Scruggs*, 459 F.3d 1328 (Fed. Cir. 2006), cert. denied, 127 S. Ct. 2062 (2007) 15

Motion Picture Patents Co. v. *Universal Film Mfg. Co.*, 243 U.S. 502 (1917) 23

Mycogen Plant Sci., Inc. v. *Monsanto Co.*, 61 F. Supp. 2d 199 (D. Del. 1999), aff'd, 243 F.3d 1316 (Fed. Cir. 2001) 7

Nachman Spring-Filled Corp. v. *Kay Mfg. Corp.*, 78 F.2d 653 (2d Cir. 1935) 12

ProCD, Inc. v. *Zeidenberg*, 86 F.3d 1447 (7th Cir. 1996) 29

Providence Rubber Co. v. *Goodyear*, 76 U.S. (9 Wall.) 788 (1869) 17

Simpson v. *Union Oil Co.*, 377 U.S. 13 (1964) 13

Straus v. *Victor Talking Mach. Co.*, 243 U.S. 490 (1917) 23, 29

Union Tool Co. v. *Wilson*, 259 U.S. 107 (1922) 20, 29

United Shoe Mach. Corp. v. *United States*, 258 U.S. 451 (1922) 17

United States v. *General Elec. Co.*, 272 U.S. 476 (1926) 19, 20, 21

Cases – Continued

United States v. *Masonite Corp.*, 316 U.S. 265 (1942) 28

United States v. *Univis Lens Co.*, 316 U.S. 241 (1942) ..... *passim*

Statutes

35 U.S.C. 154(a) 12

35 U.S.C. 271(a) 16

35 U.S.C. 281 32

35 U.S.C. 283-285 32

Other Authorities

2 Jay Dratler, *Licensing of Intellectual Property* (2007) 25, 26

Department of Agriculture, *Frequently Asked Questions on Biotechnology*, http://www.usda.gov/wps/portal/!ut/p/_s.7_0_A/7_0_1OB?contentidonly=true&navid=AGRICULTURE&contentid=BiotechnologyFAQs.xml (Oct. 6, 2005) 8

Federal Trade Comm'n, *To Promote Innovation: The Proper Balance of Competition and Patent Law and Policy* (Oct. 2003), ... *passim*

Francis S. Collins, *et al.*, A Vision for the Future of Genomics Research, NATURE, Apr. 24, 2003 2

Other Authorities – Continued

Joseph A DiMasi & Henry G. Grabowski, *The Cost of Biopharmaceutical R&D: Is Biotech Different?*, MANAGERIAL & DECISION ECONOMICS 473 (2007) 5

Mayo Clinic Staff, *Personalized Medicine: Tailoring Treatment To Your Genetic Profile*, http://www.mayoclinic.com/health/personalized-medicine/CA00078 (Jun. 30, 2006) 3

National Institute of Health: *Moving Research from the Bench to the Bedside: Hearings Before the Subcomm. On Health of the House Comm. on Energy and Commerce*, 108th Cong., 1st Sess. 47 (2003) 4

Nicholas Wade, *A Revolution At 50; DNA Changed the World. Now What?*, New York Times, Feb. 25, 2003, at F1 3

PG Economics, Graham Brookes & Peter Barfoot, *Plant Biotechnology Proven Promising* at 1 (Oct. 11, 2005) 3

Robert Bazell, *Her-2: The Making of Herceptin, A Revolutionary Treatment for Breast Cancer* (1998) 7

Stifling or Stimulating – The Role of Gene Patents in Research and Genetic Testing, Hearing Before the Comm. on the Judiciary Subcomm. on Courts, the Internet and Intellectual Property (Oct. 30, 2007) 4

Other Authorities - Continued

Tommy Thompson (Secretary of Health & Human Services), *Biotechnology: Its Promise and Challenge in the New Century*, http://www.hhs.gov/news/speech/2002/020211. html (Feb. 11, 2002) 3

In The Supreme Court of the United States

No. 06-937

QUANTA COMPUTER, INC., ET AL., PETITIONERS

v.

LG ELECTRONICS, INC., ET AL.

On Writ of Certiorari to the United States Court of Appeals for the Federal Circuit

BRIEF OF THE BIOTECHNOLOGY INDUSTRY ORGANIZATION AS *AMICUS CURIAE* IN SUPPORT OF NEITHER PARTY

INTEREST OF *AMICUS CURIAE*[1]

The Biotechnology Industry Organization (BIO) is the principal trade association representing the biotechnology industry both domestically and abroad. BIO has more than eleven hundred members, including businesses, biotechnology centers, and academic institutions. BIO's members range from Fortune 500 companies to research universities and small start-up companies. Approximately 90% of BIO's corporate members have annual revenues under $25 million. In developing

[1] This brief is filed with the written consent of all parties. Pursuant to Rule 37.6, no counsel for either party authored this brief in whole or in part, nor did any party make a monetary contribution to the preparation or submission of this brief.

modern biotechnological products, BIO's members depend on generating, developing, patenting, licensing, and selling scientific innovations. As a result, the maintenance of a stable commercial system that, consistent with the patent system's goal of promoting science, permits the imposition of valid conditions on the sale and licensing of patented products is critical to the industry. BIO thus has a substantial interest in this Court's resolution of the patent exhaustion question, and BIO can provide unique insights on the operation of the patent exhaustion doctrine in practice and its impact on the rapidly growing biotechnology industry.

STATEMENT

Biotechnology innovations provide life-saving medical treatments and diagnostic procedures, disease- and herbicide-resistant crops, and a host of promising scientific solutions for modern environmental, medical, and agricultural challenges. For example, biotechnology products have provided more than 200 new therapies and vaccines for once untreatable diseases, such as cancer, diabetes, HIV/AIDS, and autoimmune disorders. Biotech research tools also made it possible to discover the complete sequence of the human genome, an extraordinary feat accomplished within fifty years after the structure of DNA was first discovered. See Francis S. Collins, *et al.*, *A Vision for the Future of Genomics Research*, NATURE, Apr. 24, 2003, at 835-847. Combining that knowledge of the human genetic makeup with specially-adapted biotech research methods has made it possible to develop rapid and reliable diagnostic tests for a multitude of genetic diseases, as well as forensic DNA tests that

help free the innocent and jail the guilty. Nicholas Wade, *A Revolution At 50; DNA Changed the World. Now What?*, New York Times, Feb. 25, 2003, at F1. Biotechnology research also holds the promise of developing "personalized medicine," in which specialized biotech research tools will permit the affordable sequencing of an individual's own unique genetic code to enable customized medical treatments that are cheaper and more effective than the current "one-size-fits-all" approach. See Mayo Clinic Staff, *Personalized Medicine: Tailoring Treatment To Your Genetic Profile*, http://www.mayoclinic.com/health/personalized-medicine/CA00078 (Jun. 30, 2006) (as visited Nov. 12, 2007).

Biotechnology products have also achieved significantly enhanced agricultural production by creating crop seeds that are more productive because they are resistant to insects and/or herbicides. In their first nine years, biotech foods increased farm income in the United States by $10.7 billion and, at the same time, significantly reduced the need for herbicides and thus the environmental impact of food production by as much as 32% for some crops.[2] In addition, crops are being developed that will grow under adverse conditions such as water or nitrogen deficiency. Indeed, "[b]iotech foods could improve food yields by up to 25 percent in the developing world and feed the more than three billion people to be born in the next three decades."[3]

---

[2] See PG Economics, Graham Brookes & Peter Barfoot, *Plant Biotechnology Proven Promising* at 1 (Oct. 11, 2005).

[3] Tommy Thompson (Secretary of Health & Human Services), *Biotechnology: Its Promise and Challenge in the New*

Every day, biotechnology companies are engaged in inventing, discovering, and developing new tests, new drugs, new cures, and new products. See Federal Trade Comm'n, *To Promote Innovation: The Proper Balance of Competition and Patent Law and Policy (FTC Report)*, Ch. 3, p. 21 (Oct. 2003), available at http://www.ftc.gov/os/2003/10/innovationrpt.pdf (as visited Nov. 12, 2007) (noting the exceptionally "rapid" "pace of innovation in the biotechnology industry"). Those innovations require a massive investment in research and development. "The biotechnology industry is the most research and development-intensive and capital-focused industry in the world."[4] Biotechnology research and development expenditures are more than double the average of the pharmaceutical industry, which itself is several times more intensive than any other industry. See *id.* at pp. 15-16. In 2005 alone, the industry spent approximately $20 billion in research and development efforts.[5]

The research and development process "is particularly lengthy for biotechnology firms, because biotechnology innovation is more uncertain than innovation in other industries." *FTC Report*, Ch. 3, p

---

Century, http://www.hhs.gov/news/speech/2002/020211.html (Feb. 11, 2002) (as visited Nov. 12, 2007).

[4] See National Institute of Health: *Moving Research from the Bench to the Bedside: Hearings Before the Subcomm. On Health of the House Comm. on Energy and Commerce*, 108th Cong., 1st Sess. 47 (2003) (testimony of Phylliss Gardner, M.D.).

[5] See *Stifling or Stimulating – The Role of Gene Patents in Research and Genetic Testing*, Hearing Before the Comm. on the Judiciary Subcomm. on Courts, the Internet and Intellectual Property, at 3 (Oct. 30, 2007) (testimony of Jeffrey P. Kushan).

16. For every successful biopharmaceutical, there are approximately 10,000 failed attempts. Furthermore, the time required to move a drug from clinical development through regulatory approval and into the market averages 98 months.[6]

Bringing biotechnological advancements to market for use by doctors, patients, scientists, and farmers, often requires extensive and long-term collaboration between large and small biotechnology companies and research universities. For example, a university scientist might discover a new protein linked to certain cancers. After patenting the relevant technology, the university might then license a biotech business or university spin-off company to begin the time-intensive process of developing standardized tools for further research, as well as diagnostic methods, therapeutic treatments, and other real-world applications for the discovery.

Such licensing arrangements are mutually beneficial. They provide the licensee the exclusive rights needed to attract capital for research and development, while providing the university with revenue to support further academic research. Due to the speculative nature of early-stage biotechnology, such licensing fees are generally low. Over time, however, research and development can add significant value to the patented technology. The licensee, for example, may decide first to develop a standardized cell-culture system that allows for the

---

[6] See Joseph A DiMasi & Henry G. Grabowski, *The Cost of Biopharmaceutical R&D: Is Biotech Different?*, MANAGERIAL & DECISION ECONOMICS 473 (2007).

reliable production of the new protein under laboratory conditions, together with a novel antibody that binds to the protein and allows for its detection and quantification. Because such standardized technology is useful for research, the biotechnology company may decide to make the cell-culture system and detection method widely available at low cost only to researchers, thus fostering dissemination of the technology, while creating a small revenue stream to support further development efforts. As the technology becomes more widely adopted and scientifically validated, specialized biotechnology companies might join the research and development process, subject to bargained-for conditions that reflect the value of the licensed technology for the specific use (research or diagnostic) to which they will put the product. Should useful applications be further identified, larger companies with greater resources would enter the process to shoulder, at staggering cost, the burden of developing a new therapeutic product.

That symbiotic relationship between different entities engaged in biotechnological research and development is crucial both to ensuring the continued viability of small and publicly funded biotechnology research entities, which cannot afford expensive licensing fees or sale prices, and to making it possible for inventors to navigate successfully the long and resource-intensive road to the commercial use of their products. For example, the identification and isolation of a gene associated with a particularly aggressive and common type of breast cancer, and the development of a patented drug to treat it, cost more than $200 million and took nearly two decades

of cooperative research by companies and a university.[7]

In addition, the products that biotechnology companies often patent – many of which involve live organisms or living matter, rather than the inanimate products traditionally patented – require sensitive application of the patent laws. For example, many of the important advances in medical and agricultural biotechnology, such as cell lines, DNA sequences, or transgenic seed, involve DNA, which self-replicates through the ordinary process of cell division, but is also routinely capable of artificial replication. As a result, the manufacture and further transfer of self-replicating products are often prohibited and restricted to use in research. Absent such a restriction, the first sale – which is often for a reduced price to permit universities and small companies to participate in research – would effectively extinguish the patentee's rights, because the purchaser would obtain, in effect, a never-ending supply of the product that it could use, sell, and market in competition with the patentee.

Likewise, transgenic seed is produced when a genetic sequence is artificially introduced into a naturally occurring seed to create a particular trait, such as drought-, disease-, or insect-resistance. See generally *Mycogen Plant Sci., Inc.* v. *Monsanto Co.*, 61 F. Supp. 2d 199, 207-209 (D. Del. 1999), aff'd, 243 F.3d 1316 (Fed. Cir. 2001). Such seeds create more bountiful crops, which increase food supply, while

---

[7] See Robert Bazell, *Her-2: The Making of Herceptin, A Revolutionary Treatment for Breast Cancer* xvii, 33, 38, 48, 54, 88 (1998).

often reducing the environmental impact of production (by, for example, reducing the need for insecticides). Like DNA, however, transgenic seeds self-replicate during the crop cycle. Restrictions on the use or production of those second-generation seeds are indispensable to continued research and development in the agricultural area.[8]

The linchpin of biotechnology development has been the legal protections afforded to intellectual property under United States law. Patents have become the primary asset – often the lifeblood – of biotechnology companies. *FTC Report*, Ch. 3, p. 29 ("Biotechnology innovation is heavily dependent on the patent rights that have been available for biotechnology inventions since 1980."). In addition, billions of dollars in business decisionmaking and investment have been made predicated on patent law protection for the biotechnology products that are developed. See *id.* at p. 15. "[P]atentability of biotech inventions enables the biotechnology industry to attract venture capital," and that capital "enables not-yet-profitable companies to sustain * * * innovation through massive investments in research and development." *Id.* at p. 18. The promise of enforceable patent rights that are not undermined by the involvement of multiple entities in the research process is critical to ensuring that discoveries and

---

[8] In 2004, 85% of the soybeans, 76% of the cotton, and 46% of the corn that was planted involved biotechnologically improved seed. Department of Agriculture, *Frequently Asked Questions on Biotechnology*, http://www.usda.gov/wps/portal/!ut/p/_s.7_0_A/7_0_1OB?contentidonly=true&navid=AGRICULTURE&contentid=BiotechnologyFAQs.xml (Oct. 6, 2005) (as visited Nov. 12, 2007).

innovations can financially survive the lengthy development, testing, approval, and marketing process. See *id.* at p. 15 ("Biotechnology companies seek patent protection to appropriate the value of their inventions, to attract investment from capital markets, which funds their costly research, and to facilitate inter-firm relationships necessary for commercial development of their inventions.").

SUMMARY OF ARGUMENT

Because the licensing and sales practices within the biotechnology industry involve distinctive considerations, the Biotechnology Industry Organization does not take a position on the proper disposition of this case. Instead, the purpose of this brief is (i) to advise the Court about one particularly important and complex context in which patent exhaustion arguments arise, (ii) to highlight the legal distinctions between the biotechnology industry's practices and those at issue here, (iii) to suggest that, should the Court hold that patent exhaustion applies, the decision should be limited to the type of practice before the Court and should not address different legal arrangements, and (iv) to explain the adverse implications of a sweeping patent exhaustion rule for an industry that works cooperatively with public universities and other research entities (many of which have limited financial resources) to develop cutting edge technology to treat diseases and to feed a hungry world.

First, unlike respondent LG Electronics (LGE), one central concern of the biotechnology industry is not restricting "use" of the patented product per se, but prohibiting purchasers from "making" the

patented product by, for example, exploiting an item's self-replicating character. The patent exhaustion doctrine has never extended to the manufacturing of a patented product, and this Court's decision should reinforce that distinction.

Second, the biotechnology industry commonly restricts the authority of licensees to sell their products and may also require purchasers themselves to be licensed. Nothing in this case should call into question the patent law's longstanding distinction between the patentee's authority to restrict licensees and its authority to restrict eligible purchasers.

Third, when restrictions are imposed on purchasers, such as "for research use only" or to constrain the use of second-generation products, the biotechnology industry does not attempt to restrict a buyer's only reasonable use of a product. The restrictions only proscribe alternative uses, such as commercial uses that the buyer "does not purchase or pay for," *Bloomer* v. *McQuewan*, 55 U.S. (14 How.) 539, 549 (1853). Restrictions on usage that do nothing more than enforce rights in the property that were not sold, while affording the purchaser the full benefit of its bargain, should be sustained.

Fourth, because biotechnology products often require years of research and development, early licenses and sales often do not reflect the ultimate value of the invention, but instead are a cooperative nominal exchange designed to promote further research. Likewise, with self-replicating products, the sale price of the first item sold – a single vial of genetically modified cells or a single packet of seeds – cannot capture the patentee's fair reward for

painstakingly developing the product. The patent law's current level of protection for such inventions has made enormous innovation possible in the last two decades, and the patent exhaustion doctrine should accommodate the unique demands of modern technological development.

ARGUMENT

Under the patent exhaustion doctrine, the general rule is that the purchaser of a patented product obtains "the right to use and sell it, and upon familiar principles the authorized sale of an article which is capable of use only in practicing the patent is a relinquishment of the patent monopoly with respect to the article sold." *United States* v. *Univis Lens Co.*, 316 U.S. 241, 249 (1942); see *Bloomer* v. *Millinger*, 68 U.S. (1 Wall.) 340, 352 (1864). That is because "the purpose of the patent law is fulfilled with respect to any particular article when the patentee has received his reward for the use of his invention by the sale of the article," and "once that purpose is realized the patent law affords no basis for restraining the use and enjoyment of the thing sold." *Id.* at 251.

While the patent exhaustion rule can be stated simply, care must be taken in its application to the complex and diverse arrangements that pervade patent law and that make modern technological advancement possible. The doctrine's limits must be respected and enforced as much as its core. The central purpose of patent exhaustion is to prevent overreaching by patentees who attempt to cling to rights they have already surrendered or to assume authority that the patent law never granted to them.

However, controls put in place by patentees that do nothing more than give effect to the patentee's retained rights, while giving the purchaser fair use of the product, should be permitted.

THE PATENT EXHAUSTION DOCTRINE DOES NOT APPLY TO RESTRICTIONS THAT PREVENT THE MAKING OF REPLICABLE BIOLOGICAL PRODUCTS OR THAT PERMIT RESEARCH USE ONLY

I. The Patent Exhaustion Doctrine Does Not Authorize Purchasers To Make A Self-Replicating Product

The Patent Act protects the patentee's exclusive right not only to "us[e]" the invention, but also to "mak[e]" it. 35 U.S.C. 154(a). Consistent with that distinction, patent law has long established that the authorized *use* of a patented product does not authorize the *making* of the product. "[T]he purchaser of the implement or machine for the purpose of using it in the ordinary pursuits of life * * * does not acquire any right to construct another machine either for his own use or to be vended to another for any purpose." *Mitchell* v. *Hawley*, 83 U.S. (16 Wall.) 544, 548 (1873).[9] Rather, "[t]he right to

---

[9] See *American Cotton-Tie Co.* v. *Simmons*, 106 U.S. (16 Otto) 89, 94 (1882) (reconstruction infringes patent); *Adams* v. *Burke*, 84 U.S. (17 Wall.) 453, 456 (1873) (the right to "make" and the right to "use" "may be granted or conferred separately by the patentee"); *Nachman Spring-Filled Corp.* v. *Kay Mfg. Corp.*, 78 F.2d 653, 657 (2d Cir. 1935) ("The sale by a patentee of an element of the patented combination capable of noninfringing use does not carry the right to make an infringing structure.")

manufacture, the right to sell, and the right to use are each substantive rights, and may be granted or conferred separately by the patentee." *Simpson* v. *Union Oil Co.*, 377 U.S. 13, 24 (1964). The patent exhaustion doctrine tracks that distinction. Exhaustion is limited to the purchaser's right to use and sell the product, and does not extend to the patentee's right to "make a new article." *Aro Mfg. Co.* v. *Convertible Top Replacement Co. (Aro I)*, 365 U.S. 336, 343 (1961).[10]

Preserving the rule that patent exhaustion law does not extend to the making of patented products is of critical importance to the biotechnology industry. When DNA, cell lines, gene sequences, and crop seeds are licensed or sold, they have the capacity to self-replicate in the hands of the licensee or purchaser. With respect to seeds, while the patent exhaustion doctrine may give the purchaser full rights to *use* the seeds actually purchased, the patentee's rights are not exhausted with respect to the second-, third-, fourth-, or nth-generation of seeds that might be *made* by the purchaser. Where exhaustion applies, the patent monopoly is relinquished only "with respect to the article sold," *Univis*, 316 U.S. at 249, and not with respect to copies of it that the purchaser might make.

Similarly, with respect to cell lines, bacteria, or DNA preparations, the patentee may grant the

---

[10] See also *Univis*, 316 U.S. at 249 (purchaser acquires the "right to use and sell"); *Bloomer* v. *McQuewan*, 55 U.S. (14 How.) 539, 549 (1853) (explaining the "distinction" between "the right to make and vend the machine * * * [and] the right to use it").

researcher the right to use the biological material for research purposes, which will often necessitate its replication in the laboratory for a number of cycles. While the patentee may permit such uses for research purposes, the patentee retains the right to preclude licensees and purchasers from replicating – making – such material for different purposes, such as diagnostic, therapeutic, or prophylactic applications, or to engage in commercial competition. Thus, even where a purchase has exhausted the patentee's right to research uses of a particular cell line, the purchaser's replication or "second creation of the patented entity" will "call the monopoly conferred by the patent grant[] into play for a second time," *Aro I*, 365 U.S. at 346, thereby permitting the imposition of "research use only" restrictions on the replicated product.

That distinction makes sense, and is not disputed by petitioners (Pet. Br. 28-29, 43 n.13). The patentee only sold the first generation of seeds or the research uses of its replicating cell lines, and that is all that was paid for by the purchaser. The patentee could not have sold and the purchaser could not have acquired unrestricted title over the subsequent generations because those were not part of the bill of sale and, in fact, did not even exist at the time of the purchase. See *Monsanto Co.* v. *McFarling*, 302 F.3d 1291, 1299 (Fed. Cir. 2002) ("The original sale of the seeds did not confer a license to construct new seeds."), cert. denied, 537 U.S. 1232 (2003).[11]

---

[11] See *McFarling*, 302 F.3d at 1299 ("The 'first sale' doctrine of exhaustion of the patent right is not implicated, as the new seeds grown from the original batch had never been

Likewise, because the patentee retains the right to preclude the unauthorized making of its product, the patentee can reasonably proscribe the manufacture (through replication) and sale of its cell lines for commercial purposes while permitting publicly beneficial, non-commercial research to go forward. "The fact that a patented technology can replicate itself does not give a purchaser the right to use replicated copies of the technology," and "[w]ithout the actual sale of the second generation * * *, there can be no patent exhaustion." *Monsanto Co.* v. *Scruggs*, 459 F.3d 1328, 1336 (Fed. Cir. 2006), cert. denied, 127 S. Ct. 2062 (2007).

The line between using and making can be a fine one in the case of self-replicating products, and one that could be undermined by adoption of an unnecessarily expansive patent exhaustion rule. Petitioners, for their part, acknowledge that the patent exhaustion issue could have implications for self-replicating products like computer software, see Pet. Br. 43 n.13, and do not dispute the validity of restrictions designed to protect the patentee's rights. Pet. 8, 26. Indeed, to argue otherwise "would eviscerate the rights of the patent holder," while giving an unjustifiable windfall to purchasers. *Scruggs*, 459 F.3d at 1336. Because the potential for replication inheres in these unique products, the patentee cannot sell the product for its ordinary use – medical testing and research or production of a crop –

---

sold. The price paid by the purchaser 'reflects only the value of the "use" rights conferred by the patentee.'"); see also *Monsanto Co.* v. *McFarling*, 488 F.3d 973, 977 (Fed. Cir. 2007), pet. for cert. pending, No. 07-241 (filed Aug. 22, 2007).

without simultaneously arming the purchaser with the ability to take over independent production of the cells or seeds – a privilege for which the purchaser did not pay and to which *purchasers* are not entitled. Accordingly, this Court's decision should leave undisturbed the longstanding rule that patent exhaustion does not preclude restrictions on the making or re-creation of a patented product.

II. The Patent Exhaustion Doctrine Does Not Apply To Validly Restricted Sales And Purchases

Patent exhaustion has two prerequisites: the sale must be authorized, and the purchaser must be authorized to buy. If either the sale or purchase was "without authority," then using or vending the patented product will constitute infringement of the patent. 35 U.S.C. 271(a). There thus are three scenarios that preclude application of the patent exhaustion doctrine: (1) the sale was not authorized, (2) the purchaser lacked authority to buy, or (3) the buyer violated a restriction on alternative uses of the product that was reasonably imposed and necessary to enforce rights within the scope of the patent.

A. Unauthorized Sales Do Not Exhaust Patent Rights

There is no dispute in this case that an unauthorized sale does not deprive the patentee of its rights (see Pet. Br. 18), nor could there be. If the sale is made without authority, it cannot confer any rights on the purchaser, because a seller cannot transfer rights that it does not possess. See *Aro Mfg. Co.* v. *Convertible Top Replacement Co. (Aro II)*, 377 U.S. 476, 484 (1964); *General Talking Pictures Corp.* v.

Western Elec. Co., 305 U.S. 124, 127 (1938); *Mitchell*, 83 U.S. at 549 ("[N]o one can convey in such a case any better title than he owns.").

In the biotechnology industry (and industry generally), patentees often license others to sell a patented product for them. In so doing, the patentee can restrict the licensee's authority to sell the product generally or for particular uses, and products sold in violation of those agreed-upon terms will not trigger patent exhaustion. In that respect, patent law has long distinguished between licensees and purchasers. See, *e.g.*, *United Shoe Mach. Corp.* v. *United States*, 258 U.S. 451, 463 (1922) ("Undoubtedly the patentee has the right to grant the use of the rights or privileges conferred by his patent to others by making licenses and agreements with them which are not in themselves unlawful."); *Millinger*, 68 U.S. at 351. As against a licensee, the patentee may continue to exercise its exclusive rights by reasonably restricting up front the licensee's ability to use, make, or sell the product. See *General Talking Pictures*, 305 U.S. at 127 ("That a restrictive license is legal seems clear."). A patentee also "may legally restrict a licensee to a particular field and exclude him from others." *Id.* at 126.[12]

---

[12] See also *General Talking Pictures*, 305 U.S. at 127 ("The practice of granting licenses for a restricted use is an old one.") (citing *Providence Rubber Co.* v. *Goodyear*, 76 U.S. (9 Wall.) 788, 799-800 (1869)); *E. Bement & Sons* v. *National Harrow Co.*, 186 U.S. 70, 93 (1902); *Hobbie* v. *Jennison*, 149 U.S. 355, 363 (1893); cf. *Illinois Tool Works, Inc.* v. *Independent Ink, Inc.*, 547 U.S. 28 (2006) (tying arrangements imposed on licensees are not presumptively impermissible).

In the case at hand, Intel had the unrestricted authority to sell components embodying the essential elements of LGE's patent. Pet. App. 33a. The biotechnology industry, by contrast, typically imposes restrictions on the ability of a licensee to sell the patented product. For example, a university may license one biotechnology company to sell a patented antibody only to research scientists, and another biotechnology company to sell the same antibody only to diagnostic test laboratories. In addition, a biotechnology company that has developed a chemical process for improving the blight resistance of crop seed may license a seed company to produce and sell the enhanced seed to farmers. Such licenses frequently contain field of use restrictions that limit the uses for which the licensee may sell the patented article. Common restrictions include requirements that the product be used only for non-commercial research, not be used for human use, or be used for planting only a single generation of crops.

Such licensing restrictions fully comport with patent law. "[W]here a patented invention is applicable to different uses, the owner of the patent may legally restrict a licensee to a particular field and exclude him from others." *General Talking Pictures*, 305 U.S. at 126. Likewise, restrictions on licensee sales that protect the patentee's interest in second-generation seeds, or in commercial, as opposed to non-commercial research-based exploitation of patented biotechnology products are permissible. That is because such restrictions "are normally and reasonably adapted to secure pecuniary reward for the patentee's monopoly." *United States* v. *General Elec. Co.*, 272 U.S. 476, 490 (1926). Sales

made in violation of such restrictions on the licensee's authority infringe the patent, and relief may be obtained against both the licensee and the purchaser. *General Talking Pictures*, 305 U.S. at 127; see *General Elec.*, 272 U.S. at 490; *Hobbie* v. *Jennison*, 149 U.S. 355, 363 (1893). Purchasers, "however innocent they may be, obtain no property whatever in the goods." *Mitchell*, 83 U.S. at 550.

Neither petitioner nor the government disputes that the patent exhaustion doctrine applies only to authorized sales, Pet. Br. 16-17, 29; U.S. Cert. Amicus Br. 7-8, 13, and this Court's cases have endorsed the doctrine's inapplicability in that context for over two centuries. See, *e.g.*, *General Elec.*, *supra*; *Mitchell*, *supra*.; *McQuewan*, *supra*. Maintaining stability in that body of law is important to the biotechnology industry because business arrangements and investments have been made in reliance on that legal principle for decades. See *FTC Report*, Ch. 3, p. 17 (the biotechnology industry involves "a tremendous amount of licensing").

B. Unauthorized Purchases Do Not Exhaust Patent Rights

For many of those same reasons, the patent exhaustion doctrine applies only to the use of a product by a person who was authorized to acquire it. Indeed, the restrictions on sales by licensees that this Court upheld in *General Electric* and *Mitchell* would be meaningless unless those conditions could be enforced against purchasers who buy without authority to do so. See *Aro II*, 377 U.S. at 484-485 (infringement by car purchasers who bought automobiles embodying a patent without authority).

Thus, restrictions on who may purchase a product that are "normally and reasonably adapted" to protecting the patentee's legitimate interest in fair compensation are permissible, and violators of those restrictions cannot seek refuge in the patent exhaustion doctrine.[13]

In the present case, there was no express restriction on who could purchase the computer parts. Pet. Br. 41. Instead, LGE simply required Intel to notify customers of its view that its patent rights continued in the product. Pet. App. 3a. Regardless of whether such a notice constitutes a valid restriction on authorized purchasers, the types of limitations on authorized purchasers imposed by the biotechnology industry are consistent with this Court's precedent and are not subject to the patent exhaustion doctrine.

Like the computer software industry, which requires that its purchasers become licensees to protect against the threat of replication, see Pet. 26, the biotechnology industry sometimes permits the sale of its patented products only to individuals or entities that have a license with the patentee. For example, to protect against unauthorized replication, only farmers directly licensed by the patentee are permitted to purchase transgenic grains and seeds. See *McFarling*, 302 F.3d at 1293.

---

[13] See *General Elec.*, 272 U.S. at 490; *Mitchell*, 83 U.S. at 550; *Harshberger* v. *Tarrson*, 184 F.2d 628, 629 (7th Cir. 1950); see also *Union Tool Co.* v. *Wilson*, 259 U.S. 107, 113 (1922).

Those sales to licensees do not trigger patent exhaustion, as petitioners acknowledge (Br. 51). First, transfers to licensees generally are not subject to patent exhaustion. See *General Elec.*, 272 U.S. at 489-490; *E. Bement & Sons* v. *National Harrow Co.*, 186 U.S. 70, 93 (1902). Indeed, the very purpose of a license is to maintain the patentee's core rights, not to exhaust them. There is no sound basis for distinguishing, in that regard, between licenses to vend and licenses to acquire.

Second, exchanges of a patented product between a patentee and a licensee, between two licensees for the same product, or between a licensee and a sublicensee (where the patentee is the third-party beneficiary) bear no resemblance to the type of arms-length sales with independent purchasers that give rise to the patent exhaustion doctrine, see, *e.g.*, *Chaffee* v. *Boston Belting Co.*, 63 U.S. (22 How.) 217 (1859); *McQuewan*, 55 U.S. at 549-550. Such inter-licensee exchanges are more accurately characterized as transfers subject to established patent-law rules for licenses, than "sales" for purposes of the patent exhaustion doctrine.

C. Restrictions on Purchasers that Reasonably Protect the Patentee's Retained Rights While Permitting Reasonable Use of the Product Are Not Subject to the Patent Exhaustion Doctrine

Where the purchaser is not a licensee, the parties have taken diametrically opposed positions concerning a patentee's ability to restrict usage. Petitioners would permit virtually no restrictions on

purchasers, Pet. Br. 20, 30-35, while respondents would forbid only those restrictions that amount to illicit anti-competitive behavior or patent misuse, Br. in Opp. 15-20. The position of the biotechnology industry lies in the middle. Restrictions that (i) are reasonably necessary to protect the patentee's legitimately reserved patent right, and (ii) do not deny the purchaser reasonable use of the product, may be imposed, consistent with this Court's precedent and the purposes of patent exhaustion.

1. Use restrictions may be necessary to protect basic patent rights

This Court has not held that *all* restrictions on purchasers are invalid under the patent exhaustion doctrine. Of course, where the sale is unconditional, patent exhaustion applies. See *Mitchell*, 83 U.S. at 548 (exhaustion applies "where the sale is absolute, and without any conditions"); *Millinger*, 68 U.S. at 350 (1863); *McQuewan*, 55 U.S. at 539 (machines had "been purchased and paid for without any limitation").

Likewise, where the restriction that the patentee imposed reaches beyond the legitimate scope of the patent right, patent exhaustion has been applied. This Court has applied the patent exhaustion doctrine to invalidate the anticompetitive regulation of downstream prices.[14] The Court has

---

[14] See *Univis*, 316 U.S. at 252 (noting that "[t]he price fixing features of appellees' licensing system * * * violate the Sherman Act"); *Boston Store of Chicago* v. *American Graphophone Co.*, 246 U.S. 8, 25 (1918); *Bauer & Cie* v. *O'Donnell*, 229 U.S. 1, 16-17 (1913); *Straus* v. *Victor Talking Mach. Co.*, 243 U.S. 490, 500-510 (1917).

also freed buyers from restrictions unreasonably requiring the exclusive use of non-patented materials that "have nothing to do with the invention which is patented," *Motion Picture Patents Co.* v. *Universal Film Mfg. Co.*, 243 U.S. 502, 512 (1917),[15] and has further held that patentees may not geographically restrict where a patented product may be used after it is bought, *Adams* v. *Burke*, 84 U.S. (17 Wall.) 453, 456-457 (1873).

Such restrictions are invalid because they "cannot with any regard to propriety in the use of language be termed a restriction upon the use of the machine itself," *Motion Picture Patents*, 243 U.S. at 512-513, and to permit them would "in effect, extend the scope of [the] patent monopoly," *id.* at 516. See *Univis*, 316 U.S. at 251 (stipulation regarding resale prices "derives no support from the patent"). Thus, the common flaw in restrictions that this Court has struck down has been the patentee's effort "to control conduct * * * not embraced in the patent monopoly," and to control the use of property "outside of the monopoly." *Ethyl Gasoline Corp.* v. *United States*, 309 U.S. 436, 456 (1940).

But this Court has never held that a restriction on purchasers that is necessary to secure "the reward which the patentee by the grant of the patent is entitled to secure," *General Talking Pictures*, 305 U.S. at 127, is unenforceable and subject to patent exhaustion. Petitioners themselves acknowledge (Pet. Br. 26) that "patent exhaustion

---

[15] See *Leitch Mfg. Co.* v. *Barber Co.*, 302 U.S. 458, 461-463 (1938).

stems from inherent limits on the grant of the patent right." Accordingly, limited restrictions on use that fall within the scope of the patent right – such as restrictions limiting the replanting of subsequent generations of transgenic seed, or the use of biotechnology research products for commercial purposes – should not be subject to exhaustion. That is because such restrictions do not seek to extend a patentee's authority beyond its ordinary scope or to amass rights and privileges that are not within the four corners of the patent right. Nor do they seek to regulate downstream prices, to collect repeated and unearned royalties, to compel the purchase of unpatented products through unlawful tying arrangements, or to delimit uses geographically.

Rather, restrictions like those imposed in the biotechnology area – restrictions that simply enforce legitimate rights to prohibit the unauthorized making (as opposed to the use) of the product, or that limit the field of use to research – reflect archetypically legitimate exercises of the patent power. They seek only to reserve for the patentee rights that the law has already granted it and to ensure a fair reward for inventions that require years of research, development, and investment.[16] The patent exhaustion doctrine was designed to police the efforts of patentees to expand their rights *beyond* what patent law grants them, not to hamstring

---

[16] See 2 Jay Dratler, *Licensing of Intellectual Property*, at 7-50 (2007) ("[F]ield-of-use restraints are attempts by the patentee to extract the full value of the patented invention from its various market applications; they often have little or no adverse effect on competition.").

legitimate efforts to enforce rights within the scope of patent protection. See *Boston Store*, 246 U.S. at 25 (patent law should not "deprive[] an inventor of any right coming within the patent monopoly"); *id.* at 26 (cases invalidating restrictions "alone concerned whether the monopoly of the patent law can be extended beyond the scope of that law").

Furthermore, the imposition of reasonable restrictions on purchases is a practical, unavoidable, and "genuine necessity" for the biotechnology industry. 2 Jay Dratler, *Licensing of Intellectual Property*, at 7-60 (2007). Due to the capacity for self-replication, the only alternative to regulating how new cycles of cells or generations of seeds are used would be to charge exorbitantly high prices for the sale of a single vial of cells or packet of seeds. But the market simply will not bear that price and, absent the ability to recoup the lengthy and resource-intensive costs incurred in bringing biotechnology products to market, the industry will lose all reasonable incentive to continue the rapid technological development that has occurred in this area.[17]

Similarly, reasonable field-of-use restrictions on research tools, such as cell lines, nucleic acid preparations, and antibodies, provide research institutions with low-cost access to patented technology, thus spurring more research and

---

[17] See *FTC Report*, Ch. 3, p. 29 ("Patents help firms to recover high, fixed R&D costs and are particularly useful in enabling biotechnology companies, which are generally small in size, to attract capital investment and to contract with other firms for commercial development of their inventions.").

fostering the adoption, validation, and acceptance of the patented technology in the research community. In short, the practical realities of biotechnology constitute "a case of use control by necessity" because, without those restrictions, the patentee is "unlikely to recoup its development costs – let alone make the open-ended profit that serves as an incentive for innovation." 2 Dratler, *supra*, at 7-54.

Moreover, even if the market could, in some respect, adjust to a new economic framework, publicly funded research entities and small biotechnology companies – which have been central players in the biotechnology boom, *FTC Report*, Ch. 3, p. 29 – will be pushed out of the market, with immeasurable and irreparable loss to future biotechnological development and innovation. Thus, reasonable restrictions are indispensable because that is the only option that protects the patentee's interest in a fair reward for its product, while respecting the operational needs of purchasers and avoiding practical and transactional costs that could otherwise strangle (both financially and functionally) the biotechnology industry. As this Court has "more than once cautioned," courts "should not read into the patent laws limitations and conditions which the legislature has not expressed." *Diamond* v. *Diehr*, 450 U.S. 175, 182 (1981). There thus is no sound basis for applying the extra-statutory patent exhaustion doctrine so inflexibly that biotechnology companies cannot undertake necessary research or sell the first generation of seeds or vial of cells without "withdraw[ing] [the product] indefinitely from the operation of the franchise secured by the patent." *Mitchell*, 83 U.S. at 551.

2. Legitimate restrictions preserve reasonable uses of the product

Of central concern to petitioners and the Solicitor General are use restrictions that allegedly deprive the purchaser of the only reasonable use of the purchased product. Pet. Br. 33-34, 39; contrast *id.* at 33; Pet. App. 46a; U.S. Cert. Amicus Br. i, 19. This Court's patent exhaustion cases too have stressed the inappropriateness of restrictions that deprive the purchaser of any permissible use of the purchased product.[18]

But the restrictions imposed by the biotechnology industry on the buyer's field of use – that is, limiting the purchaser to non-commercial research rather than commercial exploitation of the patented article – or on the use of second-generation products do not deny the purchaser the opportunity to use the product acquired. The scientist may still conduct her research, and the farmer may still plant and harvest his crop. In so doing, the researcher and farmer enjoy all the ordinary attributes of the patented product that they acquired and are able to put it to the use for which they obtained it.

Channeling uses in that manner simply limits purchasers to using the product that they bought – a first generation seed, a cell line for research – and not a product that they did not buy. Cf. *Andrus* v. *Allard*, 444 U.S. 51, 66 (1979) (noting that property

---

[18] See *Univis*, 316 U.S. at 249 (lens blank "is capable of use only in practicing the patent"); *Adams*, 84 U.S. at 456 (exhaustion where item's "sole value is in its use"); *McQuewan*, 55 U.S. at 553 ("Their only value consists in their use.").

owners possess a "full 'bundle' of property rights," and that loss of one "'strand' of the bundle" does not mean that others have been lost). The restrictions thus do not deprive purchasers of the basic utility of the product, as occurred in *Univis*. They simply protect the patentee against deprivation of its reserved, unsold, and unrewarded rights.

Petitioners themselves acknowledge (Br. 33) – and rightly so – that the patent exhaustion doctrine cannot be extended automatically to products with multiple functional uses. Having notice of the restrictions on its right, the price the purchaser is willing to pay will reflect the limited rights obtained. To permit purchasers to obtain full and unrestricted patent rights after paying for only partial rights would result in an unjustified windfall to the buyer and commensurate loss of the true value of the patent to the patentee.

Moreover, patent law must seek a balance between the need to reward inventors appropriately, as a means to the constitutional end of promoting the progress of science, and the interest of purchasers in exercising the property rights they acquire free from unwarranted control. See *United States* v. *Masonite Corp.*, 316 U.S. 265, 278 (1942). The purpose of the patent exhaustion doctrine has never been to provide bonanzas for purchasers and, in fact, this Court has held that patent exhaustion should not apply unless "it may fairly be said that the patentee has received his reward for the use of the article." *Ibid.* While a patentee is "entitled to but one royalty for a patented machine," he is entitled to obtain that one royalty,

and the patent exhaustion doctrine should not be applied so woodenly as to defeat that right.[19]

3. Contract law offers insufficient protection

Petitioners contend (Pet. Br. 28-29, 41-42, 46) that valid restrictions should be imposed through licenses. But, if by licensing, petitioners mean elaborate and individually negotiated, detailed agreements (as they seem to suggest, see Pet. 42-44), such licensing is not feasible for every $100 vial of cells or bacteria. Small companies – which predominate in the biotechnology area – do not have the resources to implement elaborate licensing arrangements and would have to rely on so-called "shrink-wrap" licenses, where the recipient's acceptance and use of the product gives rise to a limited use license.[20] Petitioners, for their part, are of two minds about whether such licenses should defeat patent exhaustion. Compare *ibid.*, with *id.* at 43 n.13 (noting the "unique exhaustion" issues that

---

[19] See *Union Tool*, 259 U.S. at 113 (no implied license granted for unauthorized sale where patentee did not receive compensation for infringement); cf. *Straus*, 243 U.S. at 500 (invalidating restriction despite its form as a "license notice," because it was "clear" that the patentee had already received his full royalty); *Bauer*, 229 U.S. at 16 (patent exhaustion applied where "[t]here is no showing of a qualified sale for less than value for limited use").

[20] See, *e.g.*, *ProCD, Inc.* v. *Zeidenberg*, 86 F.3d 1447, 1448, 1450-1451 (7th Cir. 1996); *M.A. Mortenson Co.* v. *Timberline Software Corp.*, 998 P.2d 305, 313 (Wash. 2000); *Brower* v. *Gateway 2000, Inc.*, 246 A.D.2d 246, 251 (N.Y. App. Div. 1998).

arise with respect to biotechnology products and computer software).

Reality also belies petitioners' assertion (Br. 49) that the "genius" of a sweeping exhaustion doctrine "is that it greatly reduces transaction costs *without* reducing the patentee's award." With respect to the biotechnology industry, the opposite is true. Biotechnology is critically dependent on a patent law system that protects patentee's rights in subsequent generations of seeds and cycles of biological material, and that can reward the patentee's investment in the lengthy and expensive research and development process. Requiring the elaborate licensing agreements that petitioners favor for every single sale of a cell line, DNA, bacteria, or gene sequence would profoundly increase transaction costs in the industry. And, contrary to petitioners' argument, it would take only one $100 cell line diverted from research use or one farmer commercially exploiting second-generation seed to prove that an "article *can* be unfettered from the claim of his monopoly without paying its tribute." Pet. Br. 49 (quoting *Keeler* v. *Standard Folding Bed Co.*, 157 U.S 659, 666-667 (1895)) (emphasis added).

Furthermore, petitioners are just wrong to argue (Br. 50) that a patentee can have no distinctive need to "parcel its royalty out." In the biotechnology industry, a patented product can have multiple functional uses – such as crop production versus seed manufacturing, or early-identified research uses versus high-value therapeutic or diagnostic uses that emerge only after years of research. Medical and scientific breakthroughs are predicated on a patent law system that ensures the inventor's reward

through lengthy and expensive cooperative research processes.

Finally, contrary to petitioners' view (Br. 46), contract law cannot adequately defend the biotechnology patentee's legitimate interests. As the Constitution itself recognizes, where patentees are enforcing their "exclusive Right to their respective * * * Discoveries," a uniform federal law is needed.[21] Consigning patentees, particularly small biotech companies, to the vagaries of 50 States' contract laws will deny the biotechnology industry the stability and consistency that the federal government itself has acknowledged is critical to the industry's survival and continued growth. *FTC Report* at Ch. 3, p.29.

In addition, contract law cannot adequately protect a patentee's exclusive rights when a third party improperly acquires the second-generation of a self-replicating product. That third party may not be in privity of contract with the patentee or licensee, and thus further (and potentially limitless) reproduction and distribution of the self-replicating product will be difficult to halt. Patent law, by contrast, permits the patentee to enjoin anyone who infringes the patent when irreparable harm is shown (as it would be with self-replication). See 35 U.S.C.

---

[21] See *Florida Prepaid Postsecondary Educ. Expense Bd.* v. *College Sav. Bank*, 527 U.S. 627, 644-645 (1999) ("The need for uniformity in the construction of patent law is undoubtedly important."); *Bonito Boats, Inc.* v. *Thunder Craft Boats, Inc.*, 489 U.S. 141, 162 (1989) ("One of the fundamental purposes behind the Patent and Copyright Clauses of the Constitution was to promote national uniformity in the realm of intellectual property.").

281, 283-285; *eBay Inc.* v. *MercExchange, L.L.C.*, 126 S. Ct. 1837, 1840 (2006).

Even were the third party in privity of contact with the patentee or licensee, the ability to undo the damage wrought by infringing conduct under contract law is extremely limited. The remedies afforded by contract law generally do not include enjoining the unauthorized purchaser or user from distributing a self-replicating product or incorporating or combining it with other products. Unlike many traditional products, once self-replicating gene sequences are combined, they cannot be uncombined. It is virtually impossible "to 'unscramble the egg.'" *Federal Trade Comm'n* v. *University Health, Inc.*, 938 F.2d 1206, 1217 n.23 (11th Cir. 1991). Moreover, as the product continuously replicates and penetrates the market, the value of the product declines, taking with it the scope of damages the patentee can recover.

Nor is it any answer to assert – as petitioners suggest, Pet. Br. 49-50 – that the market price will simply adjust to reflect the additional rights that purchasers acquire and patentees lose. To begin with, the amount of cells or seeds needed for replication purposes is small, and it may take only one unrestricted purchase to unravel completely the patentee's rights, given the products' capacity to replicate indefinitely. As a result, the patentee's entire compensation – the single royalty that the patent exhaustion doctrine promises, see *Univis*, 316 U.S. at 251; *Millinger*, 68 U.S. at 350 – would have to be captured in the first sale of a vial of cells, a sample of recombinant DNA, or a packet of seeds. But that cost would be so exorbitant that few if any

researchers or farmers could afford the product. And with respect to products like cell lines, the patentee rarely has any realistic capacity to predict, at the time the first cells are sold or licensed for research purposes, what the ultimate cost and value of the product will be. Beyond that, the public interest would be better served by a patent system that permits biotechnology research decisions to be made based not upon the highest bid, but upon which entity has the best capacity to investigate and develop a particular product and to promote advances in health and agricultural sciences.

* * * * *

In short, the profound advances that the biotechnology industry has given the American public in the last two decades, not to mention billions of dollars in current and ongoing capital investment decisions, rest critically upon stable and vigorous patent law protections, as the federal government has acknowledged, see *FTC Report*, Ch. 3, p. 1-29; see *id.* at Ch. 1, pp. 1-2. Whatever the proper resolution of the dispute between petitioners and LGE, this Court should not erode (i) the long-established distinction between the right to use and the right to make a patented product; (ii) the legitimacy of licensing restrictions on both venders and purchasers; or (iii) the propriety of restrictions on purchasers that are necessary to the exercise of a patentee's properly reserved rights and that leave the purchaser a reasonable use of the product. The patent exhaustion doctrine was designed to protect against patentees who overreach the proper boundaries of patent law, not to unravel the fundamental protections in patent law that have

proven critical to the development of biotechnology and that have played a singularly important role in spurring the dramatic improvements in medical treatment, health care diagnostics, and agricultural expansion that the last two decades have witnessed.

CONCLUSION

For the foregoing reasons, the Court's decision should preserve the right of patentees to impose restrictions that prevent the unauthorized making of the patented product, that regulate purchases and sales by licensees, or that restrict a buyer's use of a product only as reasonably necessary to enforce the patentee's reserved rights in the patented product's replication or use in alternative fields, while reserving the reasonable and expected use of the product for the purchaser.

Respectfully submitted,

HANS SAUER
THOMAS DILENGE
BIOTECHNOLOGY INDUSTRY ORGANIZATION
1201 Maryland Ave., SW
Suite 900
Washington, DC 20024

PATRICIA A. MILLETT
(COUNSEL OF RECORD)
THOMAS C. GOLDSTEIN
MICHAEL L. KIKLIS
CHRISTOPHER R. PUDELSKI
AKIN, GUMP, STRAUSS, HAUER, & FELD, LLP
1333 New Hampshire Ave., NW
Washington, DC 20036
(202) 887-4000

November 13, 2007

No. 06-937

In The
Supreme Court of the United States

QUANTA COMPUTER, INC., AND QUANTA COMPUTER USA, INC., Q-LITY COMPUTER, INC.,

Petitioners,

v.

LG ELECTRONICS, INC.,

Respondent.

On Writ Of Certiorari To The United States Court Of Appeals For The Federal Circuit

BRIEF *AMICUS CURIAE* OF COMPUTER & COMMUNICATIONS INDUSTRY ASSOCIATION IN SUPPORT OF PETITIONERS

BRIAN KAHIN
MATTHEW SCHRUERS
COMPUTER & COMMUNICATIONS INDUSTRY ASSOCIATION
900 17th Street, NW
Washington, DC 20006
(202) 783-0070

JONATHAN BAND
Counsel of Record
JONATHAN BAND PLLC
21 Dupont Circle, NW
Washington, DC 20036
(202) 296-5675
jband@policybandwidth.com

Counsel for Amicus Curiae

November 13, 2007

COCKLE LAW BRIEF PRINTING CO. (800) 225-6964
OR CALL COLLECT (402) 342-2831

TABLE OF CONTENTS

Page

TABLE OF AUTHORITIES ii

INTEREST OF *AMICUS* 1

SUMMARY OF ARGUMENT 2

ARGUMENT 4

1. The Federal Circuit's invitation to use "conditional sales" to defeat exhaustion threatens the vitality and efficiency of IT product markets 4

2. Imposing new search costs on all purchasers of IT goods represents bad public policy 8

3. The Federal Circuit's limitation of the exhaustion doctrine is uniquely damaging to the IT sector 10

CONCLUSION 14

TABLE OF AUTHORITIES

Page

CASES

American Hoist & Derrick Co. v. Sowa & Sons, Inc., 725 F.2d 1350 (Fed. Cir. 1984).....12

Cybor Corp. v. FAS Techs., Inc., 138 F.3d 1448 (Fed. Cir. 1998).....12

Dastar Corp. v. Twentieth Century Fox Corp., 539 U.S. 23 (2003).....10

eBay, Inc. v. MercExchange LLC, 126 S. Ct. 1837 (2006).....2, 13

Henry v. A.B. Dick Co., 224 U.S. 1 (1912).....2, 14, 15

KSR International Co. v. Teleflex, Inc., 127 S. Ct. 1727 (2007).....2, 11

Mallinckrodt Inc. v. Medipart, Inc., 976 F.2d 700 (Fed. Cir. 1992).....2, 3

Motion Picture Patents Co. v. Universal Film Mfg. Co., 243 U.S. 502 (1917).....2, 15

State Street Bank & Trust Co. v. Signature Fin. Group, Inc., 149 F.3d 1368 (Fed. Cir. 1998).....12

MISCELLANEOUS

AIPLA, Report of the Economic Survey (2007).....9

Asish Arora, *Markets for Technology* (2004).....7

TABLE OF AUTHORITIES – Continued

Page

James Bessen & Michael Meurer, "What's Wrong with the Patent System? Fuzzy Boundaries and the Patent Tax," *First Monday*, vol. 12, no. 6 (June 2007), *available at* http://firstmonday.org/issues/issue12_6/bessen/index.html 13

Zechariah Chafee, Jr., *Equitable Servitudes on Chattels*, 41 Harv. L. Rev. 945 (1928) 5

Henry Chesborough, *Open Innovation* (2003) 7

Bronwyn H. Hall & Rosemarie H. Ziedonis, *The Patent Paradox Revisited: An Empirical Study of Patenting in the U.S. Semiconductor Industry, 1979-95*, 32 Rand J. of Econ. 101 (2001) 11

IPO Survey: Corporate Patent Quality Perceptions in the U.S., Intellectual Property Owners Association, Sept. 20, 2005, *available at* http://www.ipo.org/ 12

Don E. Kash & William Kingston, *Patents in a World of Complex Technologies*, 28 Sci. & Pub. Policy 1 (2001) 11

Mark A. Lemley & Nathan Myhrvold, *How to Make a Patent Market*, Stanford L. & Econ. Olin Working Paper No. 347 (Aug. 2007) *available at* http://ssrn.com/abstract=1012726 ..... 6, 9

BRIEF *AMICUS CURIAE* OF COMPUTER & COMMUNICATIONS INDUSTRY ASSOCIATION IN SUPPORT OF PETITIONERS

Computer & Communications Industry Association ("CCIA") submits this brief as *amicus curiae* and respectfully requests that the Federal Circuit's decision be reversed.

INTEREST OF *AMICUS*[1]

CCIA members participate in many sectors of the computer, information, and communications technology industry and range in size from small entrepreneurial firms to the largest in the business. CCIA members use the patent system regularly, and depend upon it to fulfill the constitutional mandate that it promote innovation. The information technology (IT) produced by CCIA's industry sector has played a central role in promoting innovation and economic growth over the past 20 years, but today imbalances in the patent system adversely affect this industry sector. CCIA has filed *amicus* briefs in other cases

[1] No counsel for a party authored this brief in whole or in part, and no counsel or party made a monetary contribution intended to fund the preparation or submission of this brief. No person other than CCIA, its members, or its counsel made a monetary contribution to its preparation or submission. The parties have consented to the filing of this brief; Petitioners and Respondent have submitted letters of blanket consent to the Clerk of the Court.

before this Court where markets for uniquely complex IT products have been at risk from the Federal Circuit's patent-centric jurisprudence. Recent examples of this include two cases in which this Court unanimously reversed the Federal Circuit: *eBay, Inc. v. MercExchange LLC*, 126 S. Ct. 1837 (2006), and *KSR International Co. v. Teleflex, Inc.*, 127 S. Ct. 1727 (2007). While CCIA does not have a direct financial interest in the outcome of this litigation, allowing the Federal Circuit's decision to stand would threaten the future economic prospects of CCIA's industry sector.

SUMMARY OF ARGUMENT

In *Mallinckrodt Inc. v. Medipart, Inc.*, 976 F.2d 700 (Fed. Cir. 1992), the Federal Circuit upheld a "single use only" restriction accompanying the sale of a medical device as a valid limitation on the use of the device, enforceable as patent infringement as well as under contract law. *Id.* at 707 n.6. By finding a "conditional sale," the Federal Circuit limited the effect of the first sale doctrine, just as this Court did in *A.B. Dick* nearly a century ago, only to overrule that decision five years later when the consequences became evident. *See Motion Picture Patents Co. v. Universal Film Mfg. Co.*, 243 U.S. 502, 518 (1917) (overruling *Henry v. A.B. Dick Co.*, 224 U.S. 1 (1912)).

Under the Federal Circuit's rule, making sales "conditional" circumvents the exhaustion doctrine

and allows patentees to retain the option of asserting the full arsenal of patent rights at any point that component changes hands. In *Quanta*, the Federal Circuit expands on *Mallinckrodt* to offer patentees a prospect that is far more enticing than single use restrictions, and far more disruptive: the opportunity to assess license fees anew throughout the distribution chain. In the short term, the Federal Circuit's rule offers a windfall to appellant LG Electronics ("LGE") and others who are quick to arbitrage the market's failure to follow *Mallinckrodt's* avoidance of this Court's precedents. The loss of confidence in who owns what and for what purposes will create a perverse market for hidden interests whose value lies in their potential to surprise and hold products hostage – and whose negotiation alone will impose tremendous burdens and risks on today's competitive value chains.

In the long term, the rule will create a shadow economy of permissions that advantage opportunists, especially those who own patents outside their core business and so have little need to cooperate in promoting stable and predictable markets in those areas. It will disrupt and skew the entire business ecology of the IT sector to favor upstream patent interests at the expense of assemblers, integrators, vendors, and end users – and likely return the world to a less efficient economy based on vertical integration and stovepiped products and services that do not interoperate.

The impact will be uniquely severe on information and communications technology and the vast array of services that depend on it. Products and services in this sector, especially those based on general purpose computing, are already vulnerable to opportunistic behavior because of their complexity and interdependence. Under the Federal Circuit's rule, practically every transaction within this environment, however routinized it may be now, offers new opportunity for hold-up by multiple patent holders.

ARGUMENT

1. The Federal Circuit's invitation to use "conditional sales" to defeat exhaustion threatens the vitality and efficiency of IT product markets.

The Federal Circuit's rule allows patent holders to engineer "conditional sales" to evade exhaustion for an infinite variety of purposes. It enables them to reach across the stream of commerce and dictate the terms of use, long after products have been manufactured, based on terms in agreements for "conditional sales" that are inaccessible to the current owner of the product.

Like all markets, IT markets function efficiently when they are transparent and transaction costs are low. This depends not only on a common understanding of what the product is but rather on legal standards that can be taken for granted: *i.e.*, a simple,

shared understanding of property rights and the nature of the transaction. Like other goods, standard IT components are transacted as tangible personal property through simple sales. In general, what you see is what you what get: a known item with clear physical boundaries over which the buyer has full and unfettered dominion. Sales are governed by legal rules so well established that they are practically invisible, including long standing common law doctrines disfavoring restraints on alienation and servitudes on chattels. Zechariah Chafee, Jr., *Equitable Servitudes on Chattels*, 41 Harv. L. Rev. 945, 977-987 (1928) (noting arguments against servitudes).

Transaction costs are substantially higher for real property. The high cost and unique nature of real property, along with its relationship to surrounding property, justify the costs of searching for missing information and heightened attention to detail and contingencies. Even so, an elaborate infrastructure has arisen to define boundaries, insure against surprises, and build confidence in the market. Boundaries are surveyed and recorded. Public recording provides compelling evidence of ownership. Abstracts are compiled, and title insurance is widely available at a modest cost.

In sum, transparency and shared information are key attributes of property whether the markets are thin (real estate and patents) or thick (chattels,

including standard IT components).[2] Although the connection between property and markets is generally taken for granted, serious problems arise when court decisions sever that connection.

The Federal Circuit's expansive regime for "conditional sales" does precisely that. It exalts the patentee's interest in extending patent rights at the expense of interests in tangible personal property, and at the further expense of an efficiently functioning product market. It invites clever lawyers to create private regulatory regimes sanctioned by public law to extract new revenues for patent holders at every transaction point in the supply chain.

As Petitioners points out: "There is only one monopoly profit to be obtained in any vertical distribution chain." Pet. Br. 49. In the long run, informed IT buyers may eventually understand how patentees are seeking to take advantage of their expanded patent rights. They can then try to construct new assurances going back up the distribution chain. But in this case the patentee reaps a windfall if the Federal Circuit's rejection of the first sale doctrine is

---

[2] Although on opposite sides of the patent reform debate, Prof. Mark Lemley and Nathan Myrhvold, CEO of Intellectual Ventures, have argued jointly for requiring public registration of all patent licenses, claiming that this is needed to develop a robust and vigorous market for licensing. *See* Mark A. Lemley & Nathan Myhrvold, *How to Make a Patent Market*, Stanford L. & Econ. Olin Working Paper No. 347 (Aug. 2007) *available at* http://ssrn.com/abstract=1012726 (last visited Nov. 8, 2007).

upheld – and so will be encouraged to assert its patents an untold number of times, all the way down to end users. This is not mere speculation; the Petition for Certiorari points out that the patents in question have already been asserted against over 70 other major companies worldwide. Pet. 4.

By supporting the widest possible set of strategic and tactical options for extracting value from patents, the Federal Circuit's rule promises to turn a robust, high-volume market into a lawyers' playground – a top-down shadow economy of permissions that contributes no technology or economic value but is able to exploit whatever dependencies, lock-in, and inertia exists in the present distribution chain. This is not a prescription for innovation, unless the capacity to hijack downstream investments is truly needed as an inducement to invention.

As the Federal Circuit's rule moves market power upstream and undermines confidence downstream, an elaborate web of indemnifications may coalesce around the companies with the largest portfolios, most extensive cross-licenses, and deepest pockets. But assembly and integration may also move back in-house to avoid these expanding costs and risks, undermining the growing markets for technology based on "open innovation" in supply chains.[3] This,

---

[3] *See generally* Asish Arora, *Markets for Technology* (2004); Henry Chesborough, *Open Innovation* (2003) (describing recent supply chain innovation).

together with the patent holder's newfound ability to control downstream commerce through "conditional sales," threatens a return to the era of vertical integration, before business focus, specialization, supply chain management, and international trade brought the high quality at low prices that we enjoy today.

2. Imposing new search costs on all purchasers of IT goods represents bad public policy.

The exhaustion doctrine, as this Court has interpreted it, provides a clear, bright line segregating the familiar laws of personal property and sales from the unique power of federal patent laws. Preserving this clarity is essential inasmuch as patents and personal property are governed by fundamentally different regimes with vastly different theoretical and practical implications. These stark differences provide a strong policy argument for exhaustion and against constraints or conditions on the free tradability and use of personal property.

Patent infringement is a strict liability tort. The public is responsible for divining the amorphous and complex boundaries of all patent rights, known and unknown. In theory, the public disclosure function of the patent system gives the public notice of patents in force. The costs of searching for patents vary from field depending on the quality and volume of patents and the nature of the non-patent literature, but are indisputably high for complex products. As a Cisco witness explained at a 2002 Federal Trade Commission

hearing: "[T]here are too many patents to be able to even locate which ones are problematic. I used to say only IBM does clearance searches . . . but IBM tells me even they don't do clearance searches anymore."[4]

The cost now imposed by the Federal Circuit is not merely the cost of a clearance search – which alone is substantial[5] – but the cost of searching the upstream portion of the distribution chain of an IT good for hidden servitudes, for which no government registry of any sort exists. The scope of a patent is, at least in theory, disclosed to the public, but licenses are not. *See* Lemley & Myrhvold, *supra* note 2. So even though product clearance searches, aided by a federal patent registry, cannot be conducted with confidence by even the largest in the industry, the Federal Circuit's decision now proposes to saddle the entire marketplace with a new dimension of search costs, for all components, unaided by any system of organization whatsoever. This Court recently ruled against requiring a similarly impossible search for intellectual property rights holders, stating that the

---

[4] *See Competition, Economic, and Business Perspectives on Substantive Patent Law Issues: Non-Obviousness and Other Patentability Criteria: Hearing Before the Federal Trade Commission* 81 (Oct. 30, 2002) (statement of Robert Barr, Worldwide Patent Counsel, Cisco Systems) *available at* http://www.ftc.gov/opp/intellect/021030trans.pdf (last visited Nov. 8, 2007).

[5] The average cost of a validity opinion is $15,241. An infringement opinion averages $13,786. AIPLA, Report of the Economic Survey, I-77 (2007). These costs are per patent, not per product.

statute did not require such a "search for the source of the Nile and all its tributaries." *Dastar Corp. v. Twentieth Century Fox Corp.*, 539 U.S. 23, 36 (2003) (construing Lanham Act).

The combination of strict liability and high search costs reveals the practical necessity for a bright-line first sale doctrine. The doctrine focuses the costs at one critical point in the chain of the manufacture and sale of products. This is the point where patents are in effect embedded (whether by license or by the patentee) in tangible personal property and released into commerce with the imprimatur of the manufacturer as assurance for the downstream market. Here patents, capital investment, and credibility converge, and the two sides are likely to be both informed and well matched so that search and transaction costs can be minimized.

3. The Federal Circuit's limitation of the exhaustion doctrine is uniquely damaging to the IT sector.

The Federal Circuit's exaltation of the power of patents over product markets represents a fundamental blindness toward the economic context for information technology. Marketed IT products have thousands of potentially patentable functions, whereas pharmaceuticals may be effectively protected by a single patent. Since people want products rather than patents, the value of individual IT patents is diluted by "the fact that complex technologies are

synthetic systems that are more than the sum of their parts." Don E. Kash & William Kingston, *Patents in a World of Complex Technologies*, 28 Sci. & Pub. Policy 1, 12 (2001). Because of the complex, interdependent nature of IT products, large companies have found extensive cross-licensing essential to maintaining freedom to operate and the freedom of action needed to develop new products. Since cross-licensing means opting out of exclusivity, this also works to lower the value of individual patents, but not enough to diminish demand for more patents and larger portfolios. *See* Bronwyn H. Hall & Rosemarie H. Ziedonis, *The Patent Paradox Revisited: An Empirical Study of Patenting in the U.S. Semiconductor Industry, 1979-95*, 32 Rand J. of Econ. 101 (2001).

Yet a number of the Federal Circuit's decisions pull against these marketplace realities. The court's rule on automatic injunctive relief, which this Court struck down in *eBay v. MercExchange*, 126 S. Ct. at 1841, held complex products hostage to patents for functions that represented only a tiny fraction of the product's value. The Federal Circuit's low standard of nonobviousness, rejected by this Court in *KSR International v. Teleflex*, 127 S. Ct. at 1742-43, inflated the number of patents, especially patents for trivial combinations likely to be "invented" independently many times over. Despite well-known deficiencies in the PTO's examination process and widespread

concerns about patent quality,[6] the Federal Circuit has endowed issued patents with an unjustifiably enhanced presumption of validity that can only be overcome with "clear and convincing evidence." *American Hoist & Derrick Co. v. Sowa & Sons, Inc.*, 725 F.2d 1350, 1368 (Fed. Cir.), *cert. denied*, 469 U.S. 821 (1984). The Federal Circuit's *State Street* decision, not yet visited by this Court, threw open the floodgates for patents at higher levels of abstraction, including non-technological innovations formerly rejected under the business method exclusion. *State Street Bank & Trust Co. v. Signature Fin. Group, Inc.*, 149 F.3d 1368 (Fed. Cir. 1998).

By making patents plentiful, powerful, and easy to assert, the Federal Circuit has abetted portfolio racing and helped bring about the patent thickets that shroud the patent landscape, undermine the public disclosure principle, and frustrate the notice function. The notice function in particular has been limited by the Federal Circuit's de novo review of claims interpretation. *Cybor Corp. v. FAS Techs., Inc.*, 138 F.3d 1448, 1456 (Fed. Cir. 1998) (en banc). Economists have found a relationship between notice failure and abstract subject matter evidenced by increased litigation rates for software patents, and greatly increased rates for business method patents.

---

[6] *See IPO Survey: Corporate Patent Quality Perceptions in the U.S.*, Intellectual Property Owners Association, Sept. 20, 2005, *available at* http://www.ipo.org/ (last visited Nov. 8, 2007).

See James Bessen & Michael Meurer, "What's Wrong with the Patent System? Fuzzy Boundaries and the Patent Tax," *First Monday*, vol. 12, no. 6 (June 2007) *available at* http://firstmonday.org/issues/issue12_6/bessen/index.html.

This clouded environment has created opportunities and ample awards for surprise and hold-up. As Justice Kennedy observed in his concurrence in *eBay*: "An industry has developed in which firms use patents not as a basis for producing and selling goods but, instead, primarily for obtaining licensing fees." He noted that a patent that was a small component of a product could be exploited for undue leverage in negotiations by virtue of the threat of an injunction. *Id.* at 1842.

The concern of commentators to date has been with threats posed by non-producing entities outside the product supply chain (often described as "trolls"), but the Federal Circuit's abrogation of the exhaustion doctrine offers the same opportunities for surprise and hold-up from *within* established value chains. This is a zone where ongoing business relationships are valued, and where major companies are commonly cross-licensed with each other. Yet the Federal Circuit's reinvention of "conditional sales" allows LG Electronics, one of the three largest Korean chaebols, to leapfrog its cross-licensed relationship with Intel to pursue smaller companies who buy and assemble components for others. These companies lack the

substantial patent portfolios needed to secure portfolio cross-license from LG Electronics.[7] Stripped of the exhaustion doctrine's protection by the Federal Circuit, their role in the supply chain is in jeopardy. Indeed, the entire IT supply chain, broad and deep as it is, is at risk from LGE's demands. Even end users are at risk if they are large enough to make an attractive target – or if they are too small to resist LGE's demands. Nor is the opportunity for asserting cross-licensed portfolios against downstream entities limited to LGE. Any and all of the patent holders that are presently neutralized by cross-licensing have effectively been given a hunting license in the open season declared by the Federal Circuit.

CONCLUSION

The challenge presented by the Federal Circuit's rule is strikingly similar to that faced by this Court nearly 100 years ago. Chief Justice White, dissenting in *Henry v. A.B. Dick*, argued that the effect of that ruling "unwarrantedly extend[ed] the Federal judicial power", resulting in a principle "as broad as society itself, affecting a multitude of people, and capable of

[7] The trial court in *Quanta* assumed that a non-assertion agreement between Microsoft and LGE protected the defendant companies by virtue of the fact that they were Microsoft licensees, licensed to install Microsoft products. The Federal Circuit reversed, finding that an issue of fact precluded summary judgment.

operation upon every conceivable subject of human contract, interest, or activity". 224 U.S. at 49-50.

When the Court in *Motion Picture Patents Co.* overruled *A.B. Dick* a mere five years later, it observed the consequences predicted by the dissent: "The high standing of the court rendering this decision and the obvious possibilities for gain in the method which it approved led to an immediate and widespread adoption of the system, in which these restrictions expanded into more and more comprehensive forms". 243 U.S. at 515. This mischief led Justice Clarke to conclude that "[a] restriction which would give to the plaintiff such a potential power for evil over an industry which must be recognized as an important element in the amusement life of the nation, under the conclusions we have stated in this opinion, is plainly void". *Id.* at 519.

Today, the Court does not have to overrule its own precedent; it need merely confirm it. Chief Justice White's concerns are as compelling now as they were prescient in 1912. But the stakes are greater, extending beyond the facts in issue, beyond any particular industry, such as the "amusement life of the nation", reaching to the very heart of the sector that has most conspicuously enabled innovation and economic growth over the past two decades. Like the short-lived rule in *A.B. Dick*, the Federal Circuit's rule has vast practical implications, now made infinitely broader and deeper by a pervasive, interconnected digital economy. Like *A.B. Dick*, the Federal

Circuit's decision below effectively subordinates state law to federal law and exalts patent law over the general law of personal property, sales, and chattels – thereby surreptitiously, but radically, expanding the Federal Circuit's own jurisdiction over commerce.

For the foregoing reasons, CCIA respectfully urges this Court to reverse the Federal Circuit's decision.

Respectfully submitted,

BRIAN KAHIN
MATTHEW SCHRUERS
COMPUTER & COMMUNICATIONS INDUSTRY ASSOCIATION
900 17th Street, NW
Washington, DC 20006
(202) 783-0070

JONATHAN BAND
Counsel of Record
JONATHAN BAND PLLC
21 Dupont Circle, NW
Washington, DC 20036
(202) 296-5675
jband@policybandwidth.com

Counsel for Amicus Curiae

November 13, 2007

73 54386a

(11)

28 pgs

No. 06-937

FILED
NOV 1 2 2007
OFFICE OF THE CLERK
SUPREME COURT, U.S.

IN THE

Supreme Court of the United States

QUANTA COMPUTER, INC., *et al.*,

Petitioners,

v.

LG ELECTRONICS, INC.,

Respondent.

ON WRIT OF CERTIORARI TO THE
UNITED STATES COURT OF APPEALS
FOR THE FEDERAL CIRCUIT

BRIEF AMICI CURIAE OF CONSUMERS UNION (CU), ELECTRONIC FRONTIER FOUNDATION (EFF), AND PUBLIC KNOWLEDGE IN SUPPORT OF THE PETITIONER

MARC N. BERNSTEIN
THE BERNSTEIN LAW GROUP, P.C.
555 Montgomery Street
Suite 1650
San Francisco, CA 94111
(415) 765-6634

FRED VON LOHMANN
Counsel of Record
JASON SCHULTZ
ELECTRONIC FRONTIER FOUNDATION
454 Shotwell St.
San Francisco, CA 94110
(415) 436-9333

Counsel for Amici Curiae

212299

COUNSEL PRESS
(800) 274-3321 • (800) 359-6859

TABLE OF CONTENTS

Page

TABLE OF CITED AUTHORITIES ii

STATEMENT OF INTEREST 1

SUMMARY OF ARGUMENT 1

ARGUMENT 4

I. The Federal Circuit's Interpretation of Patent Exhaustion is Inconsistent with this Court's Precedents. 4

II. Empowering Patent Owners to Impose Post-Sale Use Restrictions on Patented Goods Will Harm Consumers. 6

III. Contract Law is the Proper Tool for Protecting the Patentee's Legitimate Interests in Restricting Post-Sale Uses. 18

CONCLUSION 21

TABLE OF CITED AUTHORITIES

Page

Cases

Adams v. Burke, 84 U.S. (17 Wall.) 453 (1873) .. 2, 5

Ariz. Cartridge Remfrs. Ass'n v. Lexmark Int'l, Inc., 421 F.3d 981 (9th Cir. 2005) 2, 10

Aro Mfg. Co. v. Convertible Top Replacement Co., 365 U.S. 336 (1961) 9

Bobbs-Merrill Co. v. Straus, 210 U.S. 339 (1908) 5

Henry v. A.B. Dick Co., 224 U.S. 1 (1912) 2

Hewlett-Packard Co. v. Repeat-O-Type Stencil Mfg. Corp., 123 F.3d 1445 (Fed. Cir. 1997) 3

Hill v. Gateway 2000, Inc., 105 F.3d 1147 (7th Cir. 1997) 8

Illinois Tool Works, Inc. v. Independent Ink, Inc., 547 U.S. 28 (2006) 13

Image Tech. Services, Inc. v. Eastman Kodak Co., 125 F.3d 1195 (9th Cir. 1997) 11

Jazz Photo Corp. v. Int'l Trade Comm., 264 F.3d 1094 (Fed. Cir. 2001) 3

Cited Authorities

	Page
Keeler v. Standard Folding Bed Co., 157 U.S. 659 (1895)	6
Lear, Inc. v. Adkins, 395 U.S. 653 (1969)	20
Mallinckrodt, Inc. v. Medipart, Inc., 976 F.2d 700 (Fed. Cir. 1992)	*passim*
Motion Picture Patents Co. v. Universal Film Mfg. Co., 243 U.S. 502 (1917)	2, 17
Payne v. Tennessee, 501 U.S. 808 (1991)	6
Quality King Distribs., Inc. v. L'Anza Research Int'l, Inc., 523 U.S. 135 (1998)	5, 16, 17
Storage Tech. Corp. v. Custom Hardware & Engineering Consulting Inc., 421 F.3d 1307 (Fed. Cir. 2005)	10
United States v. Univis Lens Co., 316 U.S. 241 (1942)	5
Volkswagenwerk Aktiengesellschaft v. Church, 411 F.2d 350 (9th Cir. 1969)	11

Cited Authorities

Page

Statutes

17 U.S.C. § 117(c) 10

Books and Articles

Zachariah Chafee, *The Music Goes Round and Round: Equitable Servitudes and Chattels*, 69 Harv. L. Rev. 1250 (1956) 9

Julie E. Cohen & Mark A. Lemley, *Patent Scope and Innovation in the Software Industry*, 89 Cal. L. Rev. 1 (2001) 13

William W. Fisher III, *When Should We Permit Differential Pricing of Information?*, 55 U.C.L.A. L. Rev. 1 (2007) 14, 16

Wendy J. Gordon, *Intellectual Property as Price Discrimination: Implications for Contract*, 73 Chi.-Kent L. Rev. 1367 (1998) 15, 16

Louis Kaplow, *The Patent-Antitrust Intersection: A Reappraisal*, 97 Harv. L. Rev. 1813 (1984) 16

James B. Kobak, Jr., *Contracting Around Exhaustion: Some Thoughts About the CAFC's Mallinckrodt Decision*, 75 J. Pat. & Trademark Office Soc'y 550 (1993) 5

Cited Authorities

Page

Mark A. Lemley, *Beyond Preemption: The Law and Policy of Intellectual Property Licensing*, 87 Cal. L. Rev. 111 (1999) 20

Thomas W. Merrill & Henry E. Smith, *Optimal Standardization in the Law of Property: The Numerus Clausus Principle*, 110 Yale L.J. 1 (2000) 6, 8

Mike Musgrove, *Online CD Seller Fights Suit*, WASH. POST, Sept. 22, 2007, at D2 12

Roger Parloff, *Microsoft Takes on the Free World*, Fortune, May 28, 2007 8

Mark R. Patterson, *Contractual Expansion of the Scope of Patent Infringement Through Field-of-Use Licensing*, 49 Wm. & Mary L. Rev. 157 (2007) 5, 14, 19, 20

Glen O. Robinson, *Personal Property Servitudes*, 71 U. Chi. L. Rev. 1449 (2004) 5

Richard H. Stern, *Post-Sale Patent Restrictions after Mallinckrodt—An Idea in Search of Definition*, 5 Alb. L.J. Sci. & Tech. 1 (1994) 14, 17, 18

Cited Authorities

Page

Richard H. Stern, *The Unobserved Demise of the Exhaustion Doctrine in U.S. Patent Law: Mallinckrodt v. Medipart*, 15 Eur. Intell. Prop. Rev. 460 (1993) 5

Molly Shaffer Van Houweling, *The New Servitudes*, 96 G'town L. J. (forthcoming 2008) 7, 8, 9

Eric von Hippel, *Democratizing Innovation* (2005) 12

Peter Wayner, *Don't Throw Out Your Broken iPod; Fix It via the Web*, N.Y. Times, Nov. 8, 2007, at C11 10

STATEMENT OF INTEREST[1]

Consumers Union (CU) is an expert, independent, nonprofit organization, whose mission is to work for a fair, just, and safe marketplace for all consumers. CU publishes Consumer Reports and ConsumerReports.org in addition to two newsletters, Consumer Reports on Health and Consumer Reports Money Adviser, with combined subscriptions of more than 7 million.

The Electronic Frontier Foundation (EFF) is a nonprofit, membership-supported public interest organization working to protect consumer interests, civil liberties, innovation, and free expression in the digital world.

Public Knowledge is a Washington, D.C.-based public interest group working to defend citizens' rights in the emerging digital culture.

Amici share a common interest in assisting the courts to strike the appropriate balance between the rights of intellectual property owners and the public.

SUMMARY OF ARGUMENT

For more than a century, the patent exhaustion doctrine has marked the border between the intellectual

---

[1] No counsel for a party authored this brief in whole or in part, and no counsel or party made a monetary contribution intended to fund the preparation or submission of this brief. No person other than *amici curiae*, their members, or their counsel made a monetary contribution to its preparation or submission. The parties have consented to the filing of this brief.

property rights of patentees and the personal property rights of consumers. In the words of this Court, "in the essential nature of things, when the patentee, or the person having his rights, sells a machine or instrument whose sole value is in its use, he receives the consideration for its use and he parts with the right to restrict that use." *Adams v. Burke*, 84 U.S. (17 Wall.) 453, 456 (1873). Consequently, according to a century-old line of Supreme Court and lower court precedents, when a consumer purchases a patented product, that consumer owns it outright, and the patent owner may not thereafter invoke patent law to restrict its post-sale use, repair, or resale.

In 1992, however, the Federal Circuit in *Mallinckrodt, Inc. v. Medipart, Inc.*, 976 F.2d 700 (Fed. Cir. 1992), abruptly broke with this Court's patent exhaustion precedents, reimagining the doctrine as merely a unilaterally disclaimable "implied license."[2] Thanks to *Mallinckrodt* and its Federal Circuit progeny, and despite contrary rulings by this Court, consumers now find themselves confronted by a growing array of "label licenses" that purport to impose post-sale restrictions on the patented goods they buy. *See, e.g.*, *Ariz. Cartridge Remfrs. Ass'n v. Lexmark Int'l, Inc.*, 421 F.3d 981, 983-84 (9th Cir. 2005) ("single use only"

---

[2] This Court briefly endorsed the "implied license" view of patent exhaustion in *Henry v. A.B. Dick Co.*, 224 U.S. 1 (1912), only to regret it and return to the traditional rule a few years later in *Motion Picture Patents Co. v. Universal Film Mfg. Co.*, 243 U.S. 502 (1917). In overruling *A.B. Dick*, the Court noted that the "implied license" view of exhaustion had resulted in the "immediate and widespread adoption" of use restrictions on patented products. *See id.* at 515.

restriction on laser printer toner cartridges); *Jazz Photo Corp. v. Int'l Trade Comm.*, 264 F.3d 1094, 1107-08 (Fed. Cir. 2001) ("single use only" language contained in camera instructions); *Hewlett-Packard Co. v. Repeat-O-Type Stencil Mfg. Corp.*, 123 F.3d 1445, 1453 (Fed. Cir. 1997) ("single use only" language contained in insert for inkjet printer cartridges).

By empowering patent owners to conjure what amount to servitudes that run with patented goods, the Federal Circuit has impermissibly and unwisely expanded patent scope by judicial fiat. As patentees increasingly exploit their ability to impose such unfair restrictions and enforce them in infringement actions, consumers will increasingly suffer the following distinct harms:

- Increased information costs when trying to ascertain restrictions on patented goods;
- Erosion of the well-established right to repair patented goods;
- Interference with the functioning of vibrant secondary markets (such as eBay and Craigslist) enabled by new technologies;
- Diminished opportunities for "user innovation"; and
- Expanded use of inefficient and unfair price discrimination in connection with patented goods.

There are no countervailing policy advantages that justify the imposition of these harms on consumers and the economy at large.

At the same time, a return to the principles enunciated in this Court's patent exhaustion precedents will not undermine the incentives that patent law affords patent owners. Patent owners, like property owners generally, will remain free to rely on contract law if they would like to restrict post-sale uses of their products. From the perspective of consumers, however, contract law is better equipped to address the concerns that commonly arise when a patentee attempts to impose post-sale use restrictions on patented goods.

In the instant case, the Federal Circuit relied on its misguided *Mallinckrodt* line of cases in reversing the district court and holding in favor of Respondent LG Electronics, Inc. (LGE). This Court should take the opportunity to reverse the Federal Circuit's ruling and overrule its *Mallinckrodt* line of cases, thereby restoring the traditional patent exhaustion doctrine.

ARGUMENT

I. The Federal Circuit's Interpretation of Patent Exhaustion is Inconsistent with this Court's Precedents.

As ably explained in Petitioners' opening brief, the Federal Circuit's reimagining of patent exhaustion as merely an "implied license" simply cannot be squared with this Court's precedents. Pet. 15-28. On this point, the leading commentators are in unanimous agreement.

See Mark R. Patterson, *Contractual Expansion of the Scope of Patent Infringement Through Field-of-Use Licensing*, 49 Wm. & Mary L. Rev. 157, 168-71 (2007); James B. Kobak, Jr., *Contracting Around Exhaustion: Some Thoughts About the CAFC's Mallinckrodt Decision*, 75 J. Pat. & Trademark Office Soc'y 550, 554-59 (1993); Richard H. Stern, *The Unobserved Demise of the Exhaustion Doctrine in U.S. Patent Law: Mallinckrodt v. Medipart*, 15 Eur. Intell. Prop. Rev. 460, 461 (1993).[3]

This alone provides a sufficient basis to reject the Federal Circuit's misguided *Mallinckrodt* approach. To hold otherwise would be to disrupt settled legal and marketplace expectations reaching back to *Adams v. Burke*. Over the course of more than 100 years, both Congress and private parties have acted in reliance on the principle that "sale of [a patented good] exhausts the monopoly in that article and the patentee may not thereafter, by virtue of his patent, control the use or disposition of the article." *United States v. Univis Lens Co.*, 316 U.S. 241, 250 (1942).[4] In light of this long settled

[3] Even commentators who are skeptical of the substantive merits of this Court's exhaustion precedents agree that the Federal Circuit's gloss on them constitutes a "creative misreading of the prior texts." *See* Glen O. Robinson, *Personal Property Servitudes*, 71 U. Chi. L. Rev. 1449, 1469 (2004).

[4] The Court has come to the same conclusion in the copyright context, *see Quality King Distribs., Inc. v. L'Anza Research Int'l, Inc.*, 523 U.S. 135, 152 (1998) ("The whole point of the first sale doctrine is that once the copyright owner places a copyrighted item in the stream of commerce by selling it, he has exhausted his exclusive statutory right to control its distribution."); *Bobbs-Merrill Co. v. Straus*, 210 U.S. 339, 350-51 (1908) (rejecting publisher's infringement claim premised on minimum resale price restriction printed in a book).

practice, LGE bears a heavy burden in asking this Court to endorse the Federal Circuit's contrary approach, which expressly allows patent owners to impose post-sale restrictions on patented goods. *See Payne v. Tennessee*, 501 U.S. 808, 827-28 (1991) ("Considerations in favor of *stare decisis* are at their acme in cases involving property and contract rights, where reliance interests are involved. . . .").

II. Empowering Patent Owners to Impose Post-Sale Use Restrictions on Patented Goods Will Harm Consumers.

An endorsement of the *Mallinckrodt* line of cases would not only upset settled expectations stretching back more than a century, but would also threaten the legitimate interests of American consumers in at least five distinct ways.

First, the Federal Circuit's rule increases information costs for consumers by creating uncertainty regarding their freedom to use, repair, and resell the patented goods they own. In the tangible property context, the desire to minimize unnecessary information processing costs has long been a motive force behind the common law's aversion to servitudes that run with chattel. *See* Thomas W. Merrill & Henry E. Smith, *Optimal Standardization in the Law of Property: The Numerus Clausus Principle*, 110 Yale L.J. 1, 26-34 (2000) (describing market externalities that arise from creation of idiosyncratic servitudes on chattel). The same concern has been echoed in this Court's patent exhaustion precedents. *See Keeler v. Standard Folding Bed Co.*, 157 U.S. 659, 667 (1895) ("[T]he inconvenience and annoyance

to the public that an opposite [rule] would occasion are too obvious to mention."). In other words, the patent exhaustion doctrine allows consumers to trust that the ordinary use, repair, and resale of the tangible goods they purchase will not give rise to an infringement suit at the hands of the patentee who sold it to them. *See* Molly Shaffer Van Houweling, *The New Servitudes*, 96 G'town L. J. (forthcoming 2008)[5] (observing that this Court's exhaustion precedents are "part of an effort to maintain the informational simplicity of commerce in things that 'pass from hand to hand,' even where those things are burdened with intellectual property rights.").

The contrary outcome seems preposterous—how can a patentee sue consumers for using products purchased from authorized vendors? Yet this is precisely the counterintuitive result that LGE seeks here. Going "single use" restrictions one better, LGE here relies on what amounts to a "zero use" notice to trump the patent exhaustion principle. Purchases from LGE's authorized seller, Intel, were accompanied by a "notice" that purported to withhold any LGE patent rights in the goods purchased. Although Petitioners here are wholesale manufacturers, LGE could just as easily require the delivery of similar "notices" to consumers, reserving the right to demand further royalties or otherwise restrict the use, repair, or resale of computers that incorporate its patented inventions.

LGE's effort here is just one example of the mischief that *Mallinckrodt* unleashes by ushering in an era of chattel servitudes backed by patent law. This will

---

[5] Available from http://ssrn.com/abstract=1028947.

increase information costs for consumers and impede the smooth functioning of markets. Consider the personal computers at issue in this case. Under the Federal Circuit's "implied license" view of exhaustion, a consumer would have to scour the product, packaging, and accompanying literature to determine whether the product is subject to any patents and, if so, whether any binding post-sale restrictions might apply to its use.[6] *See* Merrill & Smith, *supra*, at 27-34 (discussing difficulties facing consumers in a world where wrist watches could be burdened with unusual servitudes). Even if the consumer were able to ascertain the existence and nature of these post-sale restrictions, she is unlikely to know at the time of purchase whether these restrictions will impede as-yet-unanticipated future uses of the product. *See* Van Houweling, *supra* ("Thus the purchaser of an inexpensive laser printer may not fully contemplate how burdensome it will be to respect a requirement that the printer only be used with non-recycled ink cartridges, nor how undesirable that restriction may make the printer if recycling technology improves, nor how environmentally harmful it will be to use new instead of recycled cartridges.").

---

[6] Patent law already imposes considerable information costs on consumers, insofar as products may infringe the patents of unknown third parties. *See, e.g.*, Roger Parloff, *Microsoft Takes on the Free World*, Fortune, May 28, 2007 (Microsoft alleges that competing Linux software violates more than 200 patents). In addition, consumers increasingly face information costs arising from the spread of "shrinkwrap" licenses. *See Hill v. Gateway 2000, Inc.*, 105 F.3d 1147 (7th Cir. 1997) (addressing form contracts included with a personal computer). Undermining the patent exhaustion doctrine would further exacerbate these costs for consumers.

These information costs are compounded as the computer passes from hand to hand in secondary markets. When the initial purchaser donates the computer to charity or sells it on eBay, how will the new owner divine the nature of the restrictions that may encumber it, especially if the product has long since been separated from its original packaging and accompanying materials? Imposing information costs of this kind on relatively inexpensive tangible goods is likely to lead to inefficiency and surprise, interfering with the "policy in favor of mobility" long embraced by personal property law.[7] Zachariah Chafee, *The Music Goes Round and Round: Equitable Servitudes and Chattels*, 69 Harv. L. Rev. 1250, 1261 (1956).

Second, the Federal Circuit's *Mallinckrodt* rule threatens to undermine the consumer's well-established right to repair a patented product without fear of patent infringement liability. This Court's precedents have long distinguished repair from reconstruction, making it clear that repair activities short of reconstruction fall outside the scope of the patent. *See Aro Mfg. Co. v. Convertible Top Replacement Co.*, 365 U.S. 336, 342-43 (1961).

The Federal Circuit's rule jeopardizes not only a consumer's ability to repair his own goods, but also

---

[7] Servitudes are tolerated on real property in part because land is less mobile and typically much more expensive, making the relative information costs much lower. *See* Van Houweling, *supra* ("[N]on-possessory use restrictions make property transactions more troubling for chattels than for land because most transactions in chattels could otherwise be frequent, simple, and fast, on account of the inherent mobility and relative cheapness of chattels.").

threatens independent product refurbishers and repair services, insofar as "label license" prohibitions on re-use or repair could be brought home against such services by patent infringement actions.[8] In fact, patent owners have already moved to exploit the *Mallinckrodt* rule in an effort to eliminate secondary markets in refurbished goods. *See Ariz. Cartridge Remfr. Ass'n v. Lexmark*, 421 F.3d at 986-87 (invoking *Mallinckrodt*, patent owner asserts "single use only" license on laser printer toner cartridges to impede sales of independently refilled cartridges).

As anyone who has ever sought automotive repair services is well aware, consumers are better off with a wide array of competing providers of post-sale service and repair. *Cf.* Peter Wayner, *Don't Throw Out Your Broken iPod; Fix It via the Web*, N.Y. TIMES, Nov. 8, 2007, at C11 (describing increasing number of repair resources available to consumers on the Internet). And while efforts by manufacturers to monopolize markets for repair and maintenance services are nothing new, both Congress and the courts have exercised great care to protect independent providers of these services from manufacturers' anticompetitive invocations of their intellectual property entitlements.[9] The Federal Circuit's

---

[8] *See generally* Amicus Curiae Brief of Automotive Engine Rebuilders Ass'n, Automotive Parts Remfrs. Ass'n, and Int'l Imaging Tech. Council in Support of the Petitioners.

[9] *See, e.g.*, 17 U.S.C. § 117(c) (copyright exception intended to protect computer maintenance services); *Storage Tech. Corp. v. Custom Hardware & Engineering Consulting Inc.*, 421 F.3d 1307, *reh'g denied*, 431 F.3d 1374 (Fed. Cir. 2005) (rejecting (Cont'd)

Mallinckrodt approach would represent an unjustified departure from this sensible policy, to the ultimate detriment of consumers.

Third, the Federal Circuit's cramped view of patent exhaustion imperils the vibrant new secondary markets made possible by new Internet technologies. Thanks to companies like eBay and Craigslist, consumers now have access to highly efficient secondary markets for an unprecedented variety of goods. This enables a consumer not only to find second-hand and discounted goods more easily, but has also added considerable real-world value to the consumer's right to resell the products he owns. As the millions who have used eBay to sell an obsolete computer, unneeded television, or overlooked exercise machine can attest, secondary markets provide consumers with valuable opportunities to clean out the attic, salve buyers' remorse, and make a few dollars into the bargain. This, in turn, contributes to an efficient marketplace, moving goods into the hands of those who value them most highly.

"Single use only" and "not for resale" labels and notices pose a threat to these vibrant new secondary markets. Thanks to the *Mallinckrodt* line of cases, patent owners can now invoke these post-sale restrictions and

---

(Cont'd)
manufacturer's effort to use copyright to block independent computer maintenance services); *Image Tech. Services, Inc. v. Eastman Kodak Co.*, 125 F.3d 1195, 1219-20 (9th Cir. 1997) (rejecting as pretextual patent justifications for refusing to supply parts to independent service bureaus); *Volkswagenwerk Aktiengesellschaft v. Church*, 411 F.2d 350, 352 (9th Cir. 1969) (rejecting trademark claim against independent VW repair shop).

threaten intermediaries like eBay with secondary patent infringement liability, effectively disrupting these markets.[10]

Fourth, post-sale use restrictions imposed under the patent laws may interfere with the kinds of "user innovation" that scholars have recognized as an important contributor to advances in many fields. As explained by Professor Eric von Hippel:

> The user-centered innovation process . . . is in sharp contrast to the traditional model, in which products and services are developed by manufacturers in a closed way, the manufacturers using patents, copyrights, and other protections to prevent imitators from free riding on their innovation investments. . . . [A] growing body of empirical work shows that users are the first to develop many and perhaps most new industrial and consumer products. Further, the contribution of users is growing steadily larger as a result of continuing advances in computer and communications capabilities."

Eric von Hippel, *Democratizing Innovation* 2 (2005). This "user innovation" is far from an isolated activity: "Empirical studies show that many users—from 10

---

[10] This risk is not merely hypothetical—in the copyright context, for example, major record labels have been using "not for resale" labels to trump the first sale rights of eBay sellers, sparking litigation. *See* Mike Musgrove, *Online CD Seller Fights Suit*, WASH. POST, Sept. 22, 2007, at D2.

percent to nearly 40 percent—engage in developing or modifying products." *Id.* at 4.

The patent exhaustion doctrine provides breathing room for this kind of innovation (so long as a user's activities do not cross over into the exclusive rights of the patent owner). So, for example, when early wind-surfing enthusiasts decided to add foot-straps to existing sail-boards, they had nothing to fear from any patents that might have applied to the pre-existing boards they had purchased. *Id.* at 1. Similarly, when bicycling enthusiasts in the 1970s began combining existing bicycle parts into what would eventually be commercialized as "mountain bikes," they were free to build and sell experimental combinations to their fellow enthusiasts. *Id.* at 72-73.

In the wake of the Federal Circuit's *Mallinckrodt* ruling, in contrast, this breathing room for user innovation could easily be curtailed as patent owners festoon their products with labels announcing "modifications prohibited," "for personal use, not for resale," or "for combination only with other authorized components."[11] *See* Julie E. Cohen & Mark A. Lemley, *Patent Scope and Innovation in the Software Industry*, 89 Cal. L. Rev. 1, 33-34 (2001) (discussing effect of the

[11] This Court recently held that patentees may tie the sale of patented products to the purchase of nonpatented products, at least absent a showing of market power in the tying product. *See Illinois Tool Works, Inc. v. Independent Ink, Inc.*, 547 U.S. 28 (2006). The Federal Circuit's *Mallinckrodt* line of cases invites patentees to go a step further, tying the post-sale *uses* of patented goods to other goods sold or licensed by the patentee (e.g., "for combination only with other authorized components").

Mallinckrodt rule on innovation in software context); Richard H. Stern, *Post-Sale Patent Restrictions after Mallinckrodt—An Idea in Search of Definition*, 5 Alb. L.J. Sci. & Tech. 1, 12-19 (1994) (describing various post-sale restrictions likely to be imposed by patentees in the wake of *Mallinckrodt*).

Fifth, the Federal Circuit's ill-conceived inversion of the patent exhaustion doctrine threatens to encourage inefficient forms of price discrimination that will harm consumers. Many, perhaps most, post-sale use restrictions imposed by patent holders will be designed to facilitate price discrimination. Field-of-use and single-use restrictions, for example, are often used to charge different prices to different groups of customers, while preventing them from engaging in arbitrage. *See* Patterson, *supra*, at 159-60.

Questions of whether and in what circumstances price discrimination is socially desirable have long sparked controversy among economists, law-makers, and consumers alike. *See* William W. Fisher III, *When Should We Permit Differential Pricing of Information?*, 55 U.C.L.A. L. Rev. 1, 10-37 (2007) (describing consumer, legal, and economic perspectives on price discrimination). All patents grant some power to price discriminate. Where the patent exhaustion doctrine is concerned, however, a judicial grant of *expanded* price discrimination powers to patent owners is unwarranted.

As cogently explained by Professor Wendy Gordon, "price discrimination is at best a mode of ameliorating a monopoly's effects," and thus cannot serve as a justification for expanding patent scope and creating new

monopolies. Wendy J. Gordon, *Intellectual Property as Price Discrimination: Implications for Contract*, 73 Chi.-Kent L. Rev. 1367, 1390 (1998). To be sure, economists have long theorized that, "[i]n comparison with a monopolist charging a single price, a monopolist with a price-discrimination structure might be preferable." *Id.* at 1383. But where patented goods are concerned, the assumption of a single-price monopolist is rarely met, in large part because the patent exhaustion doctrine itself facilitates secondary markets that create competition for the patentee. By enabling these secondary markets, a robust patent exhaustion doctrine makes resort to the "second best" solution of a price-discriminating monopolist unnecessary. "Other things being equal, consumers are better off if price differences result not from one supplier's efforts to discriminate, but rather from the presence of additional suppliers." *Id.* at 1389.

If the ability of patentees to price discriminate requires buttressing, moreover, the job properly falls to Congress, not the courts. Economists and legal commentators agree that

> [I]t is impossible to say, in the abstract, whether price discrimination increases or decreases aggregate social welfare. Rather, whether it is beneficial from the standpoint of allocative efficiency depends upon the character of the markets that the discriminating firm seeks to keep separate—and that a ban on price discrimination would aggregate.

Fisher, *supra*, at 22; *accord* Louis Kaplow, *The Patent-Antitrust Intersection: A Reappraisal*, 97 Harv. L. Rev. 1813, 1874-78 (1984). In other words, the theoretical virtues of price discrimination in certain cases are offset by the costs of such discrimination in others. In addition, even where price discrimination does increase aggregate social welfare, it comes at an important cost—a precipitous increase in the consumer surplus appropriated by the monopolist. *See* Kaplow, *supra*, at 1875-76. The difficult task of weighing these costs, benefits, and uncertainties across the entire patent system and deciding whether patentees need expanded price discrimination powers is for Congress, not the Federal Circuit. *See* Gordon, *supra*, at 1383 (concluding that evaluation of the welfare impact of price discrimination involves "difficult empirical questions of a kind Congress is best able to resolve."); Pet. 44-45.

Moreover, the Federal Circuit's *Mallinckrodt* line of cases will encourage price discrimination not just among today's patent owners—it will also encourage others to engage in wasteful legal maneuvers to avoid limitations imposed in other areas of law. For example, in *Quality King Distribs., Inc. v. L'Anza Research Int'l, Inc.*, 523 U.S. 135 (1998), this Court refused to allow a hair care products manufacturer to use *copyrighted* labels to block reimportation of authorized products produced in the U.S. for sale abroad. In the wake of *Mallinckrodt*, however, companies may today be tempted to accomplish the same goal by relying on patent law. Already, a company called Net Enforcers is counseling manufacturers to obtain design patents on product packaging and similar features, emblazon their products with "not for resale" labels to evade the patent

exhaustion doctrine, and use patent infringement actions to block resale of the goods.[12] This tactic would accomplish with design patents what this Court held in *L'Anza* copyrighted labels could not.

* * *

The foregoing are illustrative (but likely not exhaustive) of the harms that the Federal Circuit's disruption of the patent exhaustion doctrine has caused, and will continue to cause, to consumers.[13]

By disregarding more than a century of patent exhaustion precedent and legislative acquiescence, the Federal Circuit has worked an unsupportable judicial expansion of the scope of the patent monopoly. With this expansion of patent scope will come a net wealth transfer from consumers to patent owners. *See* Stern, *Post-Sale Patent Restrictions, supra*, at 10-11 ("Probably, most of the time the result of the *Mallinckrodt* doctrine will be a wealth transfer from customers to the patentee."). Unless it can be shown that this additional diversion of consumer surplus into the pockets of patent owners is necessary in order to sustain adequate incentives for inventive activity, this transfer would constitute an undeserved windfall. *See Motion Picture Patents*, 243 U.S. at 511 ("It is undeniably true, that the limited and

---

[12] *See* Net Enforcers, "How to Virtually Eliminate Gray Market through Copyright, Trademark and Patent Enforcement" (http://www.netenforcers.com/pdf/scuba.pdf).

[13] For these same reasons, the Court should clarify that the patent exhaustion doctrine applies equally to method and apparatus claims. *See* Pet. 35-38.

temporary monopoly granted to inventors was never designed for their exclusive profit or advantage; the benefit to the public or community at large was another and doubtless the primary object in granting and securing that monopoly.") (quoting *Kendall v. Winsor*, 62 U.S. 322 (1858)).

III. Contract Law is the Proper Tool for Protecting the Patentee's Legitimate Interests in Restricting Post-Sale Uses.

While an endorsement of the Federal Circuit's *Mallinckrodt* rule would harm consumers, its rejection will impose no unfair hardship on patent owners. The restoration of this Court's patent exhaustion precedents simply puts patent owners back in the same position they were in prior to *Mallinckrodt*: "[I]t seemed clear for most of [the 20th] century that a patentee could go virtually nowhere in limiting its customers' conduct, except for restrictions shown necessary to protect health, safety, and product reliability." Stern, *Post-Sale Patent Restrictions, supra*, at 5. During those years, there was no indication that the exhaustion doctrine was undermining or damaging the patent system.

Nor does a robust patent exhaustion doctrine leave patent owners without the ability to control post-sale uses of their products; like owners of copyrights or tangible property, patentees may use contract law (rather than patent law) to enforce any legitimate post-sale use restrictions.

From the perspective of consumers, however, there are critical differences between post-sale use restrictions

imposed as a matter of contract and those enforced on pain of patent infringement liability. Contract law is much better adapted to take into account the countervailing policy concerns raised by such restrictions.

For example, as described above, one set of difficulties that arise from patent-based servitudes on patented goods is rooted in the problem of notice.[14] The problem of notice, moreover, is exacerbated as goods travel from hand to hand in secondary markets. Fortunately, contract law includes a variety of doctrines that mediate these notice issues, including assent and privity.

In addition to better addressing the requirement of notice, contract law also better reconciles post-sale use restrictions with the imperatives of federal antitrust and intellectual property policy. As pointed out by Petitioners, if post-sale use restrictions are deemed to be within the scope of the patent itself, there is a danger that such restrictions will be effectively immunized from antitrust scrutiny. In contrast, where restrictions are merely contractual in nature, antitrust law, supplemented by the patent misuse doctrine, can step in to regulate particular contracts and business arrangements. Pet. 50-51; Patterson, *supra*, at 169-71

---

[14] LGE appears to concede as much, arguing that post-sale restrictions should be enforceable in an infringement action, so long as the defendant had adequate notice of the restriction. However, rather than rely on well-developed contract law doctrines meant to address the problem of notice, LGE seemingly invites the courts to create a new set of notice doctrines for patent law.

(examining the excessive deference that arises from the Federal Circuit's "rule of reason" review of post-sale use restrictions by patentees after *Mallinckrodt*).

Moreover, where a contractual restriction is concerned, courts can apply federal conflict preemption principles to override restrictions that would improperly interfere with countervailing policies embodied in the patent laws. *See Lear, Inc. v. Adkins*, 395 U.S. 653, 674 (1969) (holding contract barring licensee from challenging patent validity void under patent law); Mark A. Lemley, *Beyond Preemption: The Law and Policy of Intellectual Property Licensing*, 87 Cal. L. Rev. 111, 139 (1999). In contrast, if this Court follows the Federal Circuit's lead and embraces post-sale use restrictions as authorized by the patent grant itself, then preemption principles will not apply.

Finally, contract law stands ready to strike down particular contract terms that are unconscionable or against public policy. Similar doctrinal bulwarks against unreasonable post-sale use restrictions are, at best, nascent in patent law, and would require years of additional litigation to develop. Although the Federal Circuit has articulated the requirement that post-sale use restrictions be "reasonably within the patent grant," *Mallinckrodt v. Medipart*, 976 F.2d at 708, that test has largely been overlooked by courts in the years since *Mallinckrodt*. *See* Patterson, *supra*, at 170-71, 176-81.

In short, consumers have reason to prefer a world where patentees must proceed under contract law if they desire to impose post-sale restrictions on their products.

CONCLUSION

For the foregoing reasons, this Court should reassert its exhaustion jurisprudence, overrule the Federal Circuit's *Mallinckrodt* line of cases, and reverse the Federal Circuit ruling below.

Respectfully submitted,

FRED VON LOHMANN
Counsel of Record
JASON SCHULTZ
ELECTRONIC FRONTIER FOUNDATION
454 Shotwell St.
San Francisco, CA 94110
(415) 436-9333

MARC N. BERNSTEIN
THE BERNSTEIN LAW GROUP, P.C.
555 Montgomery Street
Suite 1650
San Francisco, CA 94111
(415) 765-6634

Counsel for Amici Curiae

74 875a (16) 27pg

No. 06-937

FILED
NOV 13 2007
OFFICE OF THE CLERK
SUPREME COURT, U.S.

IN THE

Supreme Court of the United States

QUANTA COMPUTER, INC., QUANTA COMPUTER USA, INC., Q-LITY COMPUTER, INC., COMPAL ELECTRONICS, INC., BIZCOM ELECTRONICS, INC., SCEPTRE TECHNOLOGIES, INC., FIRST INTERNATIONAL COMPUTER, INC. AND FIRST INTERNATIONAL COMPUTER OF AMERICA, INC.

Petitioners,

v.

LG ELECTRONICS, INC.,

Respondent.

ON WRIT OF CERTIORARI TO THE UNITED STATES COURT OF APPEALS FOR THE FEDERAL CIRCUIT

BRIEF FOR CROPLIFE INTERNATIONAL AS AMICUS CURIAE SUPPORTING NEITHER PARTY

SETH P. WAXMAN
Counsel of Record
PAUL R.Q. WOLFSON
SAMBHAV N. SANKAR
WILMER CUTLER PICKERING
HALE AND DORR LLP
1875 Pennsylvania Ave., N.W.
Washington, D.C. 20006
(202) 663-6000

TABLE OF CONTENTS

Page

TABLE OF AUTHORITIES ii

INTEREST OF AMICUS CURIAE 1

INTRODUCTION AND SUMMARY OF ARGUMENT 2

ARGUMENT 3

I. THE BIOENGINEERED CROP INDUSTRY DEPENDS ON LICENSING LIMITATIONS BACKED BY PATENT LAW PROTECTIONS 3

A. The Bioengineered Crop Industry 4

B. CropLife Members Use A Variety Of Licensing Mechanisms To Recover Their Research And Development Investments 7

C. The Industry Cannot Rely Upon Contractual Mechanisms Alone 12

II. THE COURT SHOULD AVOID SUGGESTING THAT THE PATENT EXHAUSTION DOCTRINE COULD INVALIDATE LICENSING LIMITATIONS ON SELF-REPLICATING PATENTED PLANT PRODUCTS 14

A. Selling The First Generation Of A Patented Seed Does Not Exhaust The Patentee's Rights In Subsequent Generations Of Seeds Produced From The Original 15

B. The Patent Exhaustion Doctrine Does Not Address Prohibitions Against Making A Product 17

CONCLUSION 21

TABLE OF AUTHORITIES

CASES

Page(s)

Adams v. *Burke*, 84 U.S. 453 (1873) 18

American Cotton-Tie Co. v. *Simmons*, 106 U.S. 89 (1882) 15, 16

Bauer & Cie v. *O'Donnell*, 229 U.S. 1 (1913) 17

Brulotte v. *Thys Co.*, 379 U.S. 29 (1964) 18

Diamond v. *Chakrabarty*, 447 U.S. 303 (1980) 2, 8, 21

J.E.M. Ag Supply, Inc. v. *Pioneer Hi-Bred International, Inc.*, 534 U.S. 124 (2001) 8, 13

Keeler v. *Standard Folding Bed Co.*, 157 U.S. 659 (1895) 18

Kewanee Oil Co. v. *Bicron Corp.*, 416 U.S. 470 (1974) 8

Mitchell v. *Hawley*, 83 U.S. 544 (1873) 19

Monsanto Co. v. *McFarling*, 302 F.3d 1291 (Fed. Cir. 2002) 11, 16

Monsanto Co. v. *McFarling*, 363 F.3d 1336 (Fed. Cir. 2004) 16

Monsanto Co. v. *Scruggs*, 459 F.3d 1328 (Fed. Cir. 2006) 13, 14, 16

Motion Picture Patents Co. v. *Universal Film Manufacturing Co.*, 243 U.S. 502 (1917) 17

Pioneer Hi-Bred International, Inc. v. *Ottawa Plant Food, Inc.*, 283 F. Supp. 2d 1018 (N.D. Iowa 2003) 11

Straus v. *Victor Talking Machine Co.*, 243 U.S. 490 (1917) 17

TABLE OF AUTHORITIES—Continued

Page(s)

United States v. *Univis Lens Co.*, 316 U.S. 241 (1942) 15, 17, 19, 20

CONSTITUTIONAL AND STATUTORY PROVISIONS

U.S. Const. art I, § 8, cl. 8 8

35 U.S.C.
§ 101 4
§ 101 *et seq.* 8
§ 281 13
§ 283-285 13

OTHER AUTHORITIES

Brookes & Barfoot, *GM Crops: The Global Socio-Economic and Environmental Impact—the First Nine Years 1996-2004* (PG Economics Ltd., Oct. 2004), *available at* http://www.pgeconomics.co.uk/pdf/globalimpactstudyfinal.pdf 5, 6

Chambers, *Exhaustion Doctrine in Biotechnology*, 35 IDEA: The Journal of Law and Technology 289 (1995) 9, 12, 18

Council for Biotechnology Information, *Products in the Pipeline*, *available at* http://www.whybiotech.com/index.asp?id=2095 (last visited Nov. 12, 2007) 7

Fernandez-Cornejo & Caswell, *The First Decade of Genetically-Engineered Crops in the United States* (USDA, Apr. 2006), *available at* http://www.ers.usda.gov/publications/eib11/eib11.pdf 5

TABLE OF AUTHORITIES—Continued

Page(s)

http://www.goldenrice.org (last visited Nov. 12, 2007) 6

International Service for the Acquisition of Agri-Biotech Applications, Executive Summary of Brief 35-2006, *available at* http://www.isaaa.org/resources/publications/briefs/35/executivesummary/default.html (last visited Nov. 12, 2007) 4

Press Release, American Soybean Association, *Study Confirms Environmental Benefits of Biotech Soybeans* (Nov. 12, 2001), *available at* http://www.soygrowers.com/newsroom/releases/200120releases/r111201.htm 6

Press Release, DuPont, *DuPont Technologies Addressing Biofuels Challenges, Says Ethanol Biofuels Leader* (Oct. 2, 2007), *available at* http://www2.dupont.com/Biotechnology/en_US/news/index2. html 6

Sankula, *Quantification of the Impacts on US Agriculture of Biotechnology-Derived Crops Planted in 2005* (National Center for Food and Agricultural Policy, Nov. 2006) 5, 6

Savich, Monsanto *v.* Scruggs: *The Negative Impact of Patent Exhaustion on Self-Replicating Technology*, 22 Berkeley Tech. LJ. 115 (2007) 9

TABLE OF AUTHORITIES—Continued

Page(s)

Zimmermann & Qaim, *Projecting the Benefits of Golden Rice in the Philippines*, 51 ZEF–Discussion Papers on Development Policy (ZEF Bonn 2002), *available at* http://www.zef.de/fileadmin/webfiles/downloads/zef_dp/zef_dp51.pdf 7

In the Supreme Court of the United States

No. 06-937

QUANTA COMPUTER, INC., QUANTA COMPUTER USA, INC., Q-LITY COMPUTER, INC., COMPAL ELECTRONICS, INC., BIZCOM ELECTRONICS, INC., SCEPTRE TECHNOLOGIES, INC., FIRST INTERNATIONAL COMPUTER, INC. AND FIRST INTERNATIONAL COMPUTER OF AMERICA, INC.

Petitioners,

v.

LG ELECTRONICS, INC.,

Respondent.

ON WRIT OF CERTIORARI TO THE UNITED STATES COURT OF APPEALS FOR THE FEDERAL CIRCUIT

BRIEF FOR CROPLIFE INTERNATIONAL AS AMICUS CURIAE SUPPORTING NEITHER PARTY

INTEREST OF AMICUS CURIAE

CropLife International ("CropLife") is a membership organization representing the interests of the plant science industry.[1] CropLife's members include major biotechnology companies that hold valuable pat-

[1] Pursuant to Rule 37.6, CropLife states that no counsel for a party authored any part of this brief, that no party or its counsel made a monetary contribution intended to fund the preparation or submission of this brief, and that no person or entity other than CropLife or its members made such a contribution. Counsel of record for both parties have consented to the filing of this brief.

ents on plants, seeds, and plant genetic materials that replicate themselves in the course of normal use. As explained in further detail below, CropLife's members commercialize such products using limited licenses that allow growers to raise and sell one generation of crops, but not to save and replant the resulting crops to make subsequent generations of the patented product. CropLife members rely upon settled case law holding that the patent exhaustion doctrine does not invalidate such license limitations.

INTRODUCTION AND SUMMARY OF ARGUMENT

More than twenty-five years ago, this Court held that developers of novel living organisms may obtain utility patents for their inventions, and may exclude others from making, using, or selling them under the patent laws. *Diamond* v. *Chakrabarty*, 447 U.S. 303 (1980). Since then, biotechnology companies have invested large amounts of time and money to develop and patent bioengineered plants and plant genetic traits that improve upon familiar crops like soybeans, corn, and cotton. Bioengineered plant varieties can carry traits for, among other things, resistance to disease, insects, and herbicides, and thereby allow purchasers to produce more crops for less money. These benefits are so significant that American growers now use bioengineered plant varieties on over a hundred million acres of farmland—for some crops, over 90% of domestic production comes from bioengineered varieties.

Commercializing a patented plant variety or genetic trait poses special challenges. Because crop plants are self-replicating in normal use, a grower who purchases a particular seed or plant can replant the resulting crop to make many more such seeds and plants for his own use or for sale to others. If a grower were

allowed to do this with a patented plant, he could effectively compete with the patentee, preventing the patentee from recovering its research and development investments. Accordingly, crop biotechnology companies normally sell their products to growers pursuant to licensing agreements that limit the right to make future generations of patented products from the originals. Typically, a grower licensee is allowed to plant the patented seeds or plants and to raise crops for sale as commodities, but not to replant the crops to make new generations of the patented product.

The Federal Circuit has repeatedly held that the patent exhaustion doctrine does not apply to license limitations of this sort. It has recognized instead that in selling one generation of a patented seed or plant, a patentee does not relinquish any rights in subsequent generations grown from the original—which have never been "sold" for purposes of the exhaustion doctrine. In deciding the case at bar, the Court should leave this body of law undisturbed. In addition, this Court has only applied the exhaustion doctrine to invalidate restrictions on the *use* or *sale* of a product. The doctrine does not apply to license limitations that merely restrain a purchaser from freely *making* new copies of the product for himself.

ARGUMENT

I. THE BIOENGINEERED CROP INDUSTRY DEPENDS ON LICENSING LIMITATIONS BACKED BY PATENT LAW PROTECTIONS

Advances in biotechnology are bringing fundamental changes to agriculture. While growers continue the traditional process of breeding plants to improve their yield and quality, they are now joined by geneticists, molecular biologists, and plant scientists who work di-

rectly with the genetic code of crop plants to improve them. Using genetic engineering techniques, these biotechnology industry scientists are speeding efforts to improve the natural characteristics of crop plants, and inserting beneficial characteristics into such plants that might never be developed using conventional breeding methods alone. The industry has already commercialized many improved varieties of crop plants—planted on more than 100 million acres of domestic farmland and 250 million acres worldwide[2]—and is in the process of developing many more products that will offer significant advantages to growers.[3]

A. The Bioengineered Crop Industry

Using biotechnology and modern plant breeding techniques, CropLife members have developed crop plants and seeds that deliver many kinds of benefits to growers and society.

First, bioengineered crop plants can carry traits that allow growers to increase crop yield and net profit from each acre of their land. Growers in the United States currently raise bioengineered varieties of canola, corn, cotton, papaya, soybeans, and squash that contain

---

[2] International Service for the Acquisition of Agri-Biotech Applications, Executive Summary of Brief 35-2006, *available at* http://www.isaaa.org/resources/publications/briefs/35/executivesummary/default.html (last visited Nov. 12, 2007).

[3] CropLife focuses here on the relationship between the patent exhaustion doctrine and patents covering self-replicating bioengineered crops produced with the use of biotechnology techniques such as transformation and molecular marker assisted selection. However, all of the concerns discussed apply with equal force to any self-replicating plant, seed, cell, or genetic material that can be patented under 35 U.S.C. § 101.

yield-enhancing traits such as insect, disease, and herbicide resistance.[4] By taking advantage of those traits, domestic growers increased crop production by 8.3 billion pounds in 2005 even as they reduced their costs by $1.4 billion.[5] The benefits have been similar on a worldwide basis; one recent study reports that, between 1996 and 2004, growers used biotechnology to increase their incomes by a global total of $27 billion.[6] Such yield improvements must continue if food production is to keep pace with the expanding needs of the human population, which is projected to rise to almost eight billion in fifteen years. CropLife members are working to meet such needs by improving existing biotechnologies and developing new ones, including traits for improved nitrogen utilization and tolerance to cold, salinity, and drought.[7]

Bioengineered plants offer numerous environmental benefits as well. By incorporating genetic traits conferring pest resistance into crop plants, CropLife members allowed domestic growers to reduce pesticide use in crop production by more than 69 million pounds

---

[4] *See* Fernandez-Cornejo & Caswell, *The First Decade of Genetically-Engineered Crops in the United States* 6 (USDA, Apr. 2006), *available at* http://www.ers.usda.gov/publications/eib11/eib11.pdf.

[5] *See* Sankula, *Quantification of the Impacts on US Agriculture of Biotechnology-Derived Crops Planted in 2005*, at 2 (National Center for Food and Agricultural Policy, Nov. 2006).

[6] Brookes & Barfoot, *GM Crops: The Global Socio-Economic and Environmental Impact—the First Nine Years 1996-2004*, at 7 (PG Economics Ltd., Oct. 2005), *available at* http://www.pgeconomics.co.uk/pdf/globalimpactstudyfinal.pdf.

[7] Fernandez-Cornejo & Caswell, *supra* n.4, at 6.

in 2005.[8] Genetic traits conferring herbicide resistance also enable "no-till" farming practices that decrease wind and water erosion and increase soil fertility and biodiversity.[9] Herbicide and pest resistance traits have also reduced global carbon emissions by reducing fuel use; all told, fuel-use reductions permitted by planting bioengineered crops eliminated more than a billion kilograms of carbon emissions in 2004 alone.[10] Bioengineered crops even help to generate greener fuels—for example, by carrying traits that increase ethanol yield.[11]

Finally, bioengineered crops promise significant health and nutritional benefits. For example, hundreds of thousands of children in developing countries suffer from blindness caused by Vitamin A deficiency, and more than one billion women suffer from iron deficiency anemia, because traditional food sources such as rice do not supply enough of these nutrients. But with the support of CropLife member Syngenta, scientists have developed "Golden Rice" that is bioengineered to produce iron and beta carotene (which is converted to Vitamin A by the body).[12] One study estimates that the

---

[8] Sankula, *supra* n.5, at 3.

[9] Press Release, American Soybean Association, *Study Confirms Environmental Benefits of Biotech Soybeans* (Nov. 12, 2001), *available at* http://www.soygrowers.com/newsroom/releases/2001%20releases/ r111201.htm.

[10] Brookes & Barfoot, *supra* n.6, at 11-12.

[11] *See* Press Release, DuPont, *DuPont Technologies Addressing Biofuels Challenges, Says Ethanol Biofuels Leader* (Oct. 2, 2007), *available at* http://www2.dupont.com/Biotechnology/en_US/news/index2.html.

[12] *See* http://www.goldenrice.org (last visited Nov. 12, 2007).

health and welfare benefits of Golden Rice varieties in the Philippines alone could exceed $100 million.[13] Other scientists are developing bioengineered plant varieties that contain increased amounts of healthy antioxidants and omega-3 fatty acids, decreased amounts of harmful saturated fats, and even vaccines to prevent cervical cancer, hepatitis B, and other diseases.[14]

B. CropLife Members Use A Variety Of Licensing Mechanisms To Recover Their Research And Development Investments

The immense benefits that biotechnology has already delivered to growers and will deliver in the future do not come without cost. The process of researching promising genetic traits, incorporating them into crop plants, breeding useful varieties, and commercializing the resulting products is expensive and time-consuming. For example, Monsanto Company invested decades and hundreds of millions of dollars in developing a trait for tolerance to herbicides that could be used in crop plants, and Pioneer Hi-Bred International, Inc. and Syngenta (along with its predecessors) each invested comparable time and sums in developing crop plant traits for insect resistance. Although many of these investments have proven valuable in hindsight, for every innovation that is commercialized, biotechnol-

---

[13] Zimmermann & Qaim, *Projecting the Benefits of Golden Rice in the Philippines*, 51 ZEF–Discussion Papers on Development Policy (ZEF Bonn 2002), *available at* http://www.zef.de/fileadmin/webfiles/downloads/zef_dp/zef_dp51.pdf.

[14] *See* Council for Biotechnology Information, *Products in the Pipeline*, *available at* http://www.whybiotech.com/index.asp?id=2095 (last visited Nov. 12, 2007).

ogy companies must investigate numerous dead ends that do not yield significant economic return.

Though such concerns are especially salient in the biotechnology industry, they are hardly unique to it. Instead, they are the paradigmatic concerns faced by any company that invests in innovation in hopes of profiting from the result. To encourage such companies to risk "often enormous costs in terms of time, research, and development," *Kewanee Oil Co.* v. *Bicron Corp.*, 416 U.S. 470, 480 (1974), the Patent Clause of the U.S. Constitution gives Congress the power to "promote the Progress of Science and useful Arts, by securing for limited Times to Authors and Inventors the exclusive Right to their respective Writings and Discoveries." U.S. Const. art. I, § 8, cl. 8. This Court has recognized that the laws Congress has passed pursuant to the Patent Clause, *see* 35 U.S.C. § 101 *et seq.*, apply to protect not only those who develop novel inanimate objects, but also those who invent novel living organisms, including, among other things, bioengineered bacteria and plant breeds. *See Diamond* v. *Chakrabarty*, 447 U.S. 303, 313 (1980) ("[T]he relevant distinction [is] not between living and inanimate things, but between products of nature, whether living or not, and human-made inventions."); *J.E.M. Ag Supply, Inc.* v. *Pioneer Hi-Bred Int'l, Inc.*, 534 U.S. 124 (2001). So long as an otherwise patentable organism "is not nature's handiwork," *Chakrabarty*, 447 U.S. at 310, the patent laws reward its inventor with the right to exclude others from making, using, or selling it.

But despite the many similarities between living things and inanimate objects under the patent laws, there is at least one profound difference: patented living things can self-replicate, producing genetically-identical copies of themselves in the course of their use.

Just like conventional varieties, bioengineered seeds and plants multiply rapidly, leaving growers not only a lucrative crop that can be sold for food value, but also a source of seeds from which to begin another planting generation. As an example, soybean seeds can multiply more than thirty-fold in the course of a single generation, so that a grower can transform a single seed into 1.7 million copies in just four years. Thus, the end result of the costly and time-consuming process of developing a patentable crop plant is, paradoxically, a product that is so readily reproduced that growers can easily take its benefits for granted, forgetting the resources the patentee invested into developing it.

The self-replicating nature of patented plants poses challenges to the crop technology industry. CropLife members must recover their research and development outlays if they are to continue their work on behalf of growers everywhere. But if a company that invents a patented crop product allows purchasers to replicate the product for themselves, it will effectively give up any hope of such recovery. Absent any limitations on replication, the patentee would face immediate competition from every one of its customers, each of whom could immediately begin producing copies of the product for sale at prices that need not reflect the patentee's desire to secure an adequate return on its development costs. *See* Savich, Monsanto *v.* Scruggs: *The Negative Impact of Patent Exhaustion on Self-Replicating Technology*, 22 Berkeley Tech. L.J. 115, 115 (2007) (inventors of self-replicating technologies "face a unique challenge when trying to make a return on their investments . . . because every consumer turns into a potential producer"); Chambers, *Exhaustion Doctrine in Biotechnology*, 35 IDEA: The Journal of Law and Technology 289, 319 (1995) (absent prohibi-

tions on replication of patented organisms by purchasers, "[e]very purchaser of [a] transgenic organism would become a competitor of the inventor in the marketplace").

Because of these concerns, CropLife's members use licensing limitations on the replication of their patented crop plants and seeds to provide commercial access to their technologies without losing the ability to control free replication by their users. While the specifics of these limitations vary, they share several common features.

Some companies that invent and patent genetic traits also produce seeds incorporating the trait and sell the seeds directly to growers, subject to certain license limitations described below. Other patentees enter into licensing arrangements with seed companies, each of which is allowed to incorporate the patented trait into its own crop plant varieties.[15] Under such licenses, seed companies in various parts of the country are authorized to produce plants and seeds that combine patented traits with other locally valuable cultivation characteristics (germination time, heat tolerance, crop yield, etc.) and to sell the resulting seeds and plants to area growers.

Growers who purchase patented crop seeds—whether from a seed company or the patentee directly—also operate under a license from the patentee. That license typically includes several provisions. First, the grower is allowed to plant the patented seeds

---

[15] Where the company's patent reads directly on the seed or plant variety, rather than a genetic trait, the company may still license the production of patented seeds to a seed company.

or plants and to sell the resulting crop as a commodity on the open market. Second, the grower is not allowed to replant the resulting crop to create a new generation of patented products. (This practice is commonly known as "seed saving."); Third, the grower is restricted from transferring the purchased seed to a third party who is not licensed by the patentee. In some cases, the grower's license comes in the form of a bilateral contract with the patentee. *See, e.g., Monsanto Co.* v. *McFarling*, 302 F.3d 1291, 1293-1294 (Fed. Cir. 2002). In others, the grower adopts a license printed or placed directly upon containers of the product (known colloquially as "bag tags"). *See, e.g., Pioneer Hi-Bred Int'l, Inc.* v. *Ottawa Plant Food, Inc.*, 283 F. Supp. 2d 1018, 1024-1026 (N.D. Iowa 2003). The grower may pay a separate patent license fee directly to the patentee or may pay the license fee as part of the purchase price of the seeds.

By entering into such licenses, growers obtain the yield and environmental benefits of patented crop technologies for a single season without being forced to pay the high cost of obtaining unlimited rights to those benefits in perpetuity. After the sale of the resulting crop as a commodity, growers are free to buy another year's worth of the patented seed pursuant to a new license with the patentee, but they are also free to choose seeds containing different patented technologies or conventional unpatented seeds that do not require any licensing agreement at all. If growers were only allowed to obtain long-term patent licenses, the correspondingly high cost of such licenses might for practical purposes eliminate such freedom.

CropLife members also benefit from limited license arrangements because they can spread the costs of product development across a large number of users.

Absent such licensing arrangements, crop technology patentees would be forced to charge astronomical prices for their goods—prices that would approximate the value of the patent right itself. *See* Chambers, 35 IDEA at 319 (absent enforceable prohibitions on breeding patented organisms, selling a copy of the organism "would amount to handing over the keys to the factory"). It is not at all clear that any purchaser would be able to afford such prices. And even if such a purchaser did exist, small growers "would be unable to obtain these improved varieties and would have to compete from a technologically inferior position." *Id.*

C. The Industry Cannot Rely Upon Contractual Mechanisms Alone

Contractual remedies afforded by the licensing mechanisms discussed above allow crop plant patentees some measure of assurance that they can prevent unauthorized reproduction of their products. Nonetheless, contract remedies alone cannot adequately protect the industry's investments in patented crop technologies.

In particular, contract remedies do not afford patentees sufficient protection against the danger that patented crops will be transferred without authorization to third parties, who will then make use of the invention without a license from the patentee. Even if the third-party grower obtains patented seeds from a legitimate licensee, the third party may not be bound, as a matter of contract law, by any contractual provisions between the patentee and the original licensee. If the third-party transferee were not bound by such provisions, it could make the product in competition with the patentee, destroying the value of the patent. If the patentee could identify the licensee that improperly transferred the seeds in question, the patentee might

be able to seek contract damages for breach of the license agreement, but it could be difficult for the patentee to establish the proper measure of consequential damages, let alone recover them—especially given the magnitude of the potential injury from transferring a self-replicating product to (perhaps several) other parties. The situation would be even more problematic if the third party were to acquire the patented product from an unidentified or unlicensed source and without actual notice of the patentee's license restriction. In such a situation, the patentee might have no contractual means whatsoever to recover the value of its lost rights.

In contrast to the limited protections offered by contract law remedies, patent law allows the inventor of a self-replicating patented crop product to pursue remedies (including injunctive relief) against anyone who threatens to make or sell the product in competition with the patentee. *See* 35 U.S.C. §§ 281, 283-285. Unlike contractual prohibitions, patent law protections apply to any person who acquires a patented product, even if he is an unlicensed third-party transferee. CropLife members have thus relied on the patent laws to prevent unlicensed growers from multiplying improperly-acquired seeds into a source of seeds for future crop generations, *see, e.g.*, *Monsanto Co.* v. *Scruggs*, 459 F.3d 1328 (Fed. Cir. 2006) (infringement action against grower who had not executed patent license), and unauthorized resale of patented seed products by end purchasers, *see, e.g.*, *J.E.M. Ag Supply*, 534 U.S. at 124 (infringement action against purchaser who resold seeds). The availability of such suits is a crucial predicate to continued innovation in the crop biotechnology industry.

II. THE COURT SHOULD AVOID SUGGESTING THAT THE PATENT EXHAUSTION DOCTRINE COULD INVALIDATE LICENSING LIMITATIONS ON SELF-REPLICATING PATENTED PLANT PRODUCTS

As the foregoing discussion makes plain, while biotechnology companies currently invest tremendous resources to deliver improved crop seeds and plants to America's growers, those investments are based upon an understanding that the law allows developers of patented crop plants to prevent unauthorized replication of the technology the plants embody. Therefore, in considering whether the patent laws can be applied to enforce licensing restrictions on the use of microprocessor devices after their sale, this Court should keep in mind the special characteristics of self-replicating products and the special needs of crop plant developers. The Court should take care not to disturb the Federal Circuit's present understanding that nothing in the exhaustion doctrine forces a company to relinquish all the patent rights it holds on self-replicating plant material merely by selling individual seeds or plants on which the patent reads; as that court has recognized, "[a]pplying the first sale doctrine to subsequent generations of self-replicating technology would eviscerate the rights of the patent holder." *Scruggs*, 459 F.3d at 1336. In addition, the Court should recognize that the exhaustion doctrine has only been applied to invalidate licensing restrictions on the use or sale of a product. Where a license limitation restrains the purchaser from freely *making* new copies of the product for himself, the doctrine does not apply.

A. Selling The First Generation Of A Patented Seed Does Not Exhaust The Patentee's Rights In Subsequent Generations Of Seeds Produced From The Original

When a grower purchases a patented transgenic seed or plant from the patent holder or a licensed manufacturer, the grower may acquire certain rights to use that seed. Under existing patent law, the grower and the patentee can negotiate so that the grower can license only those patent rights that he can exploit himself and that he can afford. As described above, growers of patented crops typically choose to pay for the right to plant a patented seed and to produce a crop for sale as a commodity, but not the right to replant the crop to make subsequent generations of seeds.

The patent exhaustion doctrine generally provides that the unrestricted sale of an individual patented product "exhausts" the patentee's rights with respect to that particular product. *See generally United States* v. *Univis Lens Co.*, 316 U.S. 241 (1942). But even supposing that the doctrine requires a patentee to give up some minimum rights in a particular patented item when it is sold, in the case of patented seeds or plants that principle would only affect the patentee's rights with respect to the *first generation* of products sold to a grower. Where subsequent generations of seeds or plants produced from a patented original embody the patented characteristics, the patent will read upon them as well. And because such new generations have never been "sold" by anyone, the patent exhaustion doctrine cannot give the grower any rights with respect to them, nor deprive the patentee of any rights. Instead, when the new generation is produced, it is "made" anew and comes into being fully subject to the patentee's rights under Title 35. *Cf. American Cotton-*

Tie Co. v. *Simmons*, 106 U.S. 89, 93-94 (1882) (after patented item was destroyed in the course of use, using its parts to reconstruct the item anew infringed the patent).

The Federal Circuit has applied this reasoning in a line of cases involving patents held by CropLife member Monsanto that read on transgenic soybean and cotton seeds. These cases hold that a company that sells seeds or plants covered by a valid patent may use licensing limitations to: (1) require the purchasing grower to sell crops from his harvest as a commodity; (2) prohibit the grower from saving any portion of the crop for replanting; and (3) enforce such limitations through a cause of action for patent infringement. *See Monsanto Co.* v. *McFarling*, 302 F.3d 1291, 1298-1299 (Fed. Cir. 2002) ("[S]ince the new seeds were not sold by the patentee they entailed no principle of patent exhaustion."); *Monsanto Co.* v. *McFarling*, 363 F.3d 1336, 1343 (Fed. Cir. 2004) (because patents on soybeans "read on all generations of soybeans produced . . . prohibiting the replanting of the second generation of [patented] soybeans" does not extend a patentee's statutory rights); *Monsanto Co.* v. *Scruggs*, 459 F.3d 1328, 1336 (Fed. Cir. 2006) ("Without the actual sale of the second generation seed to Scruggs, there can be no patent exhaustion.").

Under these cases, when a patentee (or its licensed manufacturer) sells a particular seed or plant, the patent laws do not force him to relinquish any rights he holds in subsequent generations of seeds "made" from the original article so long as the patent reads upon them as well. Nor do the patent laws force the grower to buy such rights in order to buy the first-generation article. This conclusion is merely the logical consequence of the nature of the statutory right to exclude

that an inventor acquires by virtue of patenting his invention. That right allows the patentee to restrain others from making, using, or selling any article that falls within the claims of the patent, *regardless of its origin.* One cannot defend against an infringement claim by arguing that he has made the patented article independently—or even invented it independently. Similarly, in the context of self-replicating patented crop products, a grower cannot claim any rights over patented second-generation seeds merely because he produced them himself using first-generation seeds purchased from the patentee.

B. The Patent Exhaustion Doctrine Does Not Address Prohibitions Against Making A Product

The patent exhaustion doctrine is inapplicable to self-replicating crop plants for another related reason: it does not address license limitations that restrain a purchaser from freely making new copies of the product.

Instead, in every case in which this Court has applied the patent exhaustion doctrine to prevent a patentee from enforcing a restriction concerning its patented goods, the restriction has concerned the "sale" or "use" of the product. *See, e.g., Univis Lens*, 316 U.S. at 250 (holding that patentee could not enforce license restrictions on "the use or disposition" of patented lens blanks); *Motion Picture Patents Co.* v. *Universal Film Mfg. Co.*, 243 U.S. 502 (1917) (rejecting infringement claim based on violation of license restriction prohibiting use of movie projector to display certain films); *Straus* v. *Victor Talking Mach. Co.*, 243 U.S. 490 (1917) (rejecting infringement claim based on "use" restriction in license intended to control resale price of patented article); *Bauer & Cie* v. *O'Donnell*, 229 U.S. 1 (1913)

(rejecting infringement claim based on minimum resale price restriction printed on package) (citing *Bobbs-Merrill Co.* v. *Straus*, 210 U.S. 339 (1908)); *Keeler* v. *Standard Folding Bed Co.*, 157 U.S. 659 (1895) (rejecting infringement claim based on purchase of folding beds and resale in territory other than where they were licensed for sale); *Adams* v. *Burke*, 84 U.S. 453 (1873) (rejecting infringement claim based on use of a coffin outside sales territory in which it was purchased).

Limiting application of the exhaustion doctrine to the rights to sell and use a patented product follows logically from the structure of the patent laws. The right "to make, the right to sell, and the right to use" a patented article are distinct, and the patentee may convey them together or separately as he wishes. *Brulotte* v. *Thys Co.*, 379 U.S. 29, 31 (1964). Applying the patent exhaustion doctrine to require a patentee to transfer the right to "make" a patented article as a necessary consequence of conveying any other rights would not only erase any distinction between the elements of the patent right, but also make it impossible for the patentee to realize the value of that right in the case of self-replicating technologies. *See* Chambers, 35 IDEA at 320-321 ("[R]eading the Exhaustion Doctrine in the broadest sense possible, and implying a legal right to use [a] replicating organism in any manner the purchaser wishes, could harm the economic incentives of the patent system.").

Patentees normally do not need to place or enforce limitations on an end user's right to "make" a patented article because, in most cases, products cannot be "used" to make copies of themselves. And in the rare situation in which an inanimate patented good *could* be used to copy itself—*e.g.*, in the case of a patented lathe

that could be used to turn the parts for another identical lathe—it would be clear that a purchaser does not acquire the right to make the copy simply by buying the patented original. *See Mitchell* v. *Hawley*, 83 U.S. 544, 548 (1873) ("[T]he purchaser of the implement or machine for the purpose of using it in the ordinary pursuits of life . . . does not acquire any right to construct another machine either for his own use or to be vended to another for any purpose.").

For some categories of products, however, a purchaser must necessarily "make" a patented product in order to "use" it. The petition for certiorari in this very case identified one such category: computer software. As the petition recognized, "a new, potentially infringing, 'copy' of computer software is created every time that software is loaded into memory." Pet. 8. Petitioners noted that software patentees address this problem by characterizing their users as "licensees" rather than purchasers. *Id.* ("software must always be licensed, not sold"). Petitioners' merits brief acknowledges that "[s]elf-replicating seeds pose the same problem" as computer software, Pet. Br. 43 n.13, and thus implicitly recognizes that the patent exhaustion doctrine cannot sensibly apply to sales of such products. As with computer software, copies of self-replicating seeds and plants must typically be made in order for the products to be used.

Moreover, unlike a patentee who seeks to maintain downstream price or alienation restrictions on a physical product, *see, e.g.*, *Univis Lens*, 316 U.S. at 244-245, a biotechnology patentee that limits a grower's right to make copies of an original seed or plant does not foreclose the grower's right to put the original to valuable use. To the contrary, a grower that purchases patented seeds pursuant to a seed-saving prohibition can still use

them for their most obvious and immediate purpose: raising crops for commodity sale. Growers who purchase and license patented seeds or plants to produce commodity crops thus differ from Petitioners, who maintain that Respondent's patent license terms foreclose their ability to put the microchips at issue to "their only reasonable use." Pet. 9; *see also Univis Lens*, 316 U.S. at 249 ("sale of an article which is capable of use *only in practicing the patent* is a relinquishment of the patent monopoly" (emphasis added)).

This Court's patent exhaustion decisions make clear that the doctrine does not invalidate limitations placed on a purchaser's right to "make" new copies of a product. Where a product *must* be "made" in order to be used, licensing limitations that are designed to allow a patentee to sell its products without also selling an unrestricted right to copy them similarly do not run afoul of the doctrine. Whatever might be the correct outcome in the case at bar, this case does not concern such limitations.

CONCLUSION

Amicus CropLife expresses no view as to the outcome of the case at bar. However, the organization and its members urge this Court not to call into question the settled principle that inventors of self-replicating crop plants may rely upon the patent laws to enforce limitations upon making subsequent generations of plants and seeds from patented originals, where the patent reads on both the original and its progeny. Any contrary suggestion would, practically speaking, eliminate the value of patents on crop plants and impair the Court's own conclusion that inventors may exercise patent rights over novel living organisms. *See Chakrabarty*, 447 U.S. at 313.

Respectfully submitted.

SETH P. WAXMAN
Counsel of Record
PAUL R.Q. WOLFSON
SAMBHAV N. SANKAR
WILMER CUTLER PICKERING
HALE AND DORR LLP
1875 Pennsylvania Ave., N.W.
Washington, D.C. 20006
(202) 663-6000

NOVEMBER 2007

No. 06-937

In the Supreme Court of the United States

QUANTA COMPUTER, INC., ET AL.,

Petitioners,

v.

LG ELECTRONICS, INC.

Respondent.

On Writ of Certiorari to the United States Court of Appeals for the Federal Circuit

BRIEF OF DELL INC., HEWLETT-PACKARD, CO., CISCO SYSTEMS, INC., AND EBAY INC. AS AMICI CURIAE IN SUPPORT OF PETITIONERS

ANDREW J. PINCUS
Counsel of Record
CARL J. SUMMERS
Mayer Brown LLP
1909 K Street, NW
Washington, DC 20006
(202) 263-3000

Counsel for Amicus Curiae Dell Inc.

TABLE OF CONTENTS

	Page
TABLE OF AUTHORITIES	ii
INTEREST OF THE AMICI CURIAE	1
SUMMARY OF ARGUMENT	3
ARGUMENT	5
I. THE EXHAUSTION DOCTRINE BARS INFRINGEMENT CLAIMS AGAINST THE PURCHASER IN AN AUTHORIZED SALE OF AN ARTICLE THAT PRACTICES THE PATENT	5
A. Patent Owners Can And Do Realize The Full Economic Value Of Their Patents In The First Authorized Sale.	8
B. The Federal Circuit's Novel "Optional Exhaustion" Doctrine Would Encourage The Assertion Of Abusive Infringement Claims Against Downstream Purchasers Of Patented Products.	12
C. Patent Owners Can Enforce Conditions On A Sale Through Contract Law, And Should Not Be Given The Added Coercive Power Of Patent Law.	22
II. THERE IS NO EXCEPTION TO THE EXHAUSTION DOCTRINE FOR METHOD CLAIMS ASSOCIATED WITH A PATENTED ARTICLE	25
CONCLUSION	27

TABLE OF AUTHORITIES

Page(s)

CASES

Bandag, Inc. v. *Al Bolser's Tire Stores, Inc.*, 750 F.2d 903 (Fed. Cir. 1984) 25, 26

Bloomer v. *McQuewan*, 14 How. 539 (1852) 6

eBay Inc. v. *MercExchange, L.L.C.*, 126 S. Ct. 1837 (2006) ..... *passim*

General Talking Pictures Corp. v. *Western Elec. Co.*, 305 U.S. 124 (1938) 8

Glass Equip. Dev., Inc. v. *Besten, Inc.*, 174 F.3d 1337 (Fed. Cir. 1999) 26

KSR Int'l Co. v. *Teleflex Inc.*, 127 S. Ct. 1727 (2007) 4, 16

Keeler v. *Standard Folding Bed Co.*, 157 U.S. 659 (1895) 6, 10, 22

Pennock v. *Dialogue*, 27 U.S. (2 Pet.) 1 (1829) 21

United States v. *Masonite Corp.*, 316 U.S. 265 (1942) 4, 6, 21

United States v. *Univis Lens*, 316 U.S. 241 (1942) ..... *passim*

CONSTITUTIONS AND STATUTES

U.S. Const., Art. I, § 8, cl. 8 5

35 U.S.C. §§ 31 & 40 5

35 U.S.C. § 283 24

35 U.S.C. §§ 284 & 285 25

MISCELLANEOUS

Am. Intellectual Prop. Law Ass'n, REPORT OF THE ECONOMIC SURVEY (2007) 21

TABLE OF AUTHORITIES—continued

Page(s)

James Bessen & Michael J. Meurer, *Lessons for Patent Policy from Empirical Research on Patent Litigation*, 9 LEWIS & CLARK L. REV. 1 (2005) 20

Fed. Trade Comm'n, TO PROMOTE INNOVATION: THE PROPER BALANCE OF COMPETITION AND PATENT LAW AND POLICY (Oct. 2003) .....*passim*

Glen Fest, *Patently Unaware*, Bank Technology News (April 2006) (available at http://tinyurl.com/yrxdhv) 19

Bronwyn H. Hall & Rosemarie Ham Ziedonis, *The Patent Paradox Revisited: An Empirical Study of Patenting in the U.S. Semiconductor Industry, 1979–1995*, 32 RAND J. ECON., NO. 1 (2001). 14, 15

Matt Hines, *Graphics Patent Suit Targets Dell, Others*, CNET News.com (Apr. 23, 2004) (available at http://tinyurl.com/ae73h) 19

Adam B. Jaffe & Josh Lerner, INNOVATION AND ITS DISCONTENTS (2004) 16

Peter Judge, *Wi-Fi world under threat from Symbol patent: Wireless vendor to seek license fees from all Wi-Fi equipment vendors*, Techworld.com (Sep. 23, 2004) (available at http://tinyurl.com/gjt2s) 19

Mark A. Lemley & Kimberly A. Moore, *Ending Abuse of Patent Continuations*, 84 B.U. L. Rev. 63 (2004) 20

TABLE OF AUTHORITIES—continued

Page(s)

Nat'l Research Council for the Nat'l Academies, A PATENT SYSTEM FOR THE 21ST CENTURY (Stephen A. Merrill et al. eds., 2004) 14

PriceWaterhouseCoopers, 2006 Patent and Trademark Damages Study 21

Carl Shapiro, *Navigating the Patent Thicket: Cross Licenses, Patent Pools, and Standard Setting*, *in* 1 Innovation Policy and the Economy 119 (Adam B. Jaffe et al. eds., 2000) 14, 15, 16

BRIEF OF DELL INC., HEWLETT-PACKARD, CO., CISCO SYSTEMS, INC., AND EBAY INC. AS AMICI CURIAE IN SUPPORT OF PETITIONERS

INTEREST OF THE AMICI CURIAE

Amici Dell Inc. and Hewlett-Packard Company are leading manufacturers of personal computers and other technology products. Cisco Systems, Inc., a recognized leader in internet technology, sells software, hardware, and services that together provide fast, durable, and secure networks over the internet for business, education, government, and home communications. These products incorporate many patented components and processes. Amicus eBay Inc. provides a global online marketplace for others to buy and sell, among other items, technological products such as those sold by the other amici.[1]

Many of the computers manufactured by amici Dell Inc. and Hewlett-Packard Company incorporate microprocessor chips manufactured by Intel Corporation and memory components manufactured by other companies. In some cases, amici purchase the chips and memory from an outside firm as a single assembled component. In others, amici purchase the chips and memory separately and assemble the subcomponents themselves. Petitioners are among the firms from which amici purchase the assembled component.

---

[1] Pursuant to Rule 37.6, amici affirm that no counsel for a party authored this brief in whole or in part and that no person other than amici and its counsel made a monetary contribution to its preparation or submission. The parties' letters consenting to the filing of amicus briefs have been filed with the Clerk's office.

Respondent LG Electronics, Inc. takes the position—endorsed by the Federal Circuit in this case—that even though it has received a royalty from Intel for patents allegedly infringed by Intel's microprocessor chips (when combined with memory), it can extract another royalty payment from petitioners because it included a condition in the license granted to Intel stating that purchasers from Intel did not receive a "license" from respondent to use Intel products "by combining [them] with any non-Intel product." J.A. 143-44. Amici have learned that respondent already is imposing a similar limitation on the "license" that it is granting to the former defendants to this action that have settled with respondent. Accordingly, amici have every reason to believe that if the Federal Circuit's decision is permitted to stand, respondent will seek to require amici to pay yet a third royalty for the same articles.

Of course, the Federal Circuit's legal standard is not limited to the patents owned by respondent. Three of the four amici are engaged in the frequent purchase and sale of technology products. Many of the products bought and sold by amici consist of hundreds or even thousands of components, each of which can implicate a number of patents. Those components, like the component here, often are manufactured and assembled in multiple steps by multiple entities before reaching amici. The regime created by the Federal Circuit's revision of the patent exhaustion doctrine allows each patent owner to work its way through every manufacturing chain that in any way implicates its patents, extracting a separate royalty for the same invention at each stage of the process. It also adds unjustified costs to manufacturing and distribution processes without serving any purpose of the patent system.

With respect to amicus eBay, Inc., this regime exposes eBay's downstream sellers to claims of patent infringement for the resale of previously purchased products. It also already has subjected eBay to patent-owner pressure to remove listings of the allegedly infringing items and to sanction its sellers.

Equally harmful is the Federal Circuit's holding that exhaustion can never apply to patent claims relating to the "method" of using a patented article (in contrast to the patent's "apparatus" claims, which describe the article itself, and which at least remain eligible for the Federal Circuit's newly-truncated exhaustion doctrine). Here, for example, respondents' patents included both "apparatus" claims describing the patented article and "method" claims expressing the means of using and enjoying the patented article.

Under this Court's jurisprudence, patent exhaustion applies to any method claim that simply describes the intended use and enjoyment of the exhausted apparatus claims embodied in an article. If the rule were otherwise, every patentee could avoid exhaustion entirely simply by adding to his apparatus claims a method claim describing how to use the article.

Because of the significant effect of the Federal Circuit's ruling on these two aspects of the exhaustion doctrine, amici have a strong interest in urging the Court to overturn the Federal Circuit and reinstate the doctrine of patent exhaustion as previously articulated by this Court.

SUMMARY OF ARGUMENT

The doctrine of patent exhaustion appropriately circumscribes the bundle of rights granted to patentees by Congress. Those rights are intended to encourage innovation but come at a significant cost to

other market participants and are "restrictive of a free economy" (*United States* v. *Masonite Corp.*, 316 U.S. 265, 280 (1942)). Indeed, this Court recently recognized that when patent rights are not appropriately defined, "patents might stifle, rather than promote, the progress of useful arts." *KSR Int'l Co.* v. *Teleflex Inc.*, 127 S. Ct. 1727, 1746 (2007). The Court accordingly has emphasized that the rights granted to a patentee should be interpreted so as not to go beyond what is essential to "the necessary requirements of the patent statute." *Masonite Corp.*, 316 U.S. at 278-80.

The patent exhaustion doctrine is a long-settled limitation on patent owner rights that advances the purposes of the patent act efficiently while avoiding harmful consequences. It protects the patent owner's right to compensation for the use of its invention by others while at the same time providing a clear standard precluding the assertion of infringement claims against those who purchase patented articles. The doctrine holds that upon the purchase of an article in an authorized sale—from either the patentee or a licensee authorized by the patentee to make and sell the article—the patentee's rights with respect to that article are exhausted.

The Federal Circuit in this case abandoned the doctrine of patent exhaustion as it has been defined by this Court for over a century. The lower court's new regime is not necessary to enable patent owners to obtain full compensation for use of their invention, will create considerable confusion and uncertainty for downstream participants in the manufacturing process (as well as for sellers and the ultimate users of any products containing components implicating a patent), and opens the door to new, and very substantial, abusive patent infringement claims. Long a

clear, understandable constraint on patent rights, the doctrine of patent exhaustion has been reduced by the Federal Circuit to a mere default rule of contract interpretation that easily is avoided, opening the door to infringement actions against any person or entity that uses or sells a patented article at any point in its travels through commerce.

Moreover, by categorically excluding all method claims from the patent exhaustion doctrine, the Federal Circuit has created an exception that swallows the rule—allowing patentees to avoid exhaustion simply by adding a method claim that describes the intended use of their apparatus claim. Rather, it is common sense, and good patent policy, that the exhaustion of an apparatus claim upon the first authorized sale of a patented article also exhausts any method claim that describes the intended use and enjoyment of that apparatus claim.

The patent regime contemplated by the Federal Circuit's ruling is impractical, unfair, and inefficient. It does not best serve the purpose of the patent system—promoting the progress of science and the useful arts—but only furthers the goals of those seeking to extract multiple royalties on the same patented article or otherwise extend the power of their patent beyond the receipt of the royalty that they are due.

ARGUMENT

I. THE EXHAUSTION DOCTRINE BARS INFRINGEMENT CLAIMS AGAINST THE PURCHASER IN AN AUTHORIZED SALE OF AN ARTICLE THAT PRACTICES THE PATENT.

"The declared purpose of the patent law is to promote the progress of science and the useful arts by granting to the inventor a limited monopoly, the

exercise of which will enable him to secure the financial rewards for his invention." *United States* v. *Univis Lens*, 316 U.S. 241, 250 (1942) (citing U.S. Const., Art. I, § 8, cl. 8; 35 U.S.C. §§ 31 & 40). That purpose "is fulfilled with respect to any particular article when the patentee has received his reward for the use of his invention by the sale of the article[;] * * * once that purpose is realized the patent law affords no basis for restraining the use and enjoyment of the thing sold." *Id.* at 251.

Accordingly, "[t]he first vending of any article manufactured under a patent puts the article beyond the reach of the monopoly which that patent confers." *Id.* at 252. And any condition on the use and enjoyment of a patented article after an authorized sale "derives ***no support from the patent***," but instead, "must stand on the same footing * * * as like stipulations with respect to unpatented commodities." *Id.* at 251 (emphasis added); see also *Keeler* v. *Standard Folding Bed Co.*, 157 U.S. 659, 666 (1895) (whether a patent owner can impose conditions on the post-sale use and enjoyment of a patented article is "a question of contract, and not [a question] under the inherent meaning and effect of the patent laws").[2]

This Court also made clear in *Univis Lens* that all patent rights are exhausted upon the first sale, "[w]hether the [patent owner or] licensee sells the

---

[2] *Accord Masonite Corp.*, 316 U.S. at 277-78 ("There are strict limitations on the power of the patentee to attach conditions to the use of the patented article. As Chief Justice Taney said in *Bloomer* v. *McQuewan*, 14 How. 539, 549, when the patented product 'passes to the hand of the purchaser, it is no longer within the limits of the monopoly. It passes outside of it, and is no longer under the protection of the act of Congress.'") (emphasis and internal citation omitted).

patented article in its completed form or sells it before completion for the purposes of enabling the buyer to finish and sell it." 316 U.S. at 252.[3]

Notwithstanding the clarity of this Court's holding in *Univis Lens* regarding the exhaustion doctrine, the Federal Circuit in this case adopted a different principle that allows a patent owner to easily circumvent *Univis Lens*. According to the decision below, "[i]t is axiomatic that the patent exhaustion doctrine commonly referred to as the first sale doctrine, is triggered by an unconditional sale * * * [but] does not apply to an expressly conditional sale or license." Pet. App. 5a-6a. In other words, the Federal Circuit has turned an essential constraint on the limited rights granted to a patentee—that they extend to the first authorized sale of an article manufactured under the patent but no further—into an optional limitation, easily avoided by altering the terms of sale.

The Federal Circuit's rule not only is inconsistent with this Court's precedents, it serves no useful purpose under the Patent Act, encourages the assertion of abusive infringement claims against downstream purchasers of patented products, and imposes significant unnecessary transactional costs on the manufacturing process.

---

[3] The district court in the present case found that the factual predicate relied upon by the Court in *Univis Lens* is satisfied here: the microprocessors sold to the defendants by Intel were "destined * * * to be finished by the purchaser in conformity with the patent because they have no reasonable non-infringing use." Pet. App. 46a (internal quotation marks omitted). That factual finding was not disturbed on appeal.

A. Patent Owners Can And Do Realize The Full Economic Value Of Their Patents In The First Authorized Sale.

The patent exhaustion doctrine allows the owner of a patent to extract the entire value associated with the use of the invention embodied in a particular article at a single—and extremely logical—step in the chain of commerce: when the patent owner sells the article or licenses another to manufacture and sell the article.[4] The patent owner at that point has both the opportunity and the negotiating leverage to demand a payment reflecting the full value of the use of its invention over the life of the article. If that sum is not paid, the patent owner's monopoly rights en-

---

[4] By licensing another to manufacture and sell the patented article, the patent owner essentially authorizes someone else to step into its shoes. In that case, the patent owner may negotiate its royalty with its licensee, but also can control the licensee's negotiations with purchasers if it so chooses. See *General Talking Pictures Corp.* v. *Western Elec. Co.*, 305 U.S. 124, 127 (1938). What it cannot do under this Court's decision in *Univis Lens* is to retain the right to assert infringement claims against those purchasers. Although *General Talking Pictures* held that the purchaser, in addition to the manufacturing licensee, was guilty of infringement for a sale that violated a field-of-use restriction in the manufacturing license, that was only because the purchaser "ordered, purchased and leased [the unlicensed device] knowing the facts" (305 U.S. at 126), placing it "in no better position than if it had manufactured the [device] itself without a license" (*id.* At 127). In other words, the purchaser was guilty of contributory infringement because of its participation in a conspiracy to violate the manufacturing license. The Court did ***not*** hold that a field-of-use limitation in the manufacturing license would constrain a purchaser in the normal course. In fact, it explicitly reserved that question (*ibid.*), although the authorities discussed above teach that the purchaser would take the device free of any claims under the patent law.

able him to prevent the first purchaser from obtaining the article (or a manufacturer from producing it).

And the first purchaser will be willing and able to pay an amount sufficient to meet the patent owner's demands—as long as the patent owner has properly assessed the economic value of its invention to the ultimate users—because it has the ability to pass along that cost to its customers. The value of the invention, as reflected in the royalty paid by the first purchaser for that invention, becomes just another part of the negotiations over the terms of subsequent sales of the article. In this way, the total royalty paid to the patent owner by the first purchaser is naturally and efficiently distributed, through normal market forces, across every party that owns and makes use of the invention according to the value that each party assigns to the invention.

Because the patent owner thus receives the full royalty that it is due for its invention as embodied in that article, the exhaustion doctrine ensures that the first purchaser acquires all of the normal rights of ownership relating to the sale and use of the article. And when the first purchaser sells the article (whether to a manufacturer, distributor, or end user) and seeks to pass along the cost of the royalty paid to the patent owner, its customer will be protected against the threat of paying twice for the invention: once to the first purchaser and a second time in an infringement action asserted against it by the patent owner.

These legal rules thus allow the patent system to fulfill its function—encouraging progress in the useful arts by rewarding innovation—with minimal intrusion into the operation of the free market and minimal disturbance to the normal conception of ownership. Long ago, this Court recounted the virtues of

that traditional doctrine of patent exhaustion—a full reward for the inventor, simplicity for all parties, and peace for owners of the patented article—and opined that "[t]he inconvenience and annoyance to the public that an opposite conclusion would occasion are too obvious to require illustration." *Keeler*, 157 U.S. at 667.

The Federal Circuit in this case reached that very "opposite conclusion" by treating the doctrine of patent exhaustion as nothing more than an assumption about the intent of contracting parties, making exhaustion entirely optional depending on the conditions that the patent owner attaches to a sale of a patented article. The "inconvenience and annoyance" that this Court predicted over a century ago—in particular, an economically irrational system of bewildering complexity—is certain to ensue. See Part B, *infra*.

Moreover, in contrast to this Court's patent exhaustion jurisprudence, under which the patent owner extracts the entire royalty that it is due for its invention at a single point, the system advocated by respondent and endorsed by the Federal Circuit requires multiple separate negotiations between the patent owner and each entity that ever owns or uses the article in question. These negotiations are in addition to those between the firms that buy and sell the article and may come as an unwelcome surprise to subsequent purchasers to whom the patent owner is a complete stranger.

The Federal Circuit's regime also adds uncertainty and search costs to the already complex process of purchasing components for technology products. As described in more detail below, when technology firms design products and source components, they often are unable to acquire full information

about the various intellectual property rights implicated by those components. The Federal Circuit's holding means that even when a vendor is authorized by a patent owner to sell articles practicing its patent, a purchaser still cannot be sure that the component is free of the patent owner's intellectual property claims. To obtain certainty, a purchasing firm would need to investigate the specific terms of the patent owner's agreement with the vendor (as well as its agreements with every prior owner of the patented component)—essentially conducting a title search on each component that it purchases. And if the vendor has paid only a "partial royalty," the purchasing firm would need to discover the actual amounts paid by the vendor and every other prior owner of the patented article in order to estimate its own potential exposure to further royalty payments. Of course, such information will rarely if ever be available.[5]

These additional transaction costs serve no useful purpose under the patent laws. Certainly neither the Federal Circuit nor respondent has explained why this very substantial expansion of the bundle of rights granted to patent holders by the Patent Act is necessary to further the purposes of the Act rather than simply to benefit the financial interests of aggressive patent owners. Specifically, respondent has never explained why it could not have obtained the full royalty that it is due through a single payment from Intel. The added transaction costs and uncer-

[5] As the redacted petition in this case demonstrates, negotiations over patent rights and cross-licensing in the high technology field are very sensitive, confidential, and often quite literally opaque to other parties. Downstream users are in most instances simply unable to gain information about the outcome of prior negotiations over intellectual property rights.

tainty inherent in respondent's strategy by themselves show that, far from promoting the development of science and the useful arts, this regime impedes that progress.

As we next discuss, the Federal Circuit's rule is not only unnecessary to enable patent owners to exploit their monopoly fully, it will produce very significant injury to the interests in innovation protected by the patent law.

B. The Federal Circuit's Novel "Optional Exhaustion" Doctrine Would Encourage The Assertion Of Abusive Infringement Claims Against Downstream Purchasers Of Patented Products.

The Federal Circuit rationalized the result in this case as follows: "The theory behind" the patent exhaustion doctrine is that, in "[a]n unconditional sale of a patented device," "the patentee has bargained for, and received, an amount equal to the full value of the goods," but in "an expressly conditional sale or license * * * it is more reasonable to infer that the parties negotiated a price that reflects only the value of the 'use' rights conferred by the patentee." Pet. App. 5a. That not only misconstrues the nature of the patent exhaustion doctrine—which is a fundamental restriction on the rights granted to patent owners, not an assumption about the intent of a contracting party—it also is bad policy founded on a false premise.

The regime envisaged by the Federal Circuit, where patent owners can partition their rights in a patented article and sell those rights piecemeal, obtaining a portion of the total royalty from each entity that purchases or uses the article (presumably according to the proportional value derived from the

invention by each entity), is economically and practically unrealistic.

No business contemplating manufacture or use of an article that infringes a patent would enter into a licensing agreement with—and pay significant value to—a patent owner, when that business's customers could not use or sell the resulting products without negotiating a separate license with the patent owner. The business would be purchasing the right to make a product that is literally worthless to its customers unless a future contingency occurs over which it has no control.[6]

Thus, in the situation in which patent rights were negotiated at the outset—before significant investment in the alleged infringing article—the new version of the exhaustion doctrine formulated by the Federal Circuit would be completely impractical. Theoretically, the patent owner could undertake multiple, simultaneous negotiations with each entity that would own or use the article in question so that each firm would know that it would have a market that had permission to use its product. But that is not a realistic, or even an efficient or desirable, method of negotiating a royalty, particularly given the enormously complex intellectual property rights that are implicated by many modern products.[7]

---

[6] As we discuss below in Part B, Intel's decision to enter into an agreement with respondent here reflects the additional leverage of a patent owner who enters the scene only after a product is well-established.

[7] Moreover, as petitioners point out (Pet. Br. 49 & n.16), economic theory indicates that a patent owner should not be able to obtain greater royalty payments by negotiating in such a piecemeal fashion because there is, in theory, but a single monopoly profit available to a manufacturing monopoly. As we discuss in Part B, amici believe that, in the real world, respondent's

Rather, as the circumstances of this case make clear, the only situation in which respondent's strategy makes sense for a patent owner is when the patent owner asserts its claim ***after*** the target has made a significant investment in the alleged infringing technology. In that context, the Federal Circuit's rule will promote abusive infringement claims that deter progress in the useful arts by imposing substantial costs upon the creators of new products and services, or—even worse—by erecting an insuperable barrier that will prevent bringing those new products and services to markets.

1. Many products and services—especially those in the computer hardware and software, aviation, financial services, telecommunications, and biotechnology sectors—incorporate inventions reflected in hundreds or even thousands of patents, some of which may be defined ambiguously. See Fed. Trade Comm'n, TO PROMOTE INNOVATION: THE PROPER BALANCE OF COMPETITION AND PATENT LAW AND POLICY CH. 3, AT 15-56 (Oct. 2003) [hereinafter FTC REPORT]; Carl Shapiro, *Navigating the Patent Thicket: Cross Licenses, Patent Pools, and Standard Setting*, *in* 1 INNOVATION POLICY AND THE ECONOMY 119, 125-26 (Adam B. Jaffe et al. eds., 2000). Thus, a single computer program may practice hundreds or thousands of patents (Nat'l Research Council for the Nat'l Academies, A PATENT SYSTEM FOR THE 21ST CENTURY 37 (Stephen A. Merrill et al. eds., 2004)) and "a given semiconductor product * * * will often embody hundreds if not thousands of 'potentially patentable' technologies" (Bronwyn H. Hall & Rosemarie Ham Ziedonis, *The Patent Paradox Revisited: An Empiri-*

---

strategic exploitation of sunk costs and the threat of litigation would allow it to obtain unjustified, excessive royalty payments.

cal Study of Patenting in the U.S. Semiconductor Industry, 1979–1995, 32 RAND J. ECON., NO. 1, 101, 110 (2001)).

When a technology business is developing a new device or a new computer program, it often is extraordinarily difficult, notwithstanding the business's best efforts, to identify all of the existing patents and pending patent applications that may be relevant to each of the hundreds or even thousands of components that make up that new product. FTC REPORT, Ch. 2, at 28. In the computer hardware industry, for example, hundreds of thousands of patents are spread among tens of thousands of patentees. Hall & Ziedonis, *supra*, at 101, 110.

With this myriad of often-overlapping patents, no technology business can review every potentially relevant patent before designing and commercializing a new product. As a result, the firm may invest substantial time and resources in a new product ***before*** becoming aware that an arguably patented technology is embedded somewhere within its design. This is especially true because, in these rapidly changing fields, the grant of a patent may lag the introduction of a product by many years, and may not be brought to the attention of the industry until many years after that. Shapiro, *supra*, at 126 ("In these industries, the danger that a manufacturer will step on a land mine is all too real.").

If a hardware or software company becomes aware of the possibility of a patent infringement claim before it designs a new product, it has the choice of designing around the allegedly patented technology or obtaining a license to use it. At that point, the cost of a license would reflect the relative

difficulty of designing around the technology as well as the strength of the potential infringement claim.[8]

The situation becomes dramatically different from a business perspective when, as is often the case, an infringement claim is asserted ***after*** the company has already initiated production or invested substantial time and resources in research and development. At that point, backtracking to design around the now-integrated technology will almost certainly involve substantial expense, waste, and delay. Shapiro, *supra*, at 125-26; see also *KSR*, 127 S. Ct. at 1744 ("In automotive design, as in many other fields, the interaction of multiple components means that changing one component often requires the others to be modified as well.").

Indeed, "redesigning a product after significant costs have been sunk is usually not economically viable." FTC Report, Ch. 3, at 40. As a result, there will be overwhelming pressure on the company to obtain a license of the patent that allegedly is being infringed. The patent owner asserting infringement for that reason can demand a royalty that reflects the technology company's sunk costs—and the significant costs of defending against an infringement claim—not just the ordinary market value of the license. Adam B. Jaffe & Josh Lerner, INNOVATION AND ITS DISCONTENTS 112 (2004).

In this case, therefore, the royalty that Intel paid respondent likely is more indicative of the enormous costs that Intel had sunk into its chip architecture

[8] Of course, in many cases a technology company cannot design around a patent claim—such as when doing so would prevent the company from making new products compatible with existing ones, or with an industry standard that permits interaction with the products of other manufacturers.

than the actual inventive contributions of the patents that respondent had purchased. And the enhancing effect of those sunk costs on the value of respondent's infringement claim would be magnified exponentially, not diminished, if respondent were allowed to pursue its strategy of working its way down the manufacturing chain through to the ultimate users of every product that incorporates the infringing component.

Here, for example, the fact that petitioners' principal supplier, Intel, has now entered into a license agreement with respondent rather than designing its microprocessors to avoid respondent's patents, puts enormous pressure on petitioner to accede to a license. And the payment that could be exacted from petitioners would reflect not just the value of the invention, but their sunk costs in their own products and the impracticality of designing around Intel's components (including all of the technology that those components incorporate).

Indeed, at least one of the original defendants to this action (like petitioners, a manufacturer of components including Intel chips) who previously settled with respondent has entered into an arrangement with respondent that is substantially similar to that forced upon Intel. Amicus Dell Inc. has received a "notice letter" from that settling defendant that, like the letter that petitioners received from Intel (J.A. 143-44), states that the settling defendant has paid (another) royalty to respondent but warns that the "license" it obtained does not extend to subsequent purchasers of its components such as amici.[9]

In other words, if this Court upholds the court of appeals' revised exhaustion doctrine, amici Dell Inc.

[9] We have offered to lodge this letter with the Clerk.

and Hewlett-Packard Co. will find themselves bargaining with respondent over the third royalty payment on the same articles. The prior royalties paid by the defendants in this case and by Intel will provide no protection to amici—if Intel's license does not insulate petitioners against respondent's royalty claim, the "licenses" granted to entities in petitioners' position similarly will have no value for downstream firms such as amici. However, respondent's bargaining power with respect to amici will be enhanced because it will be able to leverage the costs that amici have sunk into designing products around Intel technology in general and the components manufactured by the defendants in this case in particular. The reality is that amici would be forced to pay a third duplicative royalty, not a fictional "fair proportional share" of the total royalty due to LGE.

Furthermore, there is no reason to think that this process would stop with amici. Under the Federal Circuit's opinion, respondent could require amici to accept a limited license and then proceed to extract another layer of royalties from retailers and end-users who purchase amici's computers. With appropriate contracting, and perhaps even without notice to consumers, the opinion below would allow respondent to extract an annual licensing fee on every computer with Intel microprocessors inside.

In short, the notion that underlies the Federal Circuit's doctrine of "intent based" patent exhaustion—that there will be a series of negotiations during which each entity that owns or uses the invention throughout the manufacturing process (and, thereafter, uses a "finished" product containing the invention) will pay its fair share of the royalty due to the patent owner—is simply false. Instead, the regime established by the Federal Circuit allows a

clever patent owner to extract substantially increased royalties each time that an article practicing its patent changes hands by exploiting the costs that downstream firms and users have sunk into the technology of their upstream suppliers.

2. The effect of the Federal Circuit's rule is even more draconian in the case of patents alleged to be infringed by products and services that comply with voluntarily-adopted industry standards—a claim that typically is not advanced until after the standard is adopted. *E.g.*, FTC REPORT, Ch. 2, at 22.[10] In that context, ***every entity that either produces an article in compliance with the standard or uses such an article*** would be obliged to pay royalties to avoid an infringement action, even if the initial manufacturer of the article had entered into a license agreement, as long as the patent owner imposed a condition on that agreement. The multiplication of infringement liability that would result is staggering.

And this phenomenon is certain to be exacerbated by the recent development of "[a]n industry * * * in which firms use patents not as a basis for

---

[10] These claims are asserted with considerable frequency. *E.g.*, Matt Hines, *Graphics Patent Suit Targets Dell, Others*, CNET News.com (Apr. 23, 2004) (available at http://tinyurl.com/ae73h) (describing a series of over 30 lawsuits claiming infringement for use of the JPEG digital image standard); Glen Fest, *Patently Unaware*, Bank Technology News, at 28 (April 2006) (available at http://tinyurl.com/yrxdhv) (describing over 70 infringement claims asserted against financial institutions for use of federally-mandated remote check imaging and processing technology); Peter Judge, *Wi-Fi world under threat from Symbol patent: Wireless vendor to seek license fees from all Wi-Fi equipment vendors*, Techworld.com (Sep. 23, 2004) (available at http://tinyurl.com/gjt2s) (describing company's claim that the Wi-Fi communication standard infringes its patent).

producing and selling goods but, instead, primarily for obtaining licensing fees." *eBay Inc.* v. *MercExchange, L.L.C.*, 126 S. Ct. 1837, 1842 (2006) (Kennedy, J., concurring); see also FTC REPORT, Ch. 2, at 31 (discussing significant growth of "patent litigation firms," entities that "buy patents from other companies (particularly bankrupt ones) not to practice but to assert against others" in infringement actions). "For these firms, [typical patent remedies] can be employed as a bargaining tool to charge exorbitant fees to companies that seek to buy licenses to practice the patent." *Ibid.*[11]

3. It is no answer that a manufacturer can choose to contest the patent claim rather than pay the royalty. Patent infringement claims are easy to assert, but difficult to disprove. Especially in the technology context, the validity of a patent—as well as its legitimate boundaries—sometimes may be difficult to determine, which allows the assertion of extremely tenuous claims. *E.g.*, James Bessen & Michael J. Meurer, *Lessons for Patent Policy from Empirical Research on Patent Litigation*, 9 LEWIS & CLARK L. REV. 1, 16 (2005) ("[C]ourt errors are difficult to avoid in patent litigation, because claim interpretation is complex and it is difficult for fact-finders to assess evidence of infringement. Thus, a deserving defendant may face a significant risk of liability.").

Moreover, patent-infringement litigation is unusually expensive. According to a recent survey, the cost of litigating a patent-infringement case with less than $1 million at risk was approximately $350,000

[11] Patent litigation firms typically do not assert infringement claims until the target of the claim has brought a product to market so that they can maximize the value of the infringement claim. Mark A. Lemley & Kimberly A. Moore, *Ending Abuse of Patent Continuations*, 84 B.U. L. REV. 63, 69 (2004).

through discovery and $600,000 through trial and appeal; the median cost of participating in a case involving between $1 million and $25 million at risk was approximately $1.25 million through discovery and $2.5 million through trial and appeal. When more than $25 million is at risk, the median cost was approximately $3 million through discovery and $5 million through trial and appeal. Am. Intellectual Prop. Law Ass'n, REPORT OF THE ECONOMIC SURVEY 25 (2007).

Aside from the substantial litigation costs, the magnitude and unpredictability of a potential judgment makes the trial of an infringement case a daunting prospect. Since 2000, the median amount of damages awarded in patent cases following a bench trial has been $1.9 million. See PriceWaterhouseCoopers, 2006 PATENT AND TRADEMARK DAMAGES STUDY 3. Trial before a jury is even riskier: during the same period, the median jury award was $8 million—more than four times the median bench award. Of course, the costs of litigation will appear even more prohibitive when the target of an infringement claim has purchased the article in question from a firm that already has paid the patent holder a royalty, which may be interpreted as conceding that its product infringes the patent.

These outcomes are not sensible patent policy. This Court always has been clear that "the promotion of the progress of science and the useful arts is the 'main object' [of the patent system]; reward of inventors is secondary and merely a means to that end." *Masonite*, 316 U.S. at 278 (quoting *Pennock* v. *Dialogue*, 27 U.S. (2 Pet.) 1, 19 (1829) (citations omitted)). Allowing the patent owner to multiply its recovery by extracting a new, duplicative royalty at each stage of ownership—based not on the value of

the invention but on the target's sunk costs and prospective litigation expenses—does not promote the progress of science and the useful arts and thus does not serve the purposes of the patent system.

Rather, the only "benefit" of the Federal Circuit's regime is to enhance patent owners' ability to exploit the threat of litigation and other transaction costs to obtain excessive royalties. Justice Kennedy recognized this threat in his concurring opinion in *eBay*, observing that legal rules often "can be employed as a bargaining tool to charge exorbitant fees to companies that seek to buy licenses to practice the patent." 126 S. Ct. at 1842. The sole effect of the novel legal rule adopted by the Federal Circuit is to facilitate that illegitimate conduct.

This Court should reaffirm its settled patent exhaustion jurisprudence and thereby preclude the revision of patent law to impose what amounts to a technology tax at every level of the manufacturing process.

C. Patent Owners Can Enforce Conditions On A Sale Through Contract Law, And Should Not Be Given The Added Coercive Power Of Patent Law.

The patent exhaustion doctrine does not restrict a patent owner's ability to contract. Patent owners remain free to place conditions on the sale of patented articles, but those conditions "must stand on the same footing * * * as like stipulations with respect to unpatented commodities." *Univis Lens*, 316 U.S. at 251; see also *Keeler*, 157 U.S. at 666 (whether a patent owner can impose conditions on the post-sale use and enjoyment of a patented article is "a question of contract, and not [a question] under the inherent meaning and effect of the patent laws"). The

distinction between enforcing a condition under contract law and patent law is not a mere formality; it has significant legal consequences and for this reason as well the Federal Circuit erred by transforming the exhaustion doctrine into a rule of contract interpretation.

First, patent law would allow the patent owner to enforce conditions such as those asserted by respondent in the absence of contractual privity. The patent owner could prevent downstream owners from using the article even though it was not in privity with those owners. As petitioners note (Pet. Br. 46-49), the Federal Circuit has authorized a generally prohibited form of property: servitudes that run with chattels. That confers an enormous new benefit on patent owners. We already have discussed (at 14-19) that by bringing separate infringement actions against each successive owner in a manufacturing chain, a patent owner can expand significantly the power of its patent—a strategy that would allow it to extract a greater total royalty than it otherwise could and at the same time impede the progress of the useful arts.

Second, recourse to the patent laws allows a patent owner to invoke the significant threat of an injunction when enforcing a downstream condition. See 35 U.S.C. § 283. As Justice Kennedy recently stated, "an injunction, and the potentially serious sanctions arising from its violation, can be employed as a bargaining tool to charge exorbitant fees to companies that seek to buy licenses to practice the patent." *eBay*, 126 S. Ct. at 1842 (Kennedy, J., concurring). Particularly when, as here, "the patented invention is but a small component of the product the companies seek to produce," the threat of an injunction that

affects the entire product can create "undue leverage in negotiations." *Ibid.*

Third, enforcement of a condition under the patent laws carries the threat of increased damages and attorneys' fees if there is a finding of willful infringement. See 35 U.S.C. §§ 284 & 285. The practical risk of such a finding could well be greater in situations in which an upstream owner of the article already has paid the patent owner a royalty, which may be interpreted as conceding that its product infringes the patent. A downstream owner might worry that the fact-finder in an infringement action would be influenced by the existence of the upstream licensing agreement, concluding that the downstream user had clear notice of infringement. The leverage that this concern gives to the patent owner will only increase as it works its way down the manufacturing and distribution chains, acquiring more license agreements.

Fourth, by allowing the patent owner to impose downstream conditions under the protection of the patent law, the Federal Circuit's rule may authorize anticompetitive conduct that otherwise would be prohibited by the antitrust laws. As the Solicitor General pointed out, "[t]he Federal Circuit's approach also has the potential to erode downstream competition by permitting patentees to avoid antitrust scrutiny of restrictions on the use and resale of products embodying their inventions." U.S. Cert. Am Br. 18.

There is no reason that patent owners should be afforded these excess abilities, over and above those available to every other contracting party, when enforcing a downstream condition on the sale of an article.

II. THERE IS NO EXCEPTION TO THE EXHAUSTION DOCTRINE FOR METHOD CLAIMS ASSOCIATED WITH A PATENTED ARTICLE.

Patents may include "apparatus" claims, that describe the technical components necessary to create certain functionality, and "method" claims, that describe the use of those components to achieve that functionality. "It is commonplace that the claims defining some inventions can by competent draftsmanship be directed to either a method or an apparatus." *Bandag, Inc.* v. *Al Bolser's Tire Stores, Inc.*, 750 F.2d 903, 922 (Fed. Cir. 1984). Respondent's patents contain both apparatus and method claims.

The Federal Circuit erroneously held that none of respondent's claims, apparatus or method, were exhausted here because the sales of the patented articles were conditional. But the court's statement that the sale of a patented article can *never* exhaust a method claim in the patent relating to that article (Pet. App. 6a) is just as inconsistent with this Court's jurisprudence and would have the very same adverse practical effects. It therefore should be explicitly rejected by this Court.

Under the Federal Circuit's rule, every patentee could entirely avoid the patent exhaustion doctrine simply by adding to the patent application a method claim describing the intended use of the article described in the apparatus claim. The patent owner could then pursue the multiple-royalty-extraction strategy described above by selling the patented article—obtaining a royalty payment from the first purchaser (or the licensed manufacturer)—and then requiring subsequent purchasers of the patented article to obtain a license for practicing the method claim. (Although the first sale might exhaust the ap-

paratus claim, it could never—according to the Federal Circuit—exhaust the method claim.) The patent owner thus would be able to obtain a second, third, and forth royalty for the very same inventive contribution. That strategy would create the same unjustified transaction costs as the Federal Circuit's eviscerated patent exhaustion doctrine and, like the Federal Circuit's regime, would serve no purpose under the patent laws.

To prevent this absurd result, the Court should adopt the common-sense rule that the exhaustion of an apparatus claim upon the first authorized sale of a patented article also exhausts any method claim that describes the intended use and enjoyment of that apparatus claim.[12] That rule, consistent with this Court's patent exhaustion jurisprudence, would

[12] The decisions cited by the Federal Circuit to support its categorical exclusion of all method claims from the exhaustion doctrine in fact are more consistent with the rule that we propose. In one case, the plaintiff owned a patent that described a method of refinishing tires but had no apparatus claims related to the equipment used to carry out that method. *Bandag*, 750 F.2d at 923-24. Accordingly, the method claim represented an independent inventive contribution for which the plaintiff had not yet received its full royalty (it did not simply describe the intended use and enjoyment of an exhausted apparatus claim). In the other case, the plaintiff owned a patent that covered certain window components and a patent that covered a method for turning window components into a finished window. *Glass Equip. Dev., Inc.* v. *Besten, Inc.*, 174 F.3d 1337, 1339-40 (Fed. Cir. 1999). For years, the infringing party purchased the plaintiff's components and used them to create finished windows through a ***non-infringing*** method. *Ibid.* In other words, the plaintiff's method claim did not simply describe the intended use and enjoyment of the exhausted apparatus claims in its window components; it described a novel and independently inventive method of creating a window (entitling the patentee to a second royalty for that separate inventive contribution).

ensure that patent owners receive a fair royalty for their inventive contribution (but not a duplicative royalty for the same invention under different claim categories) while providing simplicity to the patent system and certainty for owners of patented articles.

CONCLUSION

The judgment of the court of appeals should be reversed.

Respectfully submitted.

ANDREW J. PINCUS
Counsel of Record
CARL J. SUMMERS
Mayer Brown LLP
1909 K Street, NW
Washington, DC 20006
(202) 263-3000

Counsel for Amicus Curiae Dell Inc.

NOVEMBER 2007

No. 06-937

In The
Supreme Court of the United States

QUANTA COMPUTER, INC., *et al.*,

Petitioners

v.

LG ELECTRONICS, INC.

On Writ Of Certiorari
To The United States Court Of Appeals
For The Federal Circuit

BRIEF FOR GEN-PROBE INCORPORATED AS *AMICUS CURIAE* IN SUPPORT OF PETITIONERS

DAVID C. DOYLE
MORRISON & FOERSTER LLP
12531 High Bluff Dr.,
Suite 100
San Diego, CA 92130

BETH S. BRINKMANN
Counsel of Record
KETANJI BROWN JACKSON
BRIAN R. MATSUI
MORRISON & FOERSTER LLP
2000 Pennsylvania Ave., NW
Washington, DC 20006
(202) 887-1544

NOVEMBER 13, 2007

COCKLE LAW BRIEF PRINTING CO. (800) 225-6964
OR CALL COLLECT (402) 342-2831

TABLE OF CONTENTS

Page

INTEREST OF *AMICUS CURIAE* 1

INTRODUCTION AND SUMMARY OF ARGUMENT 3

ARGUMENT 7

THE FEDERAL CIRCUIT'S DISREGARD OF THIS COURT'S WELL-ESTABLISHED PATENT EXHAUSTION DOCTRINE STIFLES INNOVATION, DISTORTS SETTLED PATENT PRINCIPLES THAT UNDERGIRD THE BIOTECHNOLOGY SECTOR, AND LEADS TO UNTENABLE RESULTS 7

A. The Biotechnology Industry Relies Upon Strategic Alliances And Commercial Relationships That Will Be Disrupted If The Ruling Below Is Not Reversed 10

B. This Court's Patent Exhaustion Doctrine Reflects Well-Settled Legal Rules Regarding The Transfer Of Property Interests, And It Reaffirms That Limits On Patent Monopolies Are Essential To Fairness And Advancements In Technological Markets 12

1. The authorized sale of a patented item transfers title and exhausts any patent rights with regard to that item 12

2. Conditions on the use of a patented article after sale are a matter of contract and have no bearing on whether a patent is exhausted 14

TABLE OF CONTENTS – Continued

Page

3. The ruling below would lead to outcomes that are contrary to well-established market norms 17

C. The Federal Circuit Disregards Core Patent Exhaustion Principles, And Its Analysis Has So Upset Settled Expectations That It Portends Unfair, Unwarranted, And Untenable Results 20

1. The Federal Circuit's "conditional sale" analysis is wrong 20

2. The Federal Circuit's patent exhaustion ruling puts technological advancements in the biotechnology area at risk 23

CONCLUSION 28

TABLE OF AUTHORITIES

Page

CASES

Adams v. Burke, 84 U.S. (17 Wall.) 453 (1873) ....*passim*

B. Braun Medical, Inc. v. Abbott Laboratories., 124 F.3d 1419 (Fed. Cir. 1997) 14

Bloomer v. McQuewan, 55 U.S. (14 How.) 539 (1852) ....*passim*

Henry v. A.B. Dick Co., 224 U.S. 1 (1912) 22

Keeler v. Standard Folding-Bed Co., 157 U.S. 659 (1895) 15, 16, 17

Kewanee Oil Co. v. Bicron Corp., 416 U.S. 470 (1974) 10

Mallinckrodt, Inc. v. Medipart, Inc., 976 F.2d 700 (Fed. Cir. 1992) 20, 21

Mitchell v. Hawley, 83 U.S. (16 Wall.) 544 (1872) 13, 14, 15, 22

Motion Picture Patents Co. v. Universal Film Manufacturing Co., 243 U.S. 502 (1917) 12, 16, 19, 22

United States v. General Electric Co., 272 U.S. 476 (1926) 12

United States v. Univis Lens Co., 316 U.S. 241 (1942) 12, 13, 14, 15, 18

TABLE OF AUTHORITIES – Continued

Page

MISCELLANEOUS

Donald S. Chisum, *Chisum on Patents* 7

Julie E. Cohen & Mark A. Lemley, *Patent Scope and Innovation In the Software Industry,* 89 CAL. L. REV. 1 (2001) 21

NIH: Moving Research from the Bench to the Bedside: Hearing Before the Subcomm. on Health of the House Comm. on Energy and Commerce, 108th Cong. 47 (2003) 10

Richard H. Stern, *The Unobserved Demise of the Exhaustion Doctrine in US Patent Law*, 15 EUR. INTEL. PROP. REV. 460 (1993) 16

INTEREST OF *AMICUS CURIAE*[1]

Amicus curiae Gen-Probe Incorporated is a global leader in the biotechnology industry. It has developed, manufactured, and marketed rapid, accurate, and cost-effective nucleic acid probe-based products that are used for the clinical diagnosis of human diseases and to screen donated human blood. For a quarter of a century, Gen-Probe also has developed and manufactured nucleic acid probe-based products for the detection of harmful organisms in the environment and in industrial processes. Gen-Probe's products are based on its patented technology for nucleic acid testing. Such products are used daily in clinical laboratories and blood collection centers in countries throughout the world. Gen-Probe holds more than 200 patents in these vital fields.

Much of Gen-Probe's success is achieved through strategic alliances, collaborations, and other commercial relationships with other companies in the biotechnology industry. These commercial relationships help to develop products that, among other things, will assist in blood screening, diagnosing prostate cancer, detecting human papillomavirus, and improving food safety. Gen-Probe has a significant interest in the

---

[1] Letters from all parties indicating that they have provided a blanket consent to the filing of *amicus curiae* briefs in this case have been filed with the Clerk of this Court pursuant to Supreme Court Rule 37.3(a). No counsel for a party authored this brief in whole or in part and no party or counsel for a party made a monetary contribution intended to fund the preparation or submission of the brief. No person other than *amicus curiae*, their members, or their counsel made a monetary contribution to the preparation or submission of this brief.

instant case because many of Gen-Probe's research and development projects depend upon the purchase of patented articles and the licensing of patented technologies. Like other biotechnology firms, Gen-Probe relies on the expectation that a sale by a patent holder, or an authorized sale by a licensee, of products that incorporate those patented articles and technologies cannot give rise to patent liability on the part of the purchasers.

The decision below creates doubt where there must be none. The Federal Circuit's ruling permits a patent holder to resurrect patent rights on articles already sold in commerce. This creates uncertainty as to when, and under what circumstances, a patent holder has retained or forfeited its patent rights following its licensing of a patented technology or its sale of patented products, and it exposes those who purchase articles from the patent holder or its authorized licensee to potential patent infringement liability in circumstances never before contemplated by this Court.

This uncertainty has grave implications for the Nation's economy, which is increasingly dependent on scientific progress, as encouraged and protected by our patent system. In the area of biotechnology, the decision below will have a particularly profound effect because it often takes years, and millions of dollars of capital investment, before the commercial products that incorporate the patented articles (which include *amicus curiae*'s life-saving diagnoses and detection devices) become marketable. If companies, or their investors, fear that marketable biotechnology products will be prone to patent infringement suits by patent

holders, even though patented components have been purchased from a licensed seller and even after the company's products have been sold to their customers or their customers' customers, then biotechnology innovation will suffer.

INTRODUCTION AND SUMMARY OF ARGUMENT

This case can be distilled down to two basic principles.

First, if a patent holder *sells* a patented article but wants to restrict what the purchaser does with that article after the sale, *e.g.*, to prohibit resale or to restrict the manner of use, the patent holder must make and enforce any such restrictions pursuant to a *contract*. The patent holder cannot enforce such restrictions under *patent* law, because the patent monopoly terminates upon the sale of the patented product to the purchaser, who obtains title to the property through the sale and passes such title on to any subsequent purchasers. This is known as "patent exhaustion" or the "first sale" doctrine.

Second, the result is no different if the seller is a *licensee* of the patent holder because a patent licensee acting within the scope of its license stands in the shoes of the patent holder when selling patented products. As such, when a licensee acting within the scope of its license sells an article that incorporates patented technology, it, too, cannot impose restrictions upon purchasers that are enforceable under *patent* law regarding the use or resale of that article.

The ruling of the Federal Circuit ignores these basic principles. It permits a patent holder (respondent,

here) to maintain a patent infringement action against the purchasers (petitioners) of an article containing patented technology from a licensee acting within the scope of its license (Intel), thereby allowing the patent holder to evade patent exhaustion. It confers onto a patent holder the right to impose, through its licensee, restrictions on purchasers of articles incorporating patented technology that are enforceable under patent law and that will follow that article whenever it is used or resold.

A. The ruling below threatens innovation in technology dependent industries such as biotechnology. This is because the products typically each incorporate numerous patented technologies, and biotechnology companies and their customers must rely upon patent exhaustion to preclude patent infringement actions after they have bought, through an authorized sale, an article containing a patented technology. Knowledge that a final commercial product will not be subject after sale to subsequent patent infringement suits by patent holders supports the incentive for biotechnology companies to make the enormous investments of time and capital necessary to the development of new drug therapies and products.

The Federal Circuit's exhaustion ruling ignores the purposes of the Patent Act. It departs from this Court's firmly established precedent and authorizes a result that is in many ways unimaginable: that a patent holder who voluntarily sells (or authorizes the sale of) a patented article can resurrect its patent rights with respect to that article and extract

additional sums from far-removed subsequent purchasers by invoking patent law.

B. For more than a century, the Court has held that a purchaser of a patented article sold by a patent holder (or by its licensee) receives complete title to that article and the patent holder's right to exclude others from using that particular article is "exhausted." The Court has recognized that the property interest of the purchaser outweighs the patent holder's right to exclusive use. And because such an article has passed outside "the limits of the monopoly," *Bloomer v. McQuewan*, 55 U.S. (14 How.) 539, 549 (1852), the Court has rejected attempts by the patent holder to enforce against purchasers any restrictions on the use of the patented article through infringement suits under *patent* law (such patent holder may nonetheless have a right to sue under a contract).

This is as it should be. By preventing patent holders from pursuing infringement actions against downstream purchasers, but also allowing patent holders to recover damages under contract law if such purchasers fail to proceed in accordance with a contractual restriction on use of the article after sale, the law reflects the realities of the marketplace. Patent exhaustion also promotes fairness in transactions involving patented goods and fosters stability, growth and development in technological industries.

C. The Federal Circuit's ruling casts doubt upon and undermines this well-settled patent exhaustion doctrine. Rather than acknowledging that an authorized sale creates a property right in the purchaser that, of necessity, trumps the patent holder's

right to exclude under patent law, the court below held that a patent holder can sell patented technology and also retain its monopoly rights with respect to the article sold simply by imposing use restrictions at the time of sale. This conclusion demonstrates a fundamental misperception of the patent exhaustion rule and the property-based and contract-based interests that it protects.

The Federal Circuit's "conditional sale" (*non*exhaustion) rule muddies the waters regarding the circumstances under which a company can acquire or confer "freedom to operate," *i.e.*, the ability to research, develop, and bring to market life-saving products without concerns about patent infringement. In order to function effectively, the biotechnology industry needs clear legal rules and guidance to ensure that a patent holder receives from its licensees its full royalty for their right to manufacture, use, and sell the patented article (which often costs hundreds of millions of dollars to create), and also that purchasers of the products sold by the patent holder or its authorized licensee can use those products (and invest hundreds of millions of dollars to create other products incorporating them) without being subject to patent infringement suits.

Without patent peace, the operation of the biotechnology sector would be profoundly disrupted. The funds needed to support the research and development of marketable products in this industry are substantial, and the instability caused by the Federal Circuit's application of distorted exhaustion principles could affect innovation and investment for years to come. Moreover, under a legal system in

which a patent holder can seek to extract additional royalties under patent law from a company or its customers for a product that took many years, and hundreds of millions of dollars, to develop, patent holders would have extraordinary, market-distorting power. Research and development ventures could also become so risky that production of biotechnology products would be jeopardized. At the very least, this Court should avoid the untenable result of a patent system in which a patent holder is free to bring an infringement suit against downstream purchasers even if those purchasers are complying with the patent holder's use restrictions.

ARGUMENT

THE FEDERAL CIRCUIT'S DISREGARD OF THIS COURT'S WELL-ESTABLISHED PATENT EXHAUSTION DOCTRINE STIFLES INNOVATION, DISTORTS SETTLED PATENT PRINCIPLES THAT UNDERGIRD THE BIOTECHNOLOGY SECTOR, AND LEADS TO UNTENABLE RESULTS

The "patent exhaustion" doctrine, also known as the "first sale" doctrine, provides a defense against a claim of patent infringement where the patent holder sold the patented article in question, or the patented product was sold with the patent holder's authorization, for example, by a licensee. *Adams v. Burke*, 84 U.S. (17 Wall.) 453, 456 (1873) ("[W]hen the patentee, or the person having his rights, sells a machine or instrument whose sole value is in its use, he receives the consideration for its use and he parts with the right to restrict that use."); Donald S. Chisum, *Chisum on Patents* § 16.03[2][a] ("[A]n

authorized sale of a patented product exhausts the patent monopoly as to that product."). This bedrock principle of patent law strikes an important balance between, on the one hand, the interest of a patent holder in recouping his investment and generating profits through sales, and on the other hand, the interests of the public in the free use and movement in the marketplace of products after a patent holder has reaped its economic benefit through its sale (or its licensee's authorized sale) of the patented product.

The Federal Circuit has upset this equilibrium. In the instant case, respondent LG Electronics, Inc. owns several patents related to microprocessors and chipsets, which it licensed to the Intel Corporation. That license gave Intel the right to make, use, and sell, without infringement liability, certain microprocessors and chipsets that incorporate LG Electronics's patented technology. Pet. App. 33a. Pursuant to this license, Intel sold to petitioners (and others) chipsets that incorporated that patented technology, Pet. App. 29a-30a, and those chipsets were then installed in desktop and laptop computers sold throughout the United States and the world, Pet. Br. 3. Although Intel's license with LG Electronics did not limit or otherwise affect patent exhaustion, it purported to disclaim conferring any express or implied license in its patents to any computer manufacturers, *e.g.*, petitioner Quanta Computers, who might purchase Intel products and then manufacture computers by combining those products (which incorporated LG Electronics's patented technology) with non-Intel products.

Under a straightforward application of this Court's patent exhaustion doctrine, however, LG Electronics could not retain any patent rights to bring infringement actions against manufacturers that had purchased Intel's chipsets. That is because the authorized sale to the manufacturers by Intel, as a licensee of LG Electronics, of the products that incorporated LG Electronics's patented technology transferred title in the products to the purchasers who could then use the products as they liked. The sale thereby exhausted LG Electronics's *patent* rights to exclude the customers' use of the patented technology in the products sold; in order to restrict the use by such purchasers, the patent holder must rely on a contractual agreement.

But the Federal Circuit disagreed, holding that LG Electronics's license to Intel and Intel's sales to petitioners were "conditional," and therefore LG Electronics's patent rights were not exhausted, so that LG Electronics could bring an infringement action against those who had bought chipsets from Intel that incorporated the patented technology. That incorrect ruling has far-reaching consequences because it resurrects respondent's patent rights and allows it to recover again for patent rights for which it has already been fully compensated.

A. The Biotechnology Industry Relies Upon Strategic Alliances And Commercial Relationships That Will Be Disrupted If The Ruling Below Is Not Reversed

Patents are vital to biotechnology companies such as *amicus curiae*. Few sectors of the United States economy are as dependent upon patents as the biotechnology industry. Companies such as *amicus* Gen-Probe frequently expend hundreds of millions of dollars, over the course of a decade or more, for development of medical devices *before* the first dollar of revenue is realized. *See NIH: Moving Research from the Bench to the Bedside: Hearing Before the Subcomm. on Health of the House Comm. on Energy and Commerce*, 108th Cong. 47 (2003) (testimony of Phylliss Gardner, M.D.). ("The biotechnology industry is the most research and development-intensive and capital-focused industry in the world.").

The enormous capital investments that support this development are attracted only by clear evidence of patent protection so that biotechnology companies can ensure that the investment, and their corresponding advancements, is not for naught during the lengthy development, approval, and marketing process for their inventions. *Kewanee Oil Co. v. Bicron Corp.*, 416 U.S. 470, 480 (1974) (patent laws "promote * * * progress by offering a right of exclusion for a limited period as an incentive to inventors to risk the often enormous costs in terms of time, research, and development").

The days of a single patent covering a world-altering invention are over, however, even in the biotechnology industry. Commercial products in the biotechnology

industry such as new screening methods, drugs, and therapies for life threatening disease often embody *multiple* patented inventions. This is so because no single biotechnology company holds patents to all of the necessary components that are used to comprise or create the final commercially available product. As such, those companies, including *amicus* Gen-Probe, must negotiate appropriate arrangements with those who hold patents for various components or intermediate products. *See, e.g.*, Gen-Probe, Corporate Collaborations and Strategic Alliances, *available at* http://www.gen-probe.com/corp_overview/collab.htm (last visited Nov. 11, 2007) (describing collaborations and strategic alliances to help diagnose and detect cancers and other serious diseases). Gen-Probe must either obtain a license or purchase such components from a licensed seller in order to have "freedom to operate," which enables it to research, develop, and bring to market life-saving products without infringement fears.

The decision below will have significant, adverse ramifications in such circumstances. The ability to use properly patented technology as the building blocks for the next test, therapy, or cure for debilitating or life-threatening diseases would be compromised if companies face threats of patent infringement suits long after the purchase of patented articles and the investment of hundreds of millions of dollars into products based on those articles.

B. This Court's Patent Exhaustion Doctrine Reflects Well-Settled Legal Rules Regarding The Transfer Of Property Interests, And It Reaffirms That Limits On Patent Monopolies Are Essential To Fairness And Advancements In Technological Markets

1. The authorized sale of a patented item transfers title and exhausts any patent rights with regard to that item

The patent exhaustion principle that an authorized sale of a patented article prevents the patent holder from suing that purchaser, or any subsequent purchasers, for patent infringement has long guided this Court's patent jurisprudence. *See Adams*, 84 U.S. (17 Wall.) at 456 (limiting patent rights when a patented invention is sold is "[i]n the essential nature of things"); *accord United States v. Univis Lens Co.*, 316 U.S. 241, 250-51 (1942); *see also United States v. General Elec. Co.*, 272 U.S. 476, 489 (1926) (after an authorized sale a patent holder "can exercise no future control over what the purchaser may wish to do with the article after his purchase" because "[i]t has passed beyond the scope of the patentee's rights."); *Motion Picture Patents Co. v. Universal Film Mfg. Co.*, 243 U.S. 502, 516 (1917) (when a patent holder sells or authorizes the sale of a patented invention, "the article sold [is] thereby carried outside the monopoly of the patent law and rendered free of every restriction" on use that the patent holder might otherwise have sought to enforce as a matter of patent law). It finds roots in a fundamental legal principle that this Court first articulated in *Bloomer v. McQuewan*, 55 U.S. (14

How.) 539 (1852); namely, that the conveyance of a patented invention itself (through sale) for use by the purchaser, as opposed to the mere license to make, use, or sell the patented invention, allows the purchaser to use the property it bought as it sees fit.

In *Bloomer*, this Court explained that the bundle of rights belonging to a patent holder under patent law "consists altogether in the right to exclude every one from making, using, or vending the thing patented." *Id.* at 549; *accord Univis Lens*, 316 U.S. at 250. In a license agreement, the patent holder sells only the "privilege of making or vending" the invention, *i.e.*, the licensee "obtains a share in the [patent] monopoly, and that monopoly is derived from, and exercised under, the protection of the United States." *Bloomer*, 55 U.S. (14 How.) at 549; *see also Mitchell v. Hawley*, 83 U.S. (16 Wall.) 544, 548 (1872) (licensees "hold the whole or a portion of the franchise which the patent secures").

But one who *buys* the patented invention itself "stands on different ground" from a licensee. A purchaser of a patented item does not exercise "rights created by the act of Congress, nor does he derive title to [the invention] by virtue of the franchise or exclusive privilege granted to the patentee." *Bloomer*, 55 U.S. (14 How.) at 549. Rather, the invention that he purchased "becomes his private, individual property" to do with as he wishes (or as he may have contracted to do) without regard to the limitations on use that patent law imposed before the sale. *Id.* at 550. In other words, "when the machine passes to the hands of the purchaser, it is no longer within the limits of the monopoly" but "passes outside of it, and

is no longer under the protection of the act of Congress." *Id.* at 549; *see also Mitchell*, 83 U.S. (16 Wall.) at 548 (in contrast to a licensee, a purchaser "acquires no portion of the franchise" and "the machine, which rightfully passes from the patentee to the purchaser, ceases to be within the limits of the monopoly").[2]

2. Conditions on the use of a patented article after sale are a matter of contract and have no bearing on whether a patent is exhausted

In the instant dispute, the Federal Circuit concluded that patent exhaustion "'does not apply to an expressly conditional sale or license.'" Pet. App. 6a (quoting *B. Braun Med., Inc. v. Abbott Labs.*, 124 F.3d 1419, 1426 (Fed. Cir. 1997)). It thereby erroneously conflated a sale with a license. *See* Pet. App. 5a ("There are two sales at issue here. First, * * * LGE granted Intel a license * * *. Second, with LGE's authorization, Intel sold its microprocessors and chipsets * * * .").

But this Court has clearly distinguished between sales and licenses. In contrast to licenses, sales create *ownership* rights in the thing transferred, *Univis Lens*, 316 U.S. at 252 (a sale is "the vehicle for transferring to the buyer ownership of the invention with respect to that article"), and a necessary concomitant of that ownership is the right to use

---

[2] This is so even if the sale was not by the patent holder himself, so long as the seller is authorized to sell the patented invention. *Adams*, 84 U.S. (17 Wall.) at 456.

what has been purchased in whatever manner the owner wishes, *Adams*, 84 U.S. (17 Wall.) at 455 ("[T]he sale by a person who has the full right to make, sell, and use such a machine carries with it the right to the use of that machine to the full extent to which it can be used"); *see also Univis Lens*, 316 U.S. at 249 ("[a]n incident to the purchase of any article * * * is the right to use and sell it").

This Court has repeatedly held that the transfer of a patented invention by a sale *creates property interests in the purchaser*—including the right to freely use the invention—and that it simultaneously extinguishes the patent holder's right to exclusivity under patent law with respect to the use of that particular item sold. *See ibid.*; *Keeler v. Standard Folding-Bed Co.*, 157 U.S. 659, 666 (1895) ("[O]ne who buys patented articles of manufacture from one authorized to sell them becomes possessed of an absolute property in such articles, unrestricted in time or place."); *Mitchell*, 83 U.S. (16 Wall.) at 548 ("Complete title to the implement or machine purchased becomes vested in the vendee by the sale and purchase.").

This Court's decisions thus balance the rights and interests conveyed under the common law of property and those that are protected by the statutory right of patent. These decisions recognize a straightforward legal principle: that a purchaser's right to use a purchased invention in whatever manner it pleases and a patentee's right to prevent such use are, by necessity, mutually exclusive. Consequently, the authorized sale of a patented invention *necessarily* divests the patent holder of

his monopoly with respect to use of the article sold. *See* Richard H. Stern, *The Unobserved Demise of the Exhaustion Doctrine in US Patent Law*, 15 EUR. INTEL. PROP. REV. 460, 462 (1993) (the patent exhaustion doctrine is "based on property law, which the Court considered to supervene over patent law once the patentee sold the patented article to the customer-owner").

Significantly, because one who purchases a patented article receives the right to use that article "to the full extent to which it can be used" as a result of possessing its title, *Adams*, 84 U.S. (17 Wall.) at 455, any restrictions that the seller wishes to impose on a purchaser's use of the article can be obtained by the seller *only through a contract* that is evaluated and enforced as a matter of *contract* law. It is for that reason that this Court in *Motion Picture Patents* refused to authorize the enforcement under patent law of use restrictions against purchasers and expressly distinguished between "the rights which are given to the inventor by the patent law and which he may assert against all the world through an infringement proceeding," and the "rights which [the inventor] may create for himself by private contract." 243 U.S. at 514. In *Keeler*, too, this Court found that the sale exhausted the patent holder's *patent* rights, while expressing no opinion as to "[w]hether a patentee may protect himself and his assignees by special contracts brought home to purchasers," which, it noted, was an issue that "would arise as a question of contract, and not as one under the inherent meaning and effect of the patent laws." 157 U.S. at 666; *see also Bloomer*, 55 U.S. (14 How.) at 550

(contracts in relation to sold goods "are regulated by the laws of the State," not patent law).

3. The ruling below would lead to outcomes that are contrary to well-established market norms

The Federal Circuit's view that the patent exhaustion doctrine does not apply to a sale where the seller intends to restrict use of the patented article after sale not only ignores this Court's precedents but would lead to nonsensical and economically disadvantageous results.

For example, the decision below could be misinterpreted to leave the purchaser of a patented product that is subject to use restrictions open to a suit for patent infringement *without regard* to whether such purchaser complies with the restrictions. For if the exhaustion doctrine truly "does not apply to an expressly conditional sale,"[3] then *no one* who purchases a restricted item is immune from liability for patent infringement, even by complying with the restriction.

Under this Court's precedents, however, patent exhaustion does, in fact, occur upon a restricted sale, leaving the purchaser who violates the restriction exposed only to contract liability. *Keeler*, 157 U.S. at 661. Indeed, this Court's consistent recognition that

---

[3] The Federal Circuit interprets the term "conditional sale" to be synonymous with a restricted sale. But petitioners have shown that that interpretation of "conditional sale" finds no support in this Court's patent exhaustion precedents. Pet. Br. 19-20.

an authorized sale extinguishes the monopoly of patent is crucial if patented articles are to be marketed, and the marketing of such articles is, in turn, a prerequisite for technological advancement. When a product that is patented (or that is comprised of patented components) is sold, it is released into the stream of commerce just like any other good. For the market to react properly—*i.e.*, for that product to retain its value—the patent holder's right to exclude others from using the patented product or component cannot persist.

Respondent suggests that a patent holder may somehow sell a patented article so that the sale merely reallocates to the purchaser some portion of the patent holder's exclusive authority under the patent laws with respect to that article, depending upon the amount that is paid. Resp. Br. in Opp. at 25 ("whether the authorizations are partial or complete" affects the price). But one who *sells* a patented item is not "parceling out" his exclusivity rights in a manner that preserves his rights under the Patent Act or his entitlement to extract usage fees from successive downstream purchasers under free market principles. Resp. Br. in Opp. at 25. With respect to such purchasers, the right to use derives from purchase of the title itself, not from any authority granted to, or by, the patent holder; consequently, the price paid is not "partial" in any respect. *See Bloomer*, 55 U.S. (14 How.) at 550 (what a buyer is willing to pay for a product is based on "the usefulness of the thing he buys, and the advantages he will derive from its use"); *see also Univis Lens*, 316 U.S. at 252 (the purchase price reflects "every benefit of th[e]

monopoly which the patent law secures" with respect to the item sold); *Adams*, 84 U.S. (17 Wall.) at 456 (in "the act of sale" the patentee or assignee "receive[s] all the royalty or consideration which he claims for the use of his invention in that particular machine or instrument").

Of course, if a patent holder markets an invention that is saddled with restrictions on the use to which the invention can be put after sale, the sales price will reflect that restriction. But neither free market principles nor this Court's patent precedents permit what the Federal Circuit authorized here: the potential recovery of the "full" value of that restricted item through an action for infringement brought under patent law. *See Motion Picture Patents*, 243 U.S. at 420-421 ("[I]t is not competent for the owner of the patent * * * to send its machines forth into the channels of trade of the country subject to conditions as to use or royalty to be paid, to be imposed thereafter at the discretion of such patent owner. The patent law furnishes no warrant for such a practice, and the cost, inconvenience, and annoyance to the public which the opposite conclusion would occasion forbid it.").

C. The Federal Circuit Disregards Core Patent Exhaustion Principles, And Its Analysis Has So Upset Settled Expectations That It Portends Unfair, Unwarranted, And Untenable Results

1. The Federal Circuit's "conditional sale" analysis is wrong

Contrary to this Court's consistent, longstanding, and principled patent exhaustion doctrine, the Federal Circuit would permit a patent holder to authorize the sale by a licensee of its patented invention and nevertheless maintain after the sale its enforceable patent rights with respect to the article sold. Pet. App. 5a-6a. The Federal Circuit's exhaustion analysis thus reveals *fundamental* misconceptions about patent law and policy, which manifest themselves in several ways.

a. As discussed above, the Federal Circuit does not appear to recognize that a sale creates a *property right* of the purchaser in the patented invention, and that under the well-established jurisprudence of this Court, such property right of the purchaser conflicts with, and outweighs, the patent holder's right to exclude. To conceptualize an authorized sale as simply a matter of "waiver" by the patent holder, *Mallinckrodt, Inc. v. Medipart, Inc.*, 976 F.2d 700, 703 (Fed. Cir. 1992) ("[the] right to exclude may be waived in whole or in part"), mischaracterizes the transaction as one in which the legal consequences can be minimized at the option of the patent holder. The proper legal analysis teaches the opposite: no matter how ardently the patent holder may wish to retain his monopoly, and whatever conditions he

may attempt to impose upon downstream purchasers under penalty of infringement, once the patent holder or its licensee engages in an authorized sale of the patented invention, the purchaser's property interests trump and, with respect to that article, the patent holder's bundle of rights under patent law is extinguished.

b. Similarly, the Federal Circuit evaluates the enforceability of use restrictions on sales "in terms of their relation to the patentee's right to exclude," *Mallinckrodt*, 976 F.2d at 706, when, in fact, such restrictions are creatures of contract that have nothing to do with the scope of the patent monopoly. It is clear beyond cavil that "[t]he exhaustion doctrine finds its basis in the foundations of patent policy, which seeks not only to grant exclusive rights to patentees but also to limit those rights." Julie E. Cohen & Mark A. Lemley, *Patent Scope and Innovation In the Software Industry*, 89 CAL. L. REV. 1, 31 (2001). "Exhaustion represents one such limit * * * : that control ceases with respect to a particular product once [the patent holder or its assignee] has sold that product." *Ibid.*

Failing to recognize that the exhaustion rule is a limitation on the patent holder's right of exclusivity after a sale, the Federal Circuit reasons that whether a patent holder's rights are deemed exhausted turns on the patent holder's own intentions in either selling the patented article outright or, alternatively, restricting the purchaser's use of it as part of the sale. But a sale subject to restrictions is nothing more than a contractual arrangement to limit the manner in which a purchaser will use the purchased article

after sale, and the restrictions derive from the contract itself, not any exclusivity right belonging to the patent holder. *Bloomer*, 55 U.S. (14 How.) at 549-550. Indeed, as petitioners point out, the Federal Circuit's "conditional sale" *non*exhaustion analysis is the same misguided notion that this Court unequivocally rejected when it overruled *Henry v. A.B. Dick Co.*, 224 U.S. 1 (1912), more than 90 years ago. *See Motion Picture Patents*, 243 U.S. at 515.

c. The Federal Circuit is also clearly mistaken to conclude that it is "reasonable" to allow a patent holder to attempt to recover, through an infringement action against downstream purchasers, "the full value of the goods" that it has sold. Pet. App. 5a. This assertion ignores the nature of the "reward" due to the patent holder (*i.e.*, a single royalty or sales price) and again, the Federal Circuit's misguided reasoning demonstrates its disregard for first principles.

A licensee owes a royalty to a patent holder when the licensee makes, uses, or sells the patented invention because it does not otherwise have any rights with respect to the invention covered by the patent. Stern, *supra*, at 465. In effect, a license buys *immunity* from the patent holder's exercise of his right to exclude—*i.e.*, a licensee purchases the right to infringe without consequences—and, of course, each individual who intends to receive such immunity must pay for it.

No royalty, other than the sales price, must be paid when there is an authorized *sale*, however, because the purchaser does not need infringement immunity. Purchasers get "complete title," *Mitchell*,

83 U.S. (16 Wall.) at 548, which "carries with it" the right to use the invention in any manner the new owner wishes, *Adams*, 84 U.S. (17 Wall.) at 455. Thus, unlike a licensee, a purchaser's use or re-sale of a product he buys *does not constitute patent infringement at all*. Put another way, the *title* is the source of the purchaser's authority to use the patented invention. Surely the purchaser need not pay for what he already owns.

2. The Federal Circuit's patent exhaustion ruling puts technological advancements in the biotechnology area at risk

Commercial arrangements related to patent "freedom to operate" require clear legal rules, so that a patent holder knows it has received full value for the sale of its invention (which exhausts its patent rights), or understands that it has protected its ongoing patent rights with a more limited license (which does not exhaust those rights). Moreover, beneficial commercial relationships are possible only when inventors who use patented inventions as building blocks know that the sale to them of a patented article, or the license to them of the right to make, use, or sell, gives them the rights they need without any threat of future infringement actions against them. Scientific progress would be hindered if a patent holder could continuously and unjustifiably assert its patent rights against those who purchase products that incorporate its patented technology, even *after* the patent holder already sold the patented technology, directly or through

authorized sale by its licensee, for use in making the products at issue.

A legal system that is clear and coherent, and that recognizes the rights and interests of all parties in commercial arrangements involving the transfer of patented articles, promotes innovation by encouraging patent holders to disclose their inventions more broadly in exchange for royalties. And it encourages others within the industry to invest in the development of life-saving innovations that use those patented building blocks, without fear that a patent holder might subsequently assert an infringement action against future downstream purchasers of products that incorporate the patented technology.

The Federal Circuit's misinterpretation of the patent exhaustion doctrine undermines this system, and thus has grave implications for the biotechnology industry. As discussed above, the biotechnology sector is second to none with respect to the amount of investment dollars that must be generated at the outset. And that is made possible only by the expectation that someday a discovery will be made, and someday a product will be developed, such that, someday, there will be a strong return on the initial investment. Many biotechnology products require the aggregation of a complex number of patented technologies or components, and the development of such biotechnology products will be significantly curtailed if the legal rules do not clearly establish a viable economic support structure. This could happen in various ways.

The seismic shift that would result from this Court's endorsement of the Federal Circuit's

restriction-based patent exhaustion theory could cause investors in patent-dependent industries to reconsider the propriety of those investments. This is particularly true in the biotechnology industry because the product development process, which can extend for decades, is already less than certain to yield a profitable outcome. Such a venture becomes even less attractive if there can be no reasonable expectation of stability in the governing legal framework.

In addition, because the development of a new biotechnology product depends upon the investors' ability to recoup and potentially profit from their initial outlay, the market price of final products has to be maintained. If biotechnology manufacturers and all downstream purchasers are subject to infringement liability despite purchasing from an authorized seller, products that incorporate patented technology will have to be sold for less than full value, jeopardizing the manufacturers' ability to get the funding necessary to generate those products in the first place. Indeed, it is untenable that a patent holder could threaten an infringement action against downstream owners and, thereby, instantly devalue the final product while it is still in production and long after investors have made the financial commitment to support it. And even the possibility of such a unilateral strike could very well cause small biotechnology manufacturers to fold up their tents and go home.

There is also little doubt that the Federal Circuit's ruling will have the practical effect of increasing the power of the patent monopoly in

business negotiations, because exhaustion will no longer serve as a limitation in *any* respect. Simply stated, if the Federal Circuit's rule were widely accepted, there likely would be no exhaustion at all in this arena because no one who has spent millions of dollars developing a compound or isolating a gene would give it away in the form of an "unconditional" sale. Pet. App. 32a. Patent holders could also extract premiums from risk-averse purchasers shopping for insurance for themselves and their customers to guard against future infringement risks. And that premium would grow, perhaps *exponentially*, based on the depth of the potential customer pool.

At the end of the day, it is hard to see how the Federal Circuit's distortion of the well-settled patent exhaustion rule could lead to any outcome other than a substantial decline in the development of marketable biotechnology products, which would hurt not only biotechnology companies but also the public at large. The consequences become even more untenable—and the Federal Circuit's rule even more absurd—when one considers that the lower court's exhaustion theory appears, on its face, to hinge solely on whether use after sale is restricted, so that a downstream purchaser might be subject to suit for patent infringement even if it *complies* with the use restrictions. For example, Gen-Probe purchases patented products that it incorporates into complex molecular diagnostic kits. It purchases some of these products subject to restrictions on their use after purchase and it complies with those restrictions when developing and producing its kits. The Federal Circuit's determination that a "conditional sale"

precludes patent exhaustion could be misinterpreted to result in Gen-Probe obtaining no freedom from the patents even though Gen-Probe purchases patented products from an authorized seller and uses them in accordance with the restriction. There is no basis in precedent or logic for permitting an infringement suit in these circumstances, but if patent exhaustion does not apply to a "conditional sale," then even a company such as Gen-Probe could be vulnerable to an infringement suit.

Whatever this Court determines regarding the merits of the instant case, it should at least decide the issue before it in a manner that prevents the Federal Circuit's unbounded patent exhaustion language from becoming this Court's rule. The Court should not allow the Federal Circuit's "conditional sale does not exhaust" holding to put at risk even careful and conscientious companies that comply with limitations on use after sale. *Amicus curiae* urges this Court to protect vital investments in life-saving technology by avoiding giving patent holders an unwarranted and unfair windfall against such purchasers. Fundamental fairness demands at least that much.

CONCLUSION

For the reasons set forth above, the Court should reverse the judgment of the court of appeals and remand the case for further proceedings.

Respectfully submitted,

BETH S. BRINKMANN
Counsel of Record
KETANJI BROWN JACKSON
BRIAN R. MATSUI
MORRISON & FOERSTER LLP
2000 Pennsylvania Ave., N.W.
Washington, D.C. 20006
(202) 887-1544

DAVID C. DOYLE
MORRISON & FOERSTER LLP
12531 High Bluff Dr.,
Suite 100
San Diego, CA 92130

NOVEMBER 13, 2007

66531 D

FOR ARGUMENT

26pgs 28

No. 06-937

Supreme Court, U.S.
FILED
DEC 10 2007
OFFICE OF THE CLERK

IN THE

Supreme Court of the United States

QUANTA COMPUTER, INC., ET AL.,
Petitioners,

v.

LG ELECTRONICS, INC.,
Respondent.

ON WRIT OF CERTIORARI
TO THE UNITED STATES COURT OF APPEALS
FOR THE FEDERAL CIRCUIT

BRIEF FOR IBIQUITY DIGITAL CORPORATION AS AMICUS CURIAE SUPPORTING RESPONDENTS

Roderick R. McKelvie
Robert A. Long, Jr.
Counsel of Record
Richard L. Rainey
Theodore P. Metzler, Jr.
Covington & Burling LLP
1201 Pennsylvania Ave. N.W.
Washington, D.C. 20004
(202) 662-6000

December 2007 — *Counsel for Amicus Curiae*

TABLE OF CONTENTS

Page

TABLE OF AUTHORITIES ii

INTEREST OF AMICUS CURIAE 1

STATEMENT 3

SUMMARY OF THE ARGUMENT 14

ARGUMENT 15

The Patent Exhaustion Doctrine Should Not Be Expanded To Invalidate Patent Licensing Agreements That Mutually Benefit The Parties And The National Economy. 15

CONCLUSION 22

TABLE OF AUTHORITIES

Page(s)

REGULATORY AUTHORITIES

In re Digital Audio Broadcasting Sys. & Their Impact on the Terrestrial Radio Broadcast Serv., 17 F.C.C.R. 19990 (FCC Oct. 11, 2002) (First Report & Order) 9, 10

In re Digital Audio Broadcasting Sys. & Their Impact on the Terrestrial Radio Broadcast Serv., 72 Fed. Reg. 45670, (FCC Aug. 15, 2007) (Final Rule) 5, 6, 8, 9, 10

OTHER AUTHORITIES

Paul Davidson, *Radio Ready to Join Digital Revolution*, USA Today, Aug. 24, 2005 ..... 6, 7, 10

Dina ElBoghdady, *The Dawn of HD Radio*, Washington Post, Nov. 6, 2004 3

Glenn Fleishman, *Revolution on the Radio*, N.Y. Times, July 28, 2005 5

Amy Gilroy, *HD Radio: Will More Awareness Translate To Sales?*, TWICE, Dec. 3, 2007 19

Terence O'Hara, *iBiquity Digital's Make-or-Break Point Approaches*, Washington Post, Feb. 28, 2005 ..... 4, 11

John R. Quain, *Tuning in to HD Radio*, U.S. News & World Report, June 14, 2004 19

HD Radio Roll-out Update, http://www.ibiquity.com/i/october_2006.pdf 8

HD Digital Radio Alliance Renews Charter with Marketing Commitment that Takes Total to $680 Million, http://www.hdradio.com/i/Alliance_Charter.pdf (Oct. 15, 2007) 8

WAMU 88.5 American University Radio Demonstrates New Second Channel http://wamu.org/about/press/september_9_2005.php (Sept. 9, 2005) 7

WAMU 88.5 HD Radio Channels, http://www.wamu.org/hd/ 7

INTEREST OF AMICUS CURIAE

iBiquity Digital Corporation ("iBiquity") is the developer of HD Radio™ technology for digital AM and FM radio.[1] This breakthrough technology allows broadcasters to transmit analog AM and FM radio signals simultaneously with new, higher-quality digital signals. The Federal Communications Commission has adopted iBiquity's HD Radio In-Band, On-Channel ("IBOC") system for AM and FM digital radio broadcasting in the United States.

Although the development of HD Radio technology took more than fifteen years and cost more then $100 million, commercial use began only four years ago. On January 7, 2003, Detroit station KISS 102.7 FM broadcast the first commercial HD Radio signal. In January 2004, a consumer in Cedar Rapids, Iowa purchased the first commercial HD Radio receiver.

As of December 2007, more than 1,500 HD Radio stations were on the air, including stations in every major U.S. city. More than 80 percent of the U.S. population resides within the broadcasting range of one or more HD Radio stations. More than 50 different home and automotive HD Radio products are now available to consumers. Countries throughout the world, including Argentina,

---

[1] Pursuant to Rule 37.6, amicus affirms that no counsel for a party authored this brief in whole or in part and that no person other than amicus and its counsel made a monetary contribution to its preparation or submission. The parties' letters consenting to the filing of amicus briefs have been filed with the Clerk.

Australia, Bosnia, Brazil, Canada, Czech Republic, France, Germany, Hong Kong, Indonesia, Mexico, New Zealand, Philippines, Poland, Switzerland, Thailand and Ukraine, have tested or are testing HD Radio broadcasting.

The rapid and widespread commercialization of HD Radio technology is directly tied to iBiquity's business model. iBiquity does not manufacture HD Radio receivers or broadcast equipment. Instead, it licenses its numerous patents, software copyrights, and know-how to others, including experienced manufacturing companies that are in the best position to bring this new technology to market.

Each of iBiquity's licensees – especially those that took early licenses – had to consider the risks of entering a new and unproven market for digital AM and FM, including the possibility that HD Radio technology would not be commercially successful. Through its licensing structure, iBiquity spread this risk across two levels in the manufacturing chain, thus reducing the risk borne by any one party.

At one manufacturing level, iBiquity licenses chip makers to manufacture semiconductor devices that are an important component of every HD Radio receiver, and to use the chips solely for testing purposes. Chip makers are not granted rights to make HD Radio receivers or to sell licensed chips. Rather, they are granted a right to sub-license their use rights when transferring physical possession of the chips. iBiquity collects a royalty from the chip makers for each sub-licensed chip.

At the next level of the manufacturing chain, iBiquity licenses receiver manufacturers to make,

use, and sell HD Radio receiver products incorporating chips from licensed chip makers. iBiquity receives a royalty for each HD Radio receiver sold by licensed receiver manufacturers.

iBiquity believes that an examination of its patent licensing structure, and the reasons for it, may assist the Court in analyzing the issues in this case by demonstrating that a multi-level licensing structure can generate procompetitive benefits for licensees, consumers, and the general economy.

STATEMENT

1. iBiquity and HD Radio Technology. iBiquity is the developer of HD Radio technology, which has been described as "radio's most dramatic technological leap since FM broadcasting debuted more than 50 years ago." Dina ElBoghdady, *The Dawn of HD Radio*, Washington Post, Nov. 6, 2004, at E1. HD Radio broadcasting offers substantial benefits over traditional analog AM and FM radio, including:

- Increased signal clarity and fidelity, resulting in FM-quality sound over AM and near-CD-quality sound over FM;
- Capacity to broadcast up to 8 digital channels, in addition to the existing analog channel, on one FM frequency;
- The ability to provide additional data streams, such as real-time display of program, song title, artist, and album data; and
- The ability to provide a variety of enhanced digital services.

iBiquity and HD Radio technology trace their origins to 1991, when CBS, Gannett, and Westinghouse formed USA Digital Radio Partners, L.P., to explore opportunities for digital AM and FM radio. After several years of testing and development, the company originated In-Band On-Channel ("IBOC") technology, a method of broadcasting that enables digital signals to travel the airwaves alongside traditional analog signals. In 1998, USADR became a separate company, with investments by fifteen of the nation's leading broadcast groups. At the same time, Lucent Technologies was exploring digital radio technology through Lucent Digital Radio ("LDR"). LDR became a separate company in 1999, and in 2000 USADR and LDR merged to form iBiquity Digital Corporation.

iBiquity and its predecessors have spent more than $100 million on its research and development efforts. iBiquity's intellectual property portfolio includes over 120 patents related to HD Radio technology, along with copyrighted implementing software, know-how, and trade secrets. More than half of iBiquity's employees continue to be engaged in research and development. Terence O'Hara, *iBiquity Digital's Make-or-Break Point Approaches*, Washington Post, Feb. 28, 2005, at E1.

HD Radio broadcasting is a form of digital audio broadcasting ("DAB"). Unlike satellite radio, which is also digital, HD Radio broadcasting is used by terrestrial radio stations and is subscription-free to listeners. The technology offers significant advantages over traditional analog radio broadcasting. "The technology sends multiple

streams of data over very narrow frequencies to solve the problems of analog AM and FM reception. The streams are separately received, synchronized and assembled by the radio tuner." Glenn Fleishman, *Revolution on the Radio*, N.Y. Times, July 28, 2005. "HD Radio is capable of a great range with a small fraction of the power of analog radio." *Id.*

HD Radio broadcasting employs what is known as "In-Band On-Channel" technology. It "makes use of the existing AM and FM bands (In-Band) by adding digital carriers to a radio station's analog signal, allowing broadcasters to transmit digitally on their existing channel assignments (On-Channel) while simultaneously maintaining their analog service." *In re Digital Audio Broadcasting Sys. & Their Impact on the Terrestrial Radio Broadcast Serv.*, 72 Fed. Reg. 45670, 45671 (FCC Aug. 15, 2007) (final rule) ("DAB Final Order"). As described by the FCC:

> iBiquity's IBOC DAB technology enables radio stations to provide enhanced sound fidelity, improved reception, multiple audio streams, and new data services. It permits the transmission of near-CD quality audio signals on the FM band, and improved fidelity on the AM band, to digital-ready radio receivers along with information services, such as station, song and artist identification, stock and news updates, and local traffic and weather bulletins. These digital signals are free from the

> static, hiss, pops, and fades associated with the current analog system.

Id.

As with many new technologies, conversion of radio from analog to digital presents substantial logistical challenges. To begin with, there are more than 750 million radios in use in the United States that can receive only analog signals. *See* Paul Davidson, *Radio Ready to Join Digital Revolution*, USA Today, Aug. 24, 2005, at 1B. Unless broadcasters can broadcast digital and analog signals simultaneously, these analog receivers will become obsolete. HD Radio technology solves this problem by allowing broadcasters to transmit a digital signal along with the traditional analog signal using the same spectrum that was previously used for the analog signal alone. *See DAB Final Order*, 72 Fed. Reg. at 45671. HD Radio stations can broadcast their programming in both digital and analog formats without the necessity of reallocating spectrum to handle the increased capacity. *Id.*[2]

iBiquity's technology thus allows a seamless transition from analog to digital radio. Broadcasters can maintain the same radio frequency allocations and continue to broadcast analog signals to analog listeners, while HD Radio listeners will enjoy increased clarity and fidelity and the other benefits available from the technology.

---

[2] If an HD Radio receiver loses the digital signal, it reverts to the analog version of the broadcast until the digital connection is reestablished. *DAB Final Order*, 72 Fed. Reg. at 45671.

iBiquity's HD Radio technology also allows the transmission of far more data than can be transmitted through analog-only broadcasting. This increased capacity can be used for "multicasting" (transmitting additional content on separate digital channels in addition to the main content stream) as well as advanced digital services.

HD Radio broadcasters are already making use of the enhanced capabilities of the technology. "National Public Radio's member stations have taken a leading role in multicasting." Paul Davidson, *Digital radio emerges into the future*, USA TODAY Aug. 24, 2005, at 1B. In September, 2005, Washington D.C.'s WAMU demonstrated the capabilities of HD Radio multicasting by providing "gavel to gavel" coverage of the Senate confirmation hearings for Chief Justice John Roberts on its HD-2 channel while simultaneously broadcasting analog and digital versions of its regular programming without interruption. *See* WAMU 88.5 American University Radio Demonstrates New Second Channel, http://wamu.org/about/press/september_9_2005.php (Sept. 9, 2005).

WAMU currently broadcasts in addition to its regular programming in analog and digital formats, programming on two additional HD Radio channels. WAMU's HD channel 88.5-2 plays bluegrass country music, while channel 88.5-3 provides programming not available on the main channel, including extended BBC news coverage, NPR's Talk of the Nation, and a "funky, eclectic blend of rock, country rock, blues, folk, and world music" during the overnight hours. *See* WAMU 88.5 HD Radio Channels, http://wamu.org/hd/. Of the 1533 stations

now broadcasting an HD Radio signal, 704 offer one or more HD Radio channels beyond their primary program lineup. This additional content is available free of charge to HD Radio listeners, and currently is commercial-free as well. *See* HD Digital Radio Alliance Renews Charter with Marketing Commitment that Takes Total to $680 Million, http://www.hdradio.com/i/Alliance_Charter.pdf (Oct. 15, 2007).

Broadcasters also are making use of HD Radio technology's increased data transmission capacity to offer additional advanced services for HD Radio listeners. One such feature is known as "iTunes® Tagging." This feature allows a listener to "tag" a song that he or she hears on the radio and later purchase the song on the internet from the iTunes website. HD Radio receivers with this feature connect to the user's iPod® personal media player. When the listener hears a song that he or she wishes to purchase, the listener presses a "tag" button on the receiver, and the radio saves the song's information on the iPod. When the listener next connects the iPod to a computer, he or she can then purchase tagged songs directly from iTunes, an online music store for the iPod.

Other planned advanced services include digital surround sound radio, the ability to rewind live audio broadcasts, real-time traffic information, storing and replaying audio broadcasts, multimedia support, an electronic programming guide, subscription services, and on-demand audio. *See* HD Radio Roll-out Update, http://www.ibiquity.com/i/october_2006.pdf at 20-22; *see also DAB Final Order,*

72 Fed. Reg. at 45677 (listing additional data services).

2. FCC's Authorization Of IBOC For Digital Radio. In 2002, the FCC approved iBiquity's IBOC technology for AM and FM digital radio broadcasts in the United States. *See In re Digital Audio Broadcasting Sys. & Their Impact on the Terrestrial Radio Broadcast Serv.*, 17 F.C.C.R. 19990 (FCC Oct. 11, 2002) ("DAB First Report & Order"); *DAB Final Order*, 72 Fed. Reg. at 45670. The FCC found that IBOC provides the best way to advance the Commission's goals "to foster the development of 'a vibrant and vital terrestrial radio service for the public,' and to ensure to the extent possible that existing broadcasters have the opportunity to implement" digital radio. *DAB First Report & Order*, 17 F.C.C.R. at 19993. The Commission found that IBOC "was supported by the broadcast industry and was the only approach that could be implemented in the near future." *DAB Final Order*, 72 Fed. Reg. at 45671. The FCC determined that a uniform approach for digital audio broadcasts "will facilitate an efficient and orderly transition to digital radio." *Id.* at 45672.

iBiquity has agreed to abide by the FCC's patent policy, which requires iBiquity to license all patents that are necessary for implementing IBOC broadcasting to all interested parties on reasonable and nondiscriminatory terms. *Id.* ("iBiquity has committed to license all patents necessary to implement NRSC-5"). The FCC recognized that licensees must "pay licensing fees to the patent holders." *Id.* at 45687. The FCC has undertaken to "monitor the behavior of the patent holders to

determine if the required licensing agreements are reasonable and non-discriminatory." *Id.* In 2007, after seeking comment on iBiquity's licensing practices, the Commission found "that iBiquity has abided by the Commission's patent policy up to this point in the DAB conversion process." *Id.*

3. Bringing HD Radio Technology To Market. Although "[t]he iBiquity system ... represents a remarkable technical achievement," *DAB First Report & Order*, 17 F.C.C.R. at 19995, some have argued that its "[a]doption has been slow, largely because of a chicken-and-egg problem: Radio stations didn't want to buy digital transmitters until more digital radios were on store shelves, and manufacturers were loath to produce the radios until there were more digital broadcasts," Paul Davidson, *Digital Radio Emerges Into the Future*, USA Today, Aug. 23, 2005, at 1B.

In order to transition to HD Radio technology, broadcasters must purchase new equipment and license the software necessary for encoding the digital waveform. On the receiving end, HD Radio technology requires a specialized processor to enable decoding of the digital signal, as well as the hardware necessary for all radios. Chip makers and receiver manufacturers had to take a studied risk to incur the startup costs for manufacturing these new products when the eventual success of HD Radio technology was uncertain.

4. iBiquity's Licensing Program. HD Radio technology can be incorporated into any device that receives radio broadcasts, including car radios, clock radios, tabletop receivers, and portable devices. It would not be practicable for iBiquity, a relatively

small company that is focused on research and development, to manufacture such a diverse array of products, or to meet the volume demand for radios. Instead, iBiquity licenses its technology to chip makers and receiver manufacturers.

"iBiquity is, in essence, an intellectual property company. It owns the patents on all the technology used, from the chips installed in the receivers to the software and gear used by broadcasters to transmit the signal." Terrence O'Hara, *iBiquity Digital's Make-or-Break Point Approaches*, Washington Post, Feb. 28, 2005, at E1. iBiquity's financial success thus depends on implementing a licensing program that complies with its obligation to license on reasonable and nondiscriminatory terms while fostering the availability of HD Radio receivers to consumers.

Given the unavoidable risk to chip makers and equipment manufacturers associated with building HD Radio receivers during the technology's early stages, iBiquity designed its patent licensing structure to limit this risk, and thus promote the introduction and expansion of its new technology.

iBiquity's patent licensing program limits manufacturers' risks in two ways. First, iBiquity divides the royalty for the full value of its invention across two different levels in the manufacturing chain. Second, iBiquity bears much of the risk itself by deferring its realization of a full royalty until a finished product reaches the market.

iBiquity divides the royalty for its inventions by separately licensing chip makers and receiver manufacturers. At the chip level, iBiquity minimizes

the chip makers' patent licensing costs by charging a reduced royalty rate in exchange for limited patent rights. The chip maker benefits from paying less and can offer its chips for less, making it more likely that receiver manufacturers will purchase the chips and the chip maker will realize a return on its investment.

This arrangement benefits the chip manufacturer directly by lowering its royalty, and also benefits the receiver manufacturer by lowering the cost of the processor it must incorporate into every HD Radio receiver. Moreover, the receiver manufacturer does not pay for the full value of iBiquity's invention because the royalty expense is shared with the chip makers.

This licensing structure allows iBiquity to bear some of the risk associated with HD Radio technology becoming successful. Receiver manufacturers defer making any royalty payments until the completed HD Radio receiver is actually sold. Because iBiquity does not realize the full value of its invention until a product reaches the market, the license structure shifts some of the risk that the receiver will not sell from the manufacturers back to iBiquity.

a. iBiquity's chip maker license. Every HD Radio receiver has a specialized processor that decodes the digital HD Radio waveform received over the airways. iBiquity's license to companies that produce these chips limits their rights under the licensed patents. The chip maker may manufacture HD Radio chips, but it may not use those chips for any purpose other than testing. In addition, the chip maker is not granted rights to sell the chips. The

licensee may sublicense its testing rights, but only if it provides the sublicensee with a specific notice of the limitations of the sublicense. The notice and iBiquity's chip maker license both state that there is no implied license to sell HD Radio chips, and that unauthorized sale of the chips, alone or as a component of another device, constitutes patent infringement.

Under the license, iBiquity reserves the right to license and receive a royalty from HD Radio receiver manufacturers (the chip maker's customers). The license specifically disclaims that any sublicense constitutes a sale that would exhaust iBiquity's patent rights, or confers any implied license on the sublicensee. Each licensed chip maker must acknowledge that it has not received full rights to use or sell HD Radio receivers, and that it cannot convey such rights to its customers.

b. iBiquity's receiver manufacturer license. iBiquity's receiver manufacturer license complements the chip maker license. Each licensee acknowledges that it does not receive an implied license to use or sell HD Radio chips from the chip maker, and instead receives only a sublicense of the rights granted under the chip maker's license. The license goes on to grant the receiver manufacturer a royalty-bearing license to make, use, or sell products incorporating the licensed HD Radio patents, but specifically identifies the license from iBiquity as the sole source of the right to use and sell the products. Accordingly, a sale under the receiver manufacturer's license exhausts iBiquity's patent

rights in the receiver.[3] Royalties under iBiquity's receiver manufacturer license are due only upon invoiced sale of licensed products.

The chip makers and receiver manufacturers that have licensed HD Radio technology from iBiquity are sophisticated businesses, and include Texas Instruments, NXP (formerly Philips) Semiconductor, Sony, Yamaha, Kenwood, and Audiovox, among others. iBiquity's patent licensing program allocates the risks inherent in developing an uncertain new technology among the parties who stand to gain or lose the most from that technology. Taken together, iBiquity's licenses allow manufacturers of HD Radio equipment to defer a substantial portion of the royalties due on iBiquity's patents unless and until the licensed product finds a purchaser.

SUMMARY OF THE ARGUMENT

iBiquity's patent licensing arrangement demonstrates the advantages of a two-tiered licensing program, and shows why the Court should not adopt an overly-expansive version of the patent exhaustion doctrine. Companies like iBiquity invest substantial resources in discovering and developing innovative new technologies. Such companies should be permitted to structure their patent licensing programs in ways that they and their licensees believe will best promote the further development and commercialization of their inventions.

---

[3] Both the chip maker license and the receiver manufacturer license contain similar limitations with respect to iBiquity's copyrighted software.

A two-tiered licensing program such as iBiquity's affords companies seeking to introduce a new technology into the marketplace the ability to share the risks, as well as the rewards, of the new technology. Such licensing agreements benefit not only the parties to the patent licensing agreement, but also consumers and the national economy. There is no valid reason why this type of licensing agreement should be barred by the patent exhaustion doctrine.

ARGUMENT

The Patent Exhaustion Doctrine Should Not Be Expanded To Invalidate Patent Licensing Agreements That Mutually Benefit The Parties And The National Economy.

iBiquity's patent licensing arrangement provides an instructive example of the reasons why the Court should not adopt an overly-expansive interpretation of the patent exhaustion doctrine. This licensing structure, willingly entered into by numerous sophisticated companies, has enabled iBiquity to bring a new technology to market. Because this type of licensing structure serves "to promote the Progress of Science and useful Arts," U.S. Const. art. I § 8, it should be permissible under the patent exhaustion doctrine.

1. In bringing its breakthrough technology to market, iBiquity faced a significant challenge common to many inventors: It lacked the financial resources, capacity, and experience necessary to produce a range of new products, and so had to persuade other companies, including manufacturers

of chips and receivers, to invest in the technology before it had been accepted by, or even introduced to, consumers. If these manufacturing companies had been unwilling to invest the resources needed to produce HD Radio chips and receivers, iBiquity's technology might never have come to market.

iBiquity met this challenge by creating a two-tiered licensing program that reduces the licensee's risks of bringing a new technology to market by (1) spreading royalty costs among a larger group of companies in the manufacturing chain, and (2) deferring a substantial percentage of royalty costs until finished products are actually sold.

iBiquity has entered into separate licensing agreements with chip makers and receiver manufacturers. iBiquity grants chip makers a limited set of rights to make chips and to use them solely for testing purposes. iBiquity grants receiver manufacturers rights to make, use, and sell receivers embodying iBiquity's patents. The royalty paid by receiver manufacturers is based on units sold. Once it licenses receiver manufacturers, iBiquity considers its patent rights exhausted with respect to that manufacturer. It does not seek to collect any additional royalties from distributors, retailers, or consumers.

This two-level royalty structure has the effect of limiting the degree of risk assumed by any one company in the manufacturing chain. Because royalty costs are spread over the production process, chip manufacturers at the front end of the manufacturing process are able to assume less risk that the finished products will not be commercially successful. In addition, iBiquity itself shares some of

the risk of introducing the new technology, by deferring a substantial portion of the royalty it receives until a receiver unit is completed and actually sold.

Because iBiquity's licensing structure reduces the costs and risks of producing chips and receivers, manufacturers find it more attractive to invest in producing HD Radio products. If iBiquity were required by the patent exhaustion doctrine to collect a single royalty from chip makers (and no royalty from receiver manufacturers), it would significantly increase the cost of chips. Chip makers might well have viewed a license with a substantial up-front royalty as too expensive and risky. They may have decided not to take a license or produce any chips at all. If that had happened, HD Radio technology may never have come to market.[4]

Even if chip makers were willing to pay a high royalty in return for a license to produce chips, the resulting cost of the chips to receiver manufacturers might well have been too high to justify entering the market. Chip makers frequently price chips so as to recover a multiple of the cost of producing the chips. A substantial increase in the royalty cost to chip

---

[4] Additional aspects of iBiquity's patents and patent licenses ensure the validity of its patent licenses even under the expanded version of the patent exhaustion doctrine advocated by petitioners. For example, many of iBiquity's patents read on receivers, not the chips, which are only a component of the finished product. Moreover, iBiquity's chip maker licensees do not receive the right to sell patented HD Radio technology. *See supra*, pp. 12-13. It is important to note, however, that the risk-sharing argument set out in this brief does not turn on these additional features.

makers thus could have resulted in a chip cost that exceeded the combined cost of the chip plus the receiver manufacturer's royalty. Receiver manufacturers could well have found the chips too expensive to justify an investment in producing receivers, particularly in the early stages of the technology, when sales of HD Radio receivers were just beginning. A rigid limitation on the licensing options available to patentees thus could have blocked HD Radio technology from getting off the ground.[5]

It is no answer to say that iBiquity could have charged a very low royalty, or no royalty at all, until it became clear whether HD Radio technology would succeed or fail. iBiquity and its corporate predecessors have invested over a hundred million dollars in developing the patented HD Radio technology, and iBiquity continues to employ numerous engineers and scientists to further develop the technology. If companies in iBiquity's position were limited to charging an artificially depressed royalty for a period of years, there would be less money to invest in research and development, and some highly beneficial innovations such as HD Radio technology might never be developed at all.

2. iBiquity's licensing arrangement benefits both the parties to the licensing agreement and

---

[5] If chip makers realized that receiver manufacturers were unwilling to buy chips at a price that includes a full royalty plus the chip maker's mark-up, the chip maker would quickly cease producing chips, or would decline to produce them in the first place.

consumers. Licensees benefit because companies at different levels of the manufacturing chain are able to share the risks of producing a product that has not yet achieved widespread market acceptance. iBiquity's licensees are sophisticated businesses. Indeed, many are larger and more powerful than iBiquity. The fact that these sophisticated companies have structured their patent licensing agreements in this way is powerful evidence that a two-royalty structure is an efficient risk allocation structure that benefits the licensees.

A two-tier royalty system also benefits consumers, by encouraging manufacturers to produce products that embody innovative new technologies that otherwise might not make it to market at all. Once a new product is successfully introduced into the marketplace and purchased by a sufficient number of "early adopters," economies of scale can take hold and allow more units to be produced at a lower price, inducing more consumers to purchase the product.[6] But this "virtuous cycle" cannot take hold unless the initial products can be brought to market. iBiquity's patent licensing structure is an efficient way to overcome this barrier.

This approach also benefits consumers by reducing that portion of a finished receiver's selling price attributable to manufacturer markups. When

---

[6] This has been true for HD Radio technology. The first HD Radio receivers marketed to consumers were priced from $500 to $1000; HD Radio receivers are now available for as little as $119. *See* John R. Quain, *Tuning in to HD radio*, U.S. News & World Report, June 14, 2004; Amy Gilroy, *HD Radio: Will More Awareness Translate To Sales?*, TWICE, Dec. 3, 2007.

a chipmaker determines the selling price of a chip, it imposes a markup based on its costs, including any royalty it must pay. The receiver manufacturer in turn imposes its own markup based on its costs, including the cost of the chip. The royalty at the chip level is therefore marked up twice by the time a finished product reaches a consumer. Minimizing the royalty at the chip level therefore minimizes the pass-through cost of the royalty to consumers.

iBiquity's licensing program also has provided consumers with a wider choice of products in the marketplace, because iBiquity was able to enter into agreements with multiple chip makers and receiver manufacturers. If iBiquity had been required to collect a single royalty, many manufacturers might have declined to enter into licensing agreements with iBiquity, resulting in fewer choices to consumers – or no choices at all.

3. iBiquity's licensing structure demonstrates the procompetitive results that can be achieved through a multi-level licensing approach. Petitioners and some amici, however, suggest that there is no legitimate reason for a patentee to divide its royalties across multiple levels. *See, e.g.*, Pet. Br. at 49 ("There is only one reason why a patentee might want to parcel its royalty out between different levels of the distribution chain: to prevent arbitrage . . . ."); Br. of Amer. Antitrust Inst. at 27 (the Federal Circuit's decision "impair[s] competition and innovation").

Amici Dell et al. in particular insist that "[n]o business contemplating manufacture or use of an article that infringes a patent would enter into a licensing agreement with—and pay significant value

to—a patent owner, when that businesses' customers could not use or sell the resulting products without negotiating a separate license with the patent owner." Br. of Dell et al. at 13. But iBiquity's licensees have entered into precisely such an arrangement, and have found it to be in their economic interests.

Petitioners' amici also make the sweeping assertion that the Federal Circuit's approach in this case "is not necessary to enable patent owners to obtain full compensation for use of their invention." *Id.* at 4. This argument ignores the risk-sharing and other advantages of a royalty-splitting arrangement that inure to licensees of new technology that requires multiple layers of manufacturing. Patent owners cannot obtain "full compensation for use of their invention" if the economics of the product would prevent manufacturers from entering into a manufacturing license in the first place.

To the extent there is any concern that a multi-level licensing structure might be anticompetitive, that concern is addressed by existing mechanisms apart from the patent exhaustion doctrine. Every patent license remains subject to scrutiny under the antitrust laws. In addition, markets can be self-regulating. For example, when the FCC authorized IBOC for digital radio broadcasting, iBiquity agreed to license all of its patents that are necessary to implement this technology to any interested party on reasonable and nondiscriminatory (RAND) terms. iBiquity's agreement to license its patents on RAND terms is not unusual. Many companies make the same commitment when their technologies are adopted as

industry standards. This type of reasonable commercial behavior – by both patent owners and the other companies in the industry adopting the technology as a standard – demonstrates that the marketplace can and does self-regulate to achieve procompetitive results that benefit the patent owner, its licensees, and consumers.

In sum, an overly-aggressive approach to patent exhaustion is unnecessary, and in fact would be counter-productive. There is no need to expand the judge-made doctrine of patent exhaustion to invalidate licensing agreements willingly entered into by both parties to their mutual benefit, and to the benefit of consumers and the national economy.

CONCLUSION

The judgment of the court of appeals should be affirmed.

Respectfully submitted,

Roderick R. McKelvie
Robert A. Long, Jr.
Counsel of Record
Richard L. Rainey
Theodore P. Metzler, Jr.
Covington & Burling LLP
1201 Pennsylvania Ave. N.W.
Washington, D.C. 20004
(202) 662-6000

December 2007

Counsel for Amicus Curiae.

56528a
23pp

25

No. 06-937

IN THE

Supreme Court of the United States

QUANTA COMPUTER, INC.,
QUANTA COMPUTER USA, INC.,
Q-LITY COMPUTER, INC.,
Petitioners,

v.

LG ELECTRONICS, INC.,
Respondent.

On Writ of Certiorari to the United States Court of Appeals for the Federal Circuit

BRIEF OF *AMICUS CURIAE* INTELLECTUAL PROPERTY OWNERS ASSOCIATION IN SUPPORT OF THE RESPONDENTS

Of Counsel:

MARC S. ADLER
President
RICHARD F. PHILLIPS
Chair, Amicus Brief Committee
INTELLECTUAL PROPERTY OWNERS ASSOCIATION
1255 Twenty-Third Street, N.W., Suite 200
Washington, D.C. 20037
(202) 466-2396

GARY M. HOFFMAN
(Counsel of Record)
KENNETH W. BROTHERS
KIMBERLY R. PARKE
NICHOLAS A. GILLARD-BYERS
DICKSTEIN SHAPIRO LLP
1825 Eye Street, N.W.
Washington, DC 20006
(202) 420-2200

Counsel for Amicus Curiae

December 10, 2007

WILSON-EPES PRINTING CO., INC. – (202) 789-0096 – WASHINGTON, D. C. 20002

BEST AVAILABLE COPY

TABLE OF CONTENTS

	Page
TABLE OF AUTHORITIES	ii
INTEREST OF *AMICUS CURIAE*	1
INTRODUCTION	2
SUMMARY OF ARGUMENT	3
ARGUMENT	5
I. THE PATENTEE'S ABILITY TO GRANT LIMITED LICENSES IS A RIGHT INHERENT IN THE PATENT GRANT	5
II. CONDITIONAL LICENSING IS A COMMON PRACTICE IN MANY INDUSTRIES	7
III. PUBLIC POLICY FAVORS ENFORCING CONDITIONAL SALES OR LICENSES	12
IV. CONDITIONAL LICENSES ARE SUBJECT TO PATENT EXHAUSTION WHEN PAIRED WITH AN ABUSE OF PATENT RIGHTS	14
A. Patent Exhaustion Applies In Cases of Antitrust Violations	15
B. Patent Exhaustion Applies When a Patentee Attempts To Limit the Use of an Article to a Geographic Region	16
CONCLUSION	17
APPENDIX	1a

TABLE OF AUTHORITIES

CASES	Page
Adams v. Burke, 84 U.S. (1 Wall.) 453 (1873)	16
American Cotton-Tie Co. v. Simmons, 106 U.S. 89 (1882)	7
B. Braun Medical, Inc. v. Abbott Labs., 124 F.3d 1419 (Fed. Cir. 1997)	3, 6
E. Bement & Sons v. National Harrow Co., 186 U.S. 70 (1902)	13
Gen. Talking Pictures Corp. v. W. Elec. Co., 305 U.S. 124 (1938)	5, 7, 11
Hobbie v. Jennison, 149 U.S. 355 (1893)	16
Keeler v. Standard Folding-Bed Co., 157 U.S. 659 (1895)	16
Mallinckrodt, Inc. v. Medipart, Inc., 976 F.2d 700 (Fed. Cir. 1992)	6, 7, 11
Mazer v. Stein, 347 U.S. 201 (1954)	8
Providence Rubber Co. v. Goodyear, 76 U.S. (9 Wall.) 788 (1869)	5, 11
United States v. Univis Lens Co., 316 U.S. 241 (1942)	6, 15

OTHER AUTHORITIES	
Supreme Court Rule 37.6	1
U.S. Constitution Article I, § 8	4

IN THE

Supreme Court of the United States

No. 06-937

QUANTA COMPUTER, INC.,
QUANTA COMPUTER USA, INC.,
Q-LITY COMPUTER, INC.,
Petitioners,

v.

LG ELECTRONICS, INC.,
Respondent.

On Writ of Certiorari to the United States Court of Appeals for the Federal Circuit

BRIEF OF *AMICUS CURIAE* INTELLECTUAL PROPERTY OWNERS ASSOCIATION IN SUPPORT OF THE RESPONDENTS

INTEREST OF *AMICUS CURIAE*

Amicus Curiae Intellectual Property Owners Association (IPO), a tax-exempt association, is a national organization founded in 1972 to represent the owners of intellectual property in the United States.[1] IPO's members currently include over 140

[1] Pursuant to this Court's Rule 37.6, *amicus* represents that this brief was not authored in whole or in part by counsel for any party. No IPO member has made a monetary contribution to the preparation or submission of this brief beyond normal

large and mid-sized companies and over 550 small businesses, law firms, inventors, authors, universities, executives and attorneys who own or are interested in patents and other forms of intellectual property in any industry or field of technology. IPO members are granted about 30 percent of the patents issued by the U.S. Patent and Trademark Office to U.S. nationals. IPO regularly represents the interests of its members before Congress and the U.S. Patent and Trademark Office and has filed *amicus curiae* briefs in this Court and other courts on significant issues of intellectual property law.

IPO is concerned with the interests of all of its members in all industries and all fields of technology. IPO believes that the position of Petitioners in their petition for writ of certiorari and in their initial brief would, if accepted, have wide-reaching implications on existing intellectual property agreements, causing uncertainty in the business community concerning current and future intellectual property licenses, assignments and other contracts.

In this brief, IPO explains how an adoption of the Petitioners' position would affect the business community. The filing of this brief was approved by the 50-member IPO Board of Directors, the members of which are listed in the Appendix.[2]

INTRODUCTION

Respondent LG Electronics, Inc. (LGE) cross-licensed its patent portfolio to Intel Corp. in 2000.

---

membership dues payments. Counsel of record for all parties have consented to the filing of this brief.

[2] IPO procedures require approval of positions in briefs by a three-fourths majority of Directors present and voting.

While Intel received complete rights to make, use, and sell products covered by LGE's patents, LGE alleges that the license excluded downstream purchasers (including Petitioners) who purchased the patented microprocessors and chipsets from Intel. LGE alleges that Petitioners used those Intel products to create new products or processes—different from the licensed Intel products—that infringed LGE's patent rights. LGE alleges that Petitioners had notice that the purchase of the patented microprocessors and chipsets did not include a license to combine them with other non-Intel products, which would result in infringement of LGE's patents. The United States Court of Appeals for the Federal Circuit reversed the District Court for the Northern District of California's grant of summary judgment of non-infringement in favor of Petitioners on the basis of patent exhaustion. The panel decision relied on the distinction between conditional sales and unconditional sales drawn in *B. Braun Medical, Inc. v. Abbott Labs.*, 124 F.3d 1419 (Fed. Cir. 1997) and held that LGE's conditional license to Intel did not grant Petitioners the right to practice all patents in LGE's portfolio.

SUMMARY OF ARGUMENT

This Court has long held that a patentee has the right to lawfully condition the sale or license of a patented product to limit the scope of the patent rights granted. Downstream purchasers should not be able to claim broader patent rights than those held by the party from whom they purchase.[3]

---

[3] This analysis does not depend on whether the patent is for a product or method.

Many businesses rely upon conditional licenses or sales in order to ensure rational distribution of intellectual property rights through a value-added chain of distribution, while providing an adequate reward for the development and public disclosure of the Constitutionally protected "Progress of Science and useful Arts." U.S. Const. art. I, § 8. Petitioners' position would jeopardize long-accepted business practices sustained by this Court in a wide range of industries, from the development and sale of genetically modified seeds, to microchip designs, to the sale and use of copyrighted content, such as video and music on DVDs and CDs.

If there is no material non-infringing use of a product, then the doctrine of patent exhaustion may be properly invoked to prevent patentees from collecting twice on the same product—once for the product itself and a second time for the patented use of the product—absent a clearly stated condition in the sale or license by the patentee that the purchase of the item does not convey a right to practice the patented use. For example, where a product is sold or licensed without restriction and the only material use of that product would infringe another patent owned by the seller or licensor, then patent exhaustion would preclude any further effort by the seller or licensor to collect royalties or damages. Otherwise, the patentee effectively would be able to collect twice from the purchaser or licensee who had properly believed, because there was no conditioning of the sale or license, that he was entitled to freely use the product, which was sold or licensed with no material non-infringing use.

Petitioners' purchase of a product from Intel does not automatically exhaust LGE's patents. Peti-

tioners' use of LGE-licensed Intel products does not grant them a license to practice all of LGE's patents. This case is fundamentally different from this Court's past applications of the doctrine of patent exhaustion, which were developed in light of patentees' misuse of patent rights. The doctrine of patent exhaustion can find no application in a case where there is no allegation of illegal conduct by the patentee, in circumstances where the patentee has appropriately conditioned the license it granted.

ARGUMENT

I. THE PATENTEE'S ABILITY TO GRANT LIMITED LICENSES IS A RIGHT INHERENT IN THE PATENT GRANT

This Court has long sustained the rights of patentees to enforce conditions in license agreements. In *Providence Rubber Co. v. Goodyear*, 76 U.S. (9 Wall.) 788 (1869), Goodyear owned patents relating to India-rubber fabrics, and granted a conditional license to E. M. Chafee allowing him to practice the patents at Chafee's own place of business but prohibiting the sale of licensed products to the U.S. government. This Court approved the license conditions. By 1938, this Court had noted that "the practice of granting licenses for a restricted use is an old one." *Gen. Talking Pictures Corp. v. W. Elec. Co.*, 305 U.S. 124, 127 (1938) (citing to *Providence Rubber Co.*, 76 U.S. at 799). In *General Talking Pictures*, a patentee granted a limited license to manufacture amplifiers for either home use or commercial use (e.g., in a movie theater). *Id.* at 126. This Court upheld the condition, noting "[t]hat a restrictive license is legal seems clear." *Id.* at 127 (citing *Mitchell v. Hawley*, 83 U.S. (16 Wall.) 544 (1872)).

This Court's holdings have been widely understood to mean that "express conditions accompanying the sale or license of a patented product are generally upheld." *B. Braun Medical*, 124 F.3d at 1426 (Fed. Cir. 1997).

By contrast, a patent holder may choose instead to sell patented articles or license its technology without restriction, thus exhausting its patent rights with respect to the sold or licensed article. In *United States v. Univis Lens Co.*, 316 U.S. 241 (1942), this Court held:

> The patentee may surrender his monopoly in whole by the sale of his patent or in part by the sale of an article embodying the invention. His monopoly remains so long as he retains the ownership of the patented article. But sale of it exhausts the monopoly in that article and the patentee may not thereafter, by virtue of his patent, control the use or disposition of the article.

Id. at 250 (citing *Bloomer v. McQuewan*, 55 U.S. (14 How.) 539, 549-50 (1852)). Thus, this Court has focused upon the scope of the grant by the patentee to determine whether the patent has been exhausted, or whether the patentee has reserved a portion of "the exclusive Right" protected by the Constitution.

The Federal Circuit likewise has focused upon the scope of the grant of the patentee to determine the propriety of conditional sales and licenses. In *Mallinckrodt, Inc. v. Medipart, Inc.*, 976 F.2d 700 (Fed. Cir. 1992), the patented device was sold to hospitals and clearly marked with a notice that it was for "single use only." Medipart collected the devices and rebuilt them so they could be used again. Mallinckrodt's infringement action was rejected by

the district court on summary judgment. Applying *General Talking Pictures*, the Federal Circuit reversed, holding that a sale could properly be conditioned as "single use only," thus rendering re-use an infringing act. As long as the condition was reasonably related to the subject matter within the scope of the patent claims and did not otherwise violate any law, such a condition was enforceable. "[A]ny conditions which are not in their very nature illegal . . . , imposed by the patentee and agreed to by the licensee . . . will be upheld by the courts." *Mallinckrodt*, 976 F.2d at 703. *Mallinckrodt* is consistent with *American Cotton-Tie Co. v. Simmons*, 106 U.S. 89 (1882), in which this Court upheld a finding of infringement when the patented product was stamped "licensed to use once only" and the defendants rebuilt and resold the patented product for re-use.

II. CONDITIONAL LICENSING IS A COMMON PRACTICE IN MANY INDUSTRIES

This Court should not lightly disrupt the well-established principle that limited license grants and conditional sales do not exhaust a patentee's ability to control the use of its intellectual property. Relying on this Court's well-settled precedent, there is a broad practice among owners of intellectual property of relying on the ability to condition sales of patented goods.

For example, owners of copyrighted works such as video, music, and software commonly sell CDs or DVDs with a limitation that they are for "home use only." The same content is sold to commercial users at a much higher price, reflecting the greater value of the CD or DVD to a commercial user. Copyright

holders long have recognized that the economic value of the right to play a movie in public for a large number of people, to use music in the soundtrack of a movie or television show, or to use software in a Fortune 100 corporation is significantly greater than the economic value of an individual's private use of the same movie or song or software. Conditional licenses and sales of intellectual property ensure that the price for the right to use the protected intellectual property is commensurate with its economic value. If such conditional licenses were not possible, creators of copyrighted content, whether they are musicians, studios, or software designers, would not receive appropriate economic compensation for commercial use of their work. "The copyright protects originality rather than novelty or invention—conferring only 'the sole right of multiplying copies.'" *Mazer v. Stein*, 347 U.S. 201, 218 (1954). The same rule should apply to patent holders. There is no basis in law, logic, or public policy for differentiating between the copyright interest and the patent interest in permitting conditioned sales.

Applying this rule to patent rights is proper for three reasons. First, the same patented product may have different economic value depending upon its use. Second, a patent may have multiple embodiments, and each embodiment may have a distinct application and different value. Third, one patent claim may cover a single component while a separate claim may cover the component in a completed system. A manufacturer of the component would require a license only for the former, while a company that adds value by assembling a complete system would require a license only for the latter, so a conditional license to each (at a lower price than the whole) optimizes economic efficiency.

The economic problems and disincentives to licensing that would result from Petitioners' contrasting rule are illustrated by genetically modified crop seeds, which can significantly increase the yield-per-acre of valuable crops. In an economically rational system, an owner of a patent for such seeds will be allowed to condition a sale so that the purchaser can use the patented seeds only to create harvestable food products and cannot create a new crop of genetically modified seeds to be replanted. Otherwise, the patent owner, faced with the prospect of its purchasers becoming competitors by selling the next generation of seeds, would have to recoup its entire investment in the first season of sales. It is easy to see that for seeds requiring years of costly and risky research this would be impossible. The net result of Petitioners' rule, then, would be to discourage the investment risk necessary for such products and many beneficial technologies would never be developed at all. It is thus advantageous to both the patent holder and the licensee, as well as to society, that the licensee should be permitted to pay a lower price for a limited right under the patent. If a farming company desires to harvest seeds for sale or use as seeds, rather than as a food crop, it should negotiate a license to pay a higher fee for that more valuable use of the patented technology.

Conditioned sales of patented goods are also common in the electronics industry. For example, a patented microprocessor may provide increased speed over previous processors. This increased speed could be of greatest economic value in high-end research computers and of relatively lower value in home use PCs. Thus, the maximum value of the identical patented component can depend upon its use. While such a processor has some value to all computer

manufacturers, its value is greatest when put to optimal use. The patentee may wish to sell the processor at its highest price for its optimal use and charge a lower price for other uses. The patentee should be able to manufacture and sell the processors at a lower price to those who buy subject to the condition that they will not be resold for use in high-end computers. If the Court were to adopt Petitioners' position, however, an inventor of that patented processor could not provide this differential pricing dependent upon use. Instead, the patentee would have to offer licenses to manufacturers at a rate representing the highest value of the patent, which would increase the costs of all systems using the technology and likely reduce its market share. Alternatively, the patentee could price the patented product as a commodity, thereby foregoing compensation for the full value of the innovation and decreasing the incentive to develop new and better processors.

Similarly, patents in the software industry often cover software products that are applicable in a variety of contexts. A technology for organizing and optimizing the use of memory in a computer, for example, would be useful when incorporated into a memory-intensive software application, but it could be far more useful (and valuable) when incorporated into an operating system. Petitioners' approach denies software developers the ability to license patented technology at a rate that is appropriate for their individual use. Instead, a developer hoping to use the technology in a low-value application would be forced to pay the same license fee that a company such as Microsoft would pay to incorporate the technology into a high-value operating system.

In the pharmaceutical context, a patented compound that has multiple uses typically will have greater value for one use than for another, so patentees license the patent to manufacturers with certain conditions regarding the use for which they may manufacture the compound.[4] A patented compound used to treat heart disease may have immense value and will demand a high license fee. If the same patented compound may also be used in hair conditioner, it might bring a lower license fee for that purpose. Petitioners' approach to patent exhaustion would allow a distributor to buy subject to a condition that it could only resell the compound as hair conditioner, pay a lower sales price, then sell the compound at a premium to companies that repackage and sell it for its regulated use to treat heart disease. Though the patentee took all reasonable steps to protect its rights, and though the eventual medical use of the compound was never authorized by the patentee, the rule proposed by the Petitioners would preclude the patentee from pursuing an infringement case – contrary to the long line of cases exemplified by *Providence Rubber Co.*, 76 U.S. 788, *General Talking Pictures*, 305 U.S. 124, and *Mallinckrodt*, 750 F.2d 700.

The use of conditional licensing is so widespread that almost every industry routinely employs it and, as a result, its impact is felt throughout the population. A device embodying a patented method for determining location based on GPS[5] signals may

---

[4] This example has been simplified for illustrative purposes and does not take into account any regulatory approval issues.

[5] GPS, or global positioning system, is a satellite-driven navigation system that allows receivers to determine their location from microwave signals.

provide a certain level of accuracy (and command a proportionate license fee) when used to manufacture navigation systems for use in low cost personal GPS systems, while the same method may garner a much higher license fee when used in more exacting applications such as surveying or aircraft navigation systems. A patented method for encrypting and securing data has value to certain Internet-based shopping sites, and the same method may have far more value (and correspondingly higher licensing rates) when used in higher-end applications, such as commercial inter-bank communications. These are only a few of the thousands of examples that one may encounter on a daily basis demonstrating that patent owners, just like copyright holders, require the ability to condition licenses in order to make their property available for many different applications on a sensible economic basis, with those who derive the greatest benefit from the patented invention paying the most and those deriving the least benefit paying least.

III. PUBLIC POLICY FAVORS ENFORCING CONDITIONAL SALES OR LICENSES

Sound public policy supports enforcing conditioned sales or limited licenses of patented goods. An owner of a property right generally can condition the use of that right by another; thus, a patent owner should be able to fashion a license that grants less than the full patent right. It should be no different when a patentee elects to manufacture the patented item itself rather than grant another the license to do so.

Conditioned sales of a patented good, provided the limitation is lawful, are entirely consistent with the policy underlying the patent law, as articulated by

this Court in *E. Bement & Sons v. National Harrow Co.*, 186 U.S. 70, 91 (1902):

> The very object of these [patent] laws is monopoly, and the rule is, with few exceptions, that any conditions which are not in their very nature illegal with regard to this kind of property, imposed by the patentee and agreed to by the licensee for the right to manufacture or use or sell the article, will be upheld by the courts.

If this Court adopts the rule advanced by Petitioners, then patentees will be forced to shift to less efficient methods to obtain protection for their inventions to the detriment of the patent system, licensees, and ultimately the public. A patentee today might obtain one patent covering an invention with dependent claims directed to the invention in combination with other components. A patent for a piston, for example, may include claims to the piston in combination with a crankshaft (or a special kind of crankshaft or engine) or claims to cover a method of fabricating the piston. Under Petitioners' rule, the patentee would be induced to file several patents of varying scope so that a sale under one of them would not exhaust the patentee's entire patent rights. In the piston example, the patentee would license one patent to a manufacturer covering only the piston itself. Once a purchaser of the manufacturer's piston attempts to use it in combination with a particular crankshaft in a certain kind of engine, the patentee would then offer a license to that purchaser for a different patent covering the combination. This process, repeated for inventions with more applications, would greatly increase the cost of patenting and increase the difficulties in securing patent clearance for competing manufacturers.

Shifting the burden from license agreements to the patenting process would create a number of undesirable consequences. Inventors would be forced to file many patent applications to cover each intended use or embodiment of an invention. Applicants would thus be forced to anticipate all possible options regarding the use and marketing of the product and file separate applications for each. This would increase the number of applications filed with the already overburdened U.S. Patent and Trademark Office. In contrast to the licensing practices in place today, which permit patentees and manufacturers to negotiate and accept conditions, the Petitioners' approach would encourage gamesmanship. It would encourage patentees to atomize their inventions into separate applications in order to do what can be done today much more simply and rationally by making a sale subject to clearly stated lawful conditions on the licensed use.

Logic and sound public policy require notice but only by the patentee to the first purchaser or first licensee. Thus, when a patentee grants a limited patent right and wishes to enforce its reserved patent rights against infringers who act outside of the license grant, clear notice to the first purchaser or first licensee is necessary.

IV. CONDITIONAL LICENSES ARE SUBJECT TO PATENT EXHAUSTION WHEN PAIRED WITH AN ABUSE OF PATENT RIGHTS

Petitioners and some *amici curiae* argue that the conditional license at issue in this case cannot be squared with this Court's precedent. Although conditional licenses have been used in the industry

and accepted by this Court for many years, it is equally important for this Court to reinforce its decisions holding that conditional licenses cannot protect abusive or illegal practices. In cases involving conditional licenses that extend a patentee's monopoly too far, patent exhaustion acts as an appropriate limit. For example, this Court has applied the doctrine when the patent owner was committing violations of antitrust laws or trying to impose impermissible geographic restrictions on the use of its products. Understood in this context, there is no conflict between the line of cases reaffirming a patentee's right to grant conditional licenses and the line of cases applying patent exhaustion.

A. Patent Exhaustion Applies In Cases of Antitrust Violations

When a conditional license is used to improperly control downstream pricing after the sale of a patented item, the antitrust laws have been violated, and the conditional license is appropriately voided. In *Univis Lens Co.*, 316 U.S. 241, a patent holder for optical lens technology manufactured only portions of the patented lenses, selling those portions to various manufacturers to complete. Depending on the nature of the manufacturer, the license required a different price for the finished product. This Court found that the patentee had exhausted its rights over the lenses when it sold the unfinished portion to the licensees to finish the product. Thus, the price restrictions, unlawful as a matter of antitrust law, were not justified as an exercise of patent rights.

B. Patent Exhaustion Applies When a Patentee Attempts To Limit the Use of an Article to a Geographic Region

This Court also has applied the doctrine of patent exhaustion to limit a patentee's inappropriate efforts to restrict the use of a patented article after sale to a geographic region within the United States. In *Hobbie v. Jennison*, 149 U.S. 355 (1893), a patentee had licensed a patent on certain types of metal pipes to several companies, with each receiving a certain territory in which it could act as sole licensee. One such licensee, with territory in Michigan, sold pipes within the state to a purchaser who used them in Connecticut. A second licensee, having Connecticut as part of its territory, sued the Michigan licensee. This Court determined that patent exhaustion applied to the pipes because "the sale of a patented article by an assignee within his territory carries the right to use it *everywhere*, notwithstanding the knowledge of both parties that a use outside of the territory is intended." *Id.* at 361 (emphasis added). *See also Keeler v. Standard Folding-Bed Co.*, 157 U.S. 659, 666 (1895) (holding that a purchaser of a patented article from one licensed to sell only in a certain region has a right to use the article "unrestricted in time or place"); *Adams v. Burke*, 84 U.S. (1 Wall.) 453 (1873) (holding that a license containing geographic restrictions could only limit the area of permitted sale, not the area of subsequent use). These cases were, of course, limited to attempts to restrain the use of the product within the United States, as United States patents do not have force or effect outside of the United States.

CONCLUSION

The realities of the market and the nature of patented rights require flexible licensing arrangements. As this Court has held for over one hundred years, patentees may place conditions on their licensing of inventions, so long as they do not use those conditions to abuse their patent rights. Conditional licenses that are used improperly, in violation of antitrust laws, are subject to the doctrine of patent exhaustion. Valid conditional licenses, however, are necessary to both patentees and licensees in order to bring useful technologies to the appropriate markets for an appropriate exchange of economic value. If intellectual property is to be effectively used and protected, the Court must reenforce its precedent endorsing conditional sales and license agreements, when the conditions are not unlawful.

Respectfully Submitted,

Of Counsel:

MARC S. ADLER
President
RICHARD F. PHILLIPS
Chair, Amicus Brief Committee
INTELLECTUAL PROPERTY OWNERS ASSOCIATION
1255 Twenty-Third Street, N.W., Suite 200
Washington, D.C. 20037
(202) 466-2396

December 10, 2007

GARY M. HOFFMAN
(Counsel of Record)
KENNETH W. BROTHERS
KIMBERLY R. PARKE
NICHOLAS A. GILLARD-BYERS
DICKSTEIN SHAPIRO LLP
1825 Eye Street, N.W.
Washington, DC 20006
(202) 420-2200

Counsel for Amicus Curiae

APPENDIX

APPENDIX [1]

Members of the Board of Directors Intellectual Property Owners Association

Marc S. Adler
Rohm and Haas Co.

Mark G. Bocchetti
Eastman Kodak Co.

Angelo N. Chaclas
Pitney Bowes Inc.

William J. Coughlin
Ford Global Technologies LLC

Timothy J. Crean
SAP AG

Mark W. Croll
Illinois Tool Works Inc.

Gerald V. Dahling
Sanofi-Aventis

Luke R. Dohmen
Boston Scientific Corp.

Kenneth D. Enborg
General Motors Corp.

Bart Eppenauer
Microsoft Corp.

Joseph T. FitzGerald
Symantec Corp.

Scott M. Frank
AT&T

Gary C. Ganzi
Siemens Water Technologies

Andy Gibbs
PatentCafe.com, Inc.

Michael L. Glenn
Dow Chemical Co.

Bernard J. Graves, Jr.
Eastman Chemical Co.

Gary L. Griswold
3M Innovative Properties Co.

John M. Gunther
EMC Corporation

Harry J. Gwinnell
Cargill, Incorporated

Jack E. Haken
Koninklijke Philips Electronics N.V.

Stephen D. Harper
Henkel Corp.

J. Jeffrey Hawley
IPO Immediate Past President

---

[1] IPO procedures require approval of positions in briefs by a three-fourths majority of directors present and voting.

William B. Heming
Caterpillar Inc.

Dennis R. Hoerner, Jr.
Monsanto Co.

Carl B. Horton
General Electric Co.

Philip S. Johnson
Johnson & Johnson

David J. Kappos
IBM Corp.

Charles M. Kinzig
GlaxoSmithKline

David J. Koris
Shell International B.V.

Noreen A. Krall
Sun Microsystems, Inc.

William C. Lee, III
Coca-Cola Co.

Richard J. Lutton, Jr.
Apple, Inc.

Kenneth M. Massaroni
Seagate Technology, LLC

Jonathan P. Meyer
Motorola, Inc.

Douglas K. Norman
Eli Lilly and Co.

Richard F. Phillips
ExxonMobil Corp.

Peter C. Richardson
Pfizer, Inc.

Mark L. Rodgers
Air Products & Chemicals, Inc.

Robert R. Schroeder
Mars Incorporated

Suzanne M. Shema
ZymoGenetics, Inc.

David Simon[2]
Intel Corp.

Russ Slifer
Micron Technology, Inc.

Brian W. Stegman
BASF Corp.

Brian K. Stierwalt
ConocoPhillips

Thierry Sueur
Air Liquide

James J. Trussell
BP America, Inc.

Michael Walker
DuPont

Stuart Watt
Amgen, Inc.

---

[2] As counsel for an interested party, Mr. Simon did not participate in the preparation, discussion, or vote on the brief.

56534 G

21pgs

FILED
DEC 10 2007
OFFICE OF THE CLERK
SUPREME COURT, U.S.

No. 06-937

In the Supreme Court of the United States

QUANTA COMPUTER, INC., ET AL,

Petitioners,

v.

LG ELECTRONICS, INC.,

Respondent.

ON A WRIT OF CERTIORARI TO THE UNITED STATES COURT OF APPEALS FOR THE FEDERAL CIRCUIT

BRIEF OF *AMICI CURIAE* INTERDIGITAL COMMUNICATIONS, LLC AND TESSERA, INC. IN SUPPORT OF RESPONDENT

KENNETH C. BASS, III
Counsel of Record
ROBERT G. STERNE
JON E. WRIGHT
STERNE, KESSLER,
GOLDSTEIN & FOX P.L.L.C.
1100 New York Avenue, NW
Washington, DC 20005
(202) 772-8825

December 10, 2007

BEST AVAILABLE COPY

TABLE OF CONTENTS

Page

Interest of the *Amici* 1

Summary of Argument 3

Argument 5

I. Separate Licensing of Components, Systems and Methods at Multiple Levels Is Consistent With The Patent Act and This Court's Precedents and is Essential to the Economic Health of the High Technology Industry 5

II. Modern Licensing in the High Tech Industry Often Uses Technology Transfer Agreements That Differ Substantially From Patent Licenses and Should Not be Seen as Raising Any Patent Exhaustion Issues, Regardless of the Decision in This Case 15

Conclusion 18

TABLE OF AUTHORITIES

Page

Cases

Case COMP/C-3/37,792, Microsoft, European Commission Decision March 24, 2004 7
Mazer v. Stein, 347 U.S. 201 (1954) 7

Statutes

35 U.S.C. § 1 *et seq* 5

Other Authorities

Antitrust Guidelines for the Licensing of Intellectual Property," U.S. Department of Justice and the Federal Trade Commission (April 6, 1995). 13
DW Carlton and M Waldman, *The Strategic Use of Tying to Preserve and Create Market Power in Evolving Industries*, 33 RAND JOURNAL OF ECONOMICS 194 (2002) 7
George Priest, "*What Economists Can Tell Lawyers About Intellectual Property*," 8 RES. LAW & ECON. 19 (J. Palmer & R. Zerbe, eds. 1986) 6
John M. Vernon & Daniel A. Graham, *Profitability of Monopolization by Vertical Integration* 79 J. POL. ECON. 924 (1971) 7
JP Choi and C Stefandas, *Tying, Investment and the Dynamic Leverage Theory*, 32 RAND JOURNAL OF ECONOMICS 52 (2001) 7
MD Whinston, *Tying, Foreclosure and Exclusion*, 80 AMERICAN ECONOMIC REVIEW 837 (1980) 7

No 06-937

In the Supreme Court of the United States

QUANTA COMPUTER, INC., ET AL,

Petitioners,

v.

LG ELECTRONICS, INC.,

Respondent

ON A WRIT OF CERTIORARI TO THE UNITED STATES COURT OF APPEALS FOR THE FEDERAL CIRCUIT

BRIEF OF *AMICI CURIAE* INTERDIGITAL COMMUNICATIONS, LLC AND TESSERA, INC. IN SUPPORT OF RESPONDENT

Interest of the *Amici*

This brief is filed with the consent of the parties[1] on behalf of InterDigital Communications,

[1] The parties' blanket letters of consent have been filed with the Clerk in compliance with Rule 37.3. This brief was not authored in whole or in part by counsel for any party. No person or entity other than the *amici* made a monetary contribution to the preparation or submission of this brief.

LLC, and its affiliates (together, "InterDigital") and Tessera, Inc. InterDigital Communications, LLC develops technology for the wireless communications industry. The company's roots date back to 1972 and it employs approximately 240 engineers. It derives much of its revenues from licensing its technology to companies that manufacture cellular telephones and other mobile terminal devices. InterDigital's licensees include Apple, LG, NEC, Sharp, Research in Motion, Ericsson, Nokia and Sony-Ericsson.

Tessera is a leading provider of miniaturization technologies for the electronics industry. Tessera enables new levels of miniaturization and performance by applying its unique expertise in the electrical, thermal and mechanical properties of materials and interconnects. Tessera's technologies are widely adopted in high-growth markets, including consumer, computing, communications, medical and defense electronics. More than 20 billion semiconductors worldwide incorporate Tessera's technology. Tessera presently has over 500 issued United States patents, over 360 pending US patents, and over 50 licensees in the area of computer chip packaging technology, including the world's top component companies such as Intel, Samsung, Micron, Sharp, Sony, Toshiba and Texas Instruments, as well as a number of universities. Tessera's ability to continue to innovate depends upon its ability to license its technology and enforce its patents.

Summary of Argument

The viability of high technology industries in today's global economy depends in significant part on the ability of innovators to employ flexible licensing strategies that in many instances require separate licenses for components, systems and methods at different levels of the manufacturing, distribution and retail chain in order to effectively capture the value of all the patented inventions that are incorporated into today's sophisticated products and services. Contrary to the suggestion of certain economists and some briefs in this case, it is neither feasible nor desirable to look to a single level of that chain for recovery of the full value of the intellectual property that covers an innovation. In some cases the flexible approach used in the high tech industry involves the licensing of different patents at different levels of the integration chain. In other cases the strategy involves only licensing of know-how or trade secrets at other levels of the chain and does not involve licensing of any patents. Such licenses may include covenants not to sue for patent infringement or other causes of action. These modern approaches and how they differ from the patent exhaustion scenarios that have been the subject of prior decisions of this Court, are the focus of this brief.

The Respondent has clarified what this case is – and is ***not*** – about. That clarification is consistent with the interests of the *amici* who are filing this brief in support of Respondent. Moreover, because there are significant legal and practical differences between patent licenses and technology transfer

agreements, these *amici* are filing this brief to illuminate those differences. The case before the Court is restricted to the effect of downstream conditions in traditional patent license arrangements and does not involve any consideration of the significantly different circumstances raised by modern technology transfer agreements, especially those involving distribution chains with multiple levels of integration. It is important to the high technology industry and U.S. industrial competitiveness that the Court's decision be based on an understanding of these very real and significant practical differences.

The Respondent's brief contains extensive discussion of the legal issues in this case. That brief correctly notes that the components sold to Quanta by Intel are not covered by the patents LG asserts against Quanta and this case is therefore not a case of traditional patent exhaustion. These *amici* and others similarly situated also have patents on certain components and other patents on systems and methods. As is the case with LG, these *amici* and others will on occasion license companies at the top of the manufacturing, distribution and retail chain under certain patents to make components, while licensing others lower in the chain to sell finished products that are covered by the claims of a different set of systems and method patents. None of these licensing scenarios are properly viewed as instances of patent exhaustion. The purpose of this brief is to provide the Court with a view of the market that these *amici* know from their business experience surviving and growing in a global economy. This brief will also explain the important

differences between patent licenses and modern technology transfer agreements, differences that are significant in the context of any opinion this Court may issue.

Argument

I. Separate Licensing of Components, Systems and Methods at Multiple Levels Is Consistent With The Patent Act and This Court's Precedents and is Essential to the Economic Health of the High Technology Industry

The Respondent has effectively shown that separate licensing of component patents and system patents at multiple levels of the manufacturing, distribution and retail chain is consistent with the Patent Act, 35 U.S.C. § 1 *et seq*, and this Court's precedents. (Resp. Br. at 17-39) *Amici* fully support those arguments and believe that the legal analysis employed by the Respondent should be accepted by the Court. Properly viewed this case does not present any issue of patent exhaustion.

Petitioner argues, in part, that its position should be adopted by the Court because it reflects rational economic behavior. Petitioner states, solely

on the basis of academic writings,[2] that "[a] rational patentee cannot obtain more by negotiating separately with the manufacturer, distributor, retailer and consumer than he could have obtained by charging the entire amount to the first party in the chain and relying on it to pass the cost along in the form of higher prices." (Pet. Br. at 49) That statement is based on a false assumption – that LG is trying to profit from the same patent at different levels of the manufacturing/distribution chain. LG has conclusively demonstrated its claims against Quanta are based on patents that are different than those that cover the components purchased by Quanta from Intel. In any event, that statement of "Chicago school" economic theory may perhaps be valid in a world where there are no transaction costs and where all parties have complete access to every other party's financial data, but it is inaccurate as a

---

[2] The *amici* question whether there is adequate empirical basis for assessing rational economic behavior in patent law. *See* George Priest, "*What Economists Can Tell Lawyers About Intellectual Property*," 8 RES. LAW & ECON. 19 (J. Palmer & R. Zerbe, eds. 1986) (stating that economic analysis of patent law is "one of the least productive lines of inquiry in all of economic thought" because of the severe limits inherent in theoretical models of innovation).

description of the real world,[3] particularly in cases where different patents are licensed at different levels. Petitioner's view totally ignores the value added by patented innovation at each level of the manufacturing and distribution chain and the right of the inventor to claim the innovation embodied in different patents at each level in order to capture the full economic value of the inventive contribution of the various patents – a principal endorsed by this Court.[4] Furthermore, licensors and licensees should enjoy freedom to contract as best suited to their businesses, as was done by LG and Intel in this case, as well as in the context of the various scenarios discussed in this brief. Limitations on that existing

---

[3] The Chicago school theory has been criticized by a number of other economists. *See, e.g.,* John M. Vernon & Daniel A. Graham, *Profitability of Monopolization by Vertical Integration* 79 J. POL. ECON. 924, 924-25 (1971); MD Whinston, *Tying, Foreclosure and Exclusion*, 80 AMERICAN ECONOMIC REVIEW 837 (1980); JP Choi and C Stefandas, *Tying, Investment and the Dynamic Leverage Theory*, 32 RAND JOURNAL OF ECONOMICS 52 (2001); DW Carlton and M Waldman, *The Strategic Use of Tying to Preserve and Create Market Power in Evolving Industries*, 33 RAND JOURNAL OF ECONOMICS 194 (2002). Chicago school economic theory was rejected by the European Commission in the Microsoft Antitrust case, Case COMP/C-3/37,792, Microsoft, European Commission Decision March 24, 2004 (http://ec.europa.eu/comm/competition/antitrust/cases/decisions/37792/en.pdf)

[4] *See Mazer v. Stein*, 347 U.S. 201, 219 (1954) (recognizing that "[t]he economic philosophy behind the clause empowering Congress to grant patents and copyrights is the conviction that encouragement of individual effort by personal gain is the best way to advance public welfare through the talents of authors and inventors in 'Science and useful Arts.'").

freedom can only diminish the competitiveness of our high tech industry in the increasingly competitive world market.

InterDigital, Tessera and other similarly-situated companies are engaged in businesses that function with a multi-level manufacturing and distribution chain. These companies operate at the top of that chain, inventing and refining fundamental technology used in the manufacture and packaging of small electronic and optical components including microprocessor chips and application-specific integrated circuits (ASICs). Their inventive breakthroughs often form the essential core of very valuable products and services that drive global consumer markets. Their innovations are typically technologies that are used by others and incorporated into electronic components or larger subsystems that ultimately become essential parts of a final electronic product or service.[5] Neither of the companies is currently a high volume manufacturer of products – they instead design electronic components such as semiconductor chips or packages for such components and create the technology needed for the manufacturing and packaging, such as the mask designs used by chip fabricators. Neither company's business model relies exclusively on the manufacturing of products to be sold to OEMs for integration into larger products ultimately sold to

---

[5] Further information about the companies can be found at their respective websites, http://www.interdigital.com and http://www.tessera.com

end users. Rather, both companies rely significantly on revenues obtained as a result of licensing their innovative technologies to manufacturers and assembly houses.

In an attempt to fully protect their innovations, *amici* sometimes obtain separate patents for the components and the systems or methods that incorporate those components into finished products, just as is the case in the LG/Intel/Quanta case before this Court. In other cases, however, these companies may obtain a single patent with separate apparatus, system and method claims. In either case, the key point is that the component claims or patents are distinct from the system and method claims and licensing of the components should not foreclose separate licensing of the systems or methods. In either case these licensing scenarios do not present the fact patterns that have been before this Court in its prior patent exhaustion cases and are therefore not subject to the exhaustion analysis urged by the Petitioner.

Although there are differences in the business models of Tessera and InterDigital and the products developed by each, both companies are in a position to take advantage of one or more of the licensing scenarios previously discussed. Both companies operate in a business environment that involves several different enterprises in the production of products. For example, a typical distribution chain for InterDigital and Tessera technology will be depicted as follows:

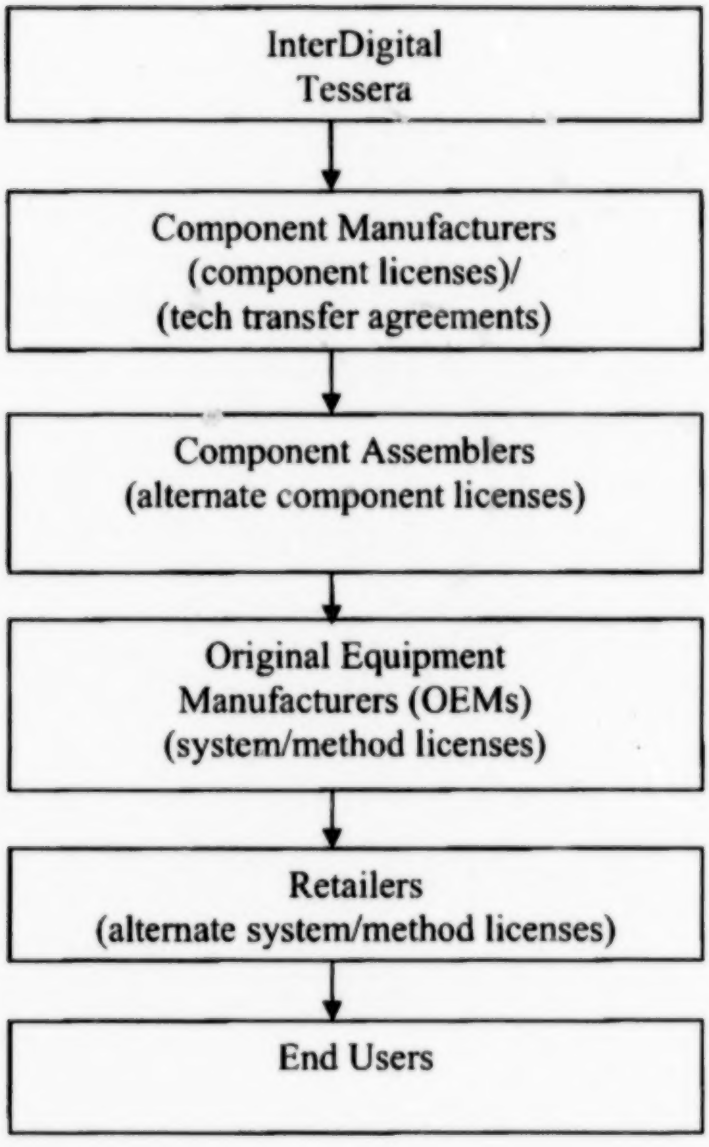

In such a typical multi-level chain that ultimately delivers products or services there are a few component manufacturers and assemblers, several OEMs and thousands to millions of end users, such as individual consumers who purchase a cellphone. Companies like these *amici* may enter into component licensing agreements with one or more component manufacturers or assemblers. They may then enter into separate agreements to license

other patents whose claims build on the components with several OEMs. They may also have system or method license agreements with retailers, which can include traditional consumer outlets or entities that incorporate the product into a larger consumer offering such as, in the case of InterDigital, a wireless network carrier. They do not have direct agreements with end-users because such agreements are impractical and contrary to the business model of the final entity that services the end user. As is the case with LG, the companies do not ordinarily assert claims against the customers of their licensees based on licensed components or products purchased by those customers.

Petitioner suggests that companies like InterDigital and Tessera can maximize their profits by licensing only the component manufacturers and having those companies pass along the costs of those licenses to the other distribution levels. That is a simplistic view of a very complicated technological reality and misses the point of this case – that a set of patents covering a component does not have the same value as a set of *different* patents that covers a system-level invention. Further, the suggestion reflects a lack of knowledge of the global economy in which *amici* must compete. In addition, it is a misconception that, by licensing only the component manufacturers, innovators of fundamental technologies can achieve a return on investment for their shareholders that will encourage future innovation. Petitioner's suggestion ignores the different business models and arrangements s that exist at the multiple points in the chain and the various levels of innovation that may take place at

each level. The suggestion also assumes – falsely – that the component manufacturers have access to the financial data of every downstream participant and can make rational business decisions based on the downstream economics. In some instances, the component manufacturers might be economically pressed by the downstream players to reduce costs of goods, leaving companies like *amici* to license the different technologies at various points of the chain to achieve their full economic return.

In the real world component manufacturers often operate under different business conditions, employ different production models and have different customers than OEMs and retailers. These economic realities mean that companies like InterDigital and Tessera need the flexibility to enter into licensing deals with different OEMs and retailers where the terms for similar products may vary significantly because of the different market positions that different OEMs or retailers occupy. Because of the multi-tiered nature of these markets, component manufacturers may not have dealings with or access to the OEMs and retailers who use the innovative technology of companies like InterDigital and Tessera.

More importantly, these component manufacturers often have no need for a license to the patents that encompass more than just the component they sell. Thus, they cannot "negotiate" on behalf of OEMs and retailers as the Chicago school economists suggest. In fact, such component manufacturers are in fierce competition with each other for sales to such OEMs and retailers and have no economic incentive whatsoever to obtain a fair

rate of return for entities such as the *amici*. InterDigital, Tessera and companies like them may therefore choose to enter into separate licensing agreements with the component manufacturers, OEMs and retailers for their separate technologies to obtain in the composite the fair rate of return required to sustain their business models. Often, those separate agreements enable these companies to realize the full value of the intellectual property encapsulating their innovative technologies. The rule advocated by Quanta that would grant downstream manufactures a "free ride" when they build on or incorporate parts licensed to component manufacturers would significantly limit the ability of these companies to realize the full economic potential of their creations, and reduce the incentive for further investment in innovation.

The real world experience of the *amici* is well reflected in the Department of Justice and the Federal Trade Commission's joint "Antitrust Guidelines for the Licensing of Intellectual Property."[6] In explicitly recognizing the "procompetitive benefits of licensing" the guidelines state that "[i]ntellectual property typically is one component among many in a production process and derives its value from its combination with complementary factors." Guidelines, § 2.3.

The guidelines further recognize that "[t]he owner of intellectual property has to arrange for its

---

[6] Antitrust Guidelines for the Licensing of Intellectual Property," U.S. Department of Justice and the Federal Trade Commission (April 6, 1995). These guidelines are available at http://www.usdoj.gov/atr/public/guidelines/0558.pdf.

combination with other necessary factors to realize its commercial value." *Id.* A flexible and robust licensing program "can facilitate integration of the licensed property with complementary factors of production" and "can be used to give a licensee an incentive to invest in the commercialization and distribution of products embodying the licensed intellectual property and to develop additional applications for the licensed property." *Id.* Finally, the guidelines explicitly recognize that the benefits of licensing restrictions "apply to patent, copyright, and trade secret licenses, and to know-how agreements." *Id.*

The patent exhaustion cases relied on by the Petitioner involve a sale of a patented item coupled with attempted restrictions on the sale or use of that item by downstream users. The Respondent has correctly pointed out that this case is substantially different and involves an assertion of different patents to prevent the unauthorized manufacture of systems and the use of methods covered by those separate patents. This Court should not upset the established freedom and flexibility of modern licensing contracts by extending the old precedents to cover modern business practices that sustain our economy. The decision of the Court of Appeals for the Federal Circuit in this case is sensitive to modern licensing realities and should be affirmed.

II. Modern Licensing in the High Tech Industry Often Uses Technology Transfer Agreements That Differ Substantially From Patent Licenses and Should Not be Seen as Raising Any Patent Exhaustion Issues, Regardless of the Decision in This Case

In some cases the form of licensing agreements in the high-tech industry will be patent licensing agreements like the one between LG and Intel at issue in this case. In many cases, however, the form of agreement will be significantly different.

The intellectual property of both InterDigital and Tessera consists only in part of patents.[7] Much of the value of the innovative and widely adopted wireless solutions and chip packaging technologies these companies invent comes in the form of circuit diagrams, layout specifications, component masks, process specifications, design tools, prototype systems, performance testing and results, software and technical know-how. The intellectual property that comprises the entire technological innovation package is sometimes protected as trade secrets or through copyright and not through patents. In order to enable component manufacturers to build the devices that incorporate this technology, it is necessary to expose and possibly transfer a wide scope of that intellectual

---

[7] InterDigital holds over 3,000 US and foreign patents and has over 9,000 patent applications pending. (http://www.interdigital.com/patents) Tessera has over 500 issued US patents and over 350 pending US applications.

property to them, and to train them in the use of the technology.

Companies like these *amici* often enable component manufacturers at the top of the chain to implement their technology through comprehensive technology transfer agreements which involve not only a transfer of, for instance, trade secret and other protected information, but often include an exchange of personnel to transfer know-how and assist in a successful implementation of the technology and operation of the facility and tools that are needed for such implementation. The consideration obtained for the transfer of the technology is just that – a technology transfer fee, and not a patent license fee. Thus, such consideration is in most cases based on the services to be provided by the licensor in transferring the technology (for example, payment for man-hours spent to transfer the licensor's technologies, in training employees of licensee, ensuring proper implementation of the technology, etc.) and not on a royalty associated with the sale of the components.

These agreements will often contain an explicit provision that they are not patent licenses. In order to assure the component manufacturer that it can manufacture the chips, the technology transfer agreement may also include a non-assertion provision that shields the component manufacturer from a patent infringement suit. This is a well established business practice sometimes utilized by participants in this global multi-tier product/service chain model to achieve fair rates of return for innovation. The component manufacturers, OEMs and retailers usually have far greater bargaining

power than *amici* and thus are in a better position to negotiate royalty rates that reflect the marketplace and ever changing commercial realities.

Technology transfer agreements have not been considered by the Court in any of the prior patent exhaustion cases. Because those agreements often are not tied to any sale of products or licensing of any patent, they would not fall under this Court's patent exhaustion precedents. There are obviously no post-sale restrictions based on patents in a technology transfer agreement that does not include any patent licenses. When no patent licenses are granted, there cannot be an issue of patent exhaustion. The rationale for patent exhaustion simply does not apply to technology transfer agreements that do not include patent licenses. Because of that fact, and because this case does not involve any such agreement, the Court should not render a decision that inadvertently implicates technology transfer agreements.

Conclusion

For the reasons stated in Respondent's Brief and this brief, the Court should affirm the judgment of the Court of Appeals for the Federal Circuit.

Respectfully submitted,

KENNETH C. BASS, III
Counsel of Record
ROBERT G. STERNE
JON E. WRIGHT
STERNE, KESSLER,
GOLDSTEIN & FOX P.L.L.C.
1100 New York Avenue, NW
Washington, DC 20005
(202) 772-8825

December 10, 2007

74 877c 19 44pgs

No. 06-937

IN THE

Supreme Court of the United States

QUANTA COMPUTER, INC., QUANTA COMPUTER USA, INC., Q-LITY COMPUTER, INC., COMPAL ELECTRONICS, INC., BIZCOM ELECTRONICS, INC., SCEPTRE TECHNOLOGIES, INC., FIRST INTERNATIONAL COMPUTER, INC. AND FIRST INTERNATIONAL COMPUTER OF AMERICA, INC.,

Petitioners,

v.

LG ELECTRONICS, INC.,

Respondent.

On Writ of Certiorari to the United States Court of Appeals for the Federal Circuit

BRIEF OF *AMICUS CURIAE* INTERNATIONAL BUSINESS MACHINES CORPORATION IN SUPPORT OF PETITIONERS

DAVID J. KAPPOS
MARIAN UNDERWEISER
WILLIAM P. SKLADONY
IBM CORPORATION
One North Castle Drive
Armonk, NY 10504
(914) 765-4343

JOHN D. FLYNN
IBM CORPORATION
11501 Burnet Road
Austin, TX 78758
(512) 838-2753

TRACI L. LOVITT
(Counsel of Record)
OGNIAN V. SHENTOV
SARAH E. LIEBER
JONES DAY
222 East 41st Street
New York, NY 10017
(212) 326-3939

MICHAEL A. CARVIN
JONES DAY
51 Louisiana Ave., N.W.
Washington, DC 20001
(202) 879-3939

Counsel for Amicus Curiae

WILSON-EPES PRINTING CO., INC. – (202) 789-0096 – WASHINGTON, D. C. 20002

QUESTION PRESENTED

Whether the Federal Circuit erred in holding that respondent's patent rights were not exhausted by Intel Corporation's sale of a product to petitioners, where Intel was authorized under a license to manufacture and sell the product, and the petitioners did not expressly consent to any restrictions on their use of the product.

TABLE OF CONTENTS

Page

QUESTION PRESENTED i

TABLE OF AUTHORITIES v

INTEREST OF *AMICUS CURIAE* 1

STATEMENT 3

SUMMARY OF THE ARGUMENT 6

ARGUMENT 10

I. PATENTEES MUST OBTAIN EXPRESS AGREEMENT TO PRESERVE THEIR PATENT RIGHTS AGAINST THOSE WHO PURCHASE FROM AUTHORIZED SELLERS 10

A. This Court's Precedents Establish A Strong Exhaustion Doctrine That Applies With The Authorized Sale Of A Good With No Substantial Non-Infringing Use 10

B. An Exception To Exhaustion Exists Where Parties Agree To Limit The Purchaser's Rights Under The Patent Through Express Restrictions That Are Otherwise Valid Under Federal Law 14

TABLE OF CONTENTS
(continued)

Page

1. This Court has repeatedly recognized the patentee's ability to restrict licensees and their downstream purchasers through valid licensing restrictions 14

2. The Court's precedents compel the conclusion that patentees can restrict *purchasers*, but only through written agreements to which the purchasers expressly consent 18

C. A Rule Permitting Express Restrictions On Purchasers Fulfills The Goals Of Patent Law And The Exhaustion Doctrine 23

D. Applying These Principles Requires Reversal Of The Federal Circuit's Decision 26

E. The Federal Circuit's Decision Undermines The Doctrine Of Contributory Infringement 28

TABLE OF CONTENTS
(continued)

Page

II. A CONTRARY RULE THAT WOULD ENFORCE NONE OR ALL PURPORTED RESTRICTIONS ON THOSE WHO PURCHASE FROM AUTHORIZED SELLERS WOULD DISRUPT THE PATENT SYSTEM'S CAREFUL BALANCE 30

A. Adopting The Federal Circuit's Rule Would Have Significant And Immediate Detrimental Economic Impacts 30

B. An Alternative Rule Precluding Restrictions On Purchasers Would Over-Expand The Exhaustion Doctrine To The Detriment Of Innovation 32

CONCLUSION 35

TABLE OF AUTHORITIES

Page

Cases

Adams v. Burke,
84 U.S. 453 (1873) 10, 11, 20, 25
Aro Mfg. Co. v. Convertible Top Replacement Co., 377 U.S. 476 (1964) 29
Bandag, Inc. v. Al Bolser's Tire Stores, Inc.,
750 F.2d 903 (Fed. Cir. 1984) 34
Bloomer v. Millinger, 68 U.S. 340 (1863) .. 10, 14, 24
Bonito Boats, Inc. v. Thunder Craft Boats, Inc., 489 U.S. 141 (1989) 7, 23
Brulotte v. Thys Co., 379 U.S. 29 (1964) 17
College Sav. Bank v. Fla. Prepaid Postsecondary Educ. Expense Bd.,
527 U.S. 666 (1999) 22
Cont'l T.V., Inc. v. G.T.E. Sylvania, Inc.,
433 U.S. 36 (1977) 17
Festo Corp. v. Shoketsu Kinzoku Kogyo Kabushiki Co., Ltd., 535 U.S. 722 (2002) 25
Gen. Talking Pictures Corp. v. W. Elec. Co.,
305 U.S. 124 (1938) 8, 9, 14, 15, 16, 18, 22
Henry v. A.B. Dick Co., 224 U.S. 1 (1912), *overruled on other grounds by Motion Picture Patents Co. v. Universal Film Mfg. Co.*, 243 U.S. 502, 517 (1917) 12
Hobbie v. Jennison, 149 U.S. 355 (1893) 11
Ill. Tool Works Inc. v. Indep. Ink, Inc.,
547 U.S. 28 (2006) 20, 28
Int'l Salt Co. v. United States,
332 U.S. 392 (1947) 16
Johnson v. Zerbst, 304 U.S. 458 (1938) 21
Keeler v. Standard Folding Bed Co.,
157 U.S. 659 (1895) 10, 19

TABLE OF AUTHORITIES
(continued)

Page

Markman v. Westview Instruments Inc., 517 U.S. 370 (1996) 25
Mentor H/S, Inc. v. Med. Device Alliance, Inc., 244 F.3d 1365 (Fed. Cir. 2001) 34
Mitchell v. Hawley, 83 U.S. (16 Wall.) 544 (1873) 8, 16, 22
Monsanto Co. v. McFarling, 488 F.3d 973 (Fed. Cir. 2007), *petition for cert. filed*, 76 U.S.L.W. 3081 (No. 07-241, Aug. 22, 2007) 34
Motion Picture Patents Co. v. Universal Film Mfg Co., 243 U.S. 502 (1917) 17, 20, 28
Patterson v. Illinois, 487 U.S. 285 (1988) 21
Providence Rubber Co. v. Goodyear, 76 U.S. (9 Wall.) 788 (1869) 14
Schneckloth v. Bustamonte, 412 U.S. 218 (1973) 21
Sony Corp. of Am. v. Universal Studios, Inc., 464 U.S. 417 (1984) 23
United States v. Gen. Elec. Co., 272 U.S. 476 (1926) 8, 15, 22
United States v. Line Material Co., 333 U.S. 287 (1948) 17
United States v. Univis Lens Co., 316 U.S. 241 (1942) 10, 12, 13
Zenith Radio Corp. v. Hazeltine Research, Inc., 395 U.S. 100 (1969) 17

TABLE OF AUTHORITIES
(continued)

Page

Statutes, Codes & Rules

35 U.S.C. § 154(a) 10
35 U.S.C. § 271(c) 29
U.C.C. § 2-702(2) 28
Sup. Ct. R. 37.3 1
Sup. Ct. R. 37.6 1

Miscellaneous

Mark A. Lemley, *Ten Things to do About Patent Holdup of Standards (And One Not To)*, 48 B.C. L. REV. 149 (2007) 31
Mark A. Lemley & Carl Shapiro, *Patent Holdup and Royalty Stacking*, 85 U. TEX. L. REV. 1991 (2007) 31
Roger M. Milgrim, MILGRIM ON LICENSING (2007) 11, 12, 17, 19, 33
John W. Schlicher, PATENT LAW, LEGAL AND ECONOMIC PRINCIPLES (2d ed. 2006) 18
William P. Skladony, *Commentary on Select Patent Exhaustion Principles In Light of The LG Electronics Cases*, 47 IDEA 235 (2007) 12
U.S. Dep't of Justice and Federal Trade Comm'n, ANTITRUST GUIDELINES FOR THE LICENSING OF INTELLECTUAL PROPERTY 5 (1995), *reprinted in* Trade Reg. Rep. (CCH) ¶ 13,132 (Apr. 6, 1995) 33
U.S. Patent & Trademark Office, PATENTING BY ORGANIZATIONS 2006 (March 2007) 1

TABLE OF AUTHORITIES
(continued)

Page

Katherine E. White, *A Rule for Determining When Patent Misuse Should Be Applied*, 11 FORDHAM INTELL. PROP. MEDIA & ENT. L.J. 671 (2001) 16, 19

International Business Machines Corporation ("IBM") respectfully submits this brief pursuant to Supreme Court Rule 37.3 in support of petitioners.[1] IBM urges the Court to apply its longstanding precedents and reverse the judgment of the United States Court of Appeals for the Federal Circuit.

INTEREST OF *AMICUS CURIAE*

IBM has a strong interest in an evenhanded and fair interpretation of patent law, as it is both a patentee and a manufacturer. IBM is well known as a strong proponent of the U.S. patent system. It has received tens of thousands of patents, has been awarded more United States patents than any other assignee for fourteen consecutive years,[2] and earns about $1 billion every year from licensing its

---

[1] Pursuant to Supreme Court Rule 37.6, IBM states that no counsel for a party authored this brief in whole or in part, and no counsel or party made a monetary contribution intended to fund the preparation or submission of this brief. No person other than *amicus curiae*, its members, or its counsel made a monetary contribution to its preparation or submission. In addition, all parties have consented to the filing of this *amicus* brief, and their consent letters are on file with the Clerk's Office.

[2] For example, the United States Patent and Trademark Office reported that in 2006, IBM received 3,621 patents, which is over 1,170 more United States patents than any other company. *See* United States Patent & Trademark Office, PATENTING BY ORGANIZATIONS 2006 (March 2007), *available at* http://www.uspto.gov/go/taf/topo_06.pdf (last visited Nov. 9, 2007).

intellectual property portfolio. But, IBM also earns over $90 billion from sales of information technology equipment and services annually and thus defends against many adverse patent accusations and lawsuits each year.

With respect to the specific question presented, IBM is unusually well-positioned to provide unbiased commentary on how the rule of exhaustion should justly limit patentees' exclusive rights without harming innovation or the public interest. IBM has no direct stake in the particular dispute between petitioners and respondent, because it is licensed to the patents at issue in this case. In addition, IBM is not inclined to favor licensees and purchasers over patent owners, or vice versa. As one of the most successful licensors of patented technology in the world, IBM relies on its ability to enforce its patents in order to advance its business interests. But, as a large corporation focused on offering innovative products and services in a broad range of fields, IBM is frequently forced to defend against charges of infringement.

IBM is also well aware of the exhaustion issues that arise not only in the information technology sector but also in a broad spectrum of different industries, all of which would be impacted by changes to the doctrine. IBM's business interests encompass a diverse range of industries and fields that enable, and are enabled by, information technology, including software and computer technology, electrical engineering, life sciences, physical and organic chemistry, business consulting, computer services, engineering services, and the mechanical arts.

IBM thus has a strong interest in maintaining a fair patent system, and in fashioning clear and evenhanded rules of exhaustion that promote innovation in all industries, while properly balancing the interests of the patent owner, the accused infringer, and the public, rather than favoring any particular party.

STATEMENT

1. Respondent owns a portfolio of U.S. and foreign patents relating to personal computers, including patents claiming systems and methods to increase the bandwidth efficiency of computer systems. Pet. App. 2a. Intel Corporation ("Intel") is authorized by respondent to manufacture and sell microprocessors and chipsets that otherwise would infringe respondent's patents. Pet. App. 2a-3a. Petitioners purchase chipsets and microprocessors from Intel and combine them with other equipment in accordance with exact specifications from Intel to make computers. *See id.*; Pet. 3. By necessity, microprocessors and chipsets must be combined with these other computer components to be of any use. *See* Opp. 9.

2. Two agreements between respondent and Intel govern Intel's ability to manufacture and sell the chipsets and microprocessors at issue here.

The first is a patent license (the "License Agreement") by which Intel agreed to pay respondent for the unrestricted right to "make, use, sell (directly or indirectly), offer to sell, import and otherwise dispose of" microprocessors and chipsets. Pet. App. 33a (citation omitted). The License Agreement also provides that "[n]otwithstanding anything to the contrary contained in this Agreement, the parties

agree that nothing herein shall in any way limit or alter the effect of patent exhaustion that would otherwise apply when a party hereto sells any of [the licensed products]." Pet. at 3-4.

The second relevant agreement is the "Master Agreement." *Id.*; Opp. 3. It incorporates the License Agreement by reference and provides: "' [respondent] and Intel intend and acknowledge that [respondent's] grant of a license to Intel for Integrated Circuits . . . shall not create any express or implied license under [respondent's] patents to computer system makers [such as petitioners] that combine Intel Integrated Circuits with other non-Intel components to manufacture motherboards, computer subsystems, and desktop, notebook and server computers'." Opp. 6 (quoting Master Agreement § 2). The Master Agreement provides that Intel will send a notice to its customers stating, in pertinent part, that Intel has a "broad patent license" from respondent that "ensures that any Intel product that you purchase is licensed by [respondent] and thus does not infringe any patent held by [respondent]." Opp. 7 (internal quotation marks omitted). The notice further states: "Please note however that while the patent license that [respondent] granted to Intel covers Intel's products, it does not extend, expressly or by implication, to any product that you may make by combining an Intel product with any non-Intel product." *Id.* (citation omitted).

3. It is undisputed that petitioners received the required notice from Intel before purchasing some of the components at issue. *See id.*; Reply Br. 9. Petitioners thereafter simply combined the chips with other non-Intel products pursuant to Intel's

exact specifications. Pet. 3. Petitioner's computers were then sold in the U.S. and around the world.

4. Between late 2000 and spring 2001, respondent brought separate suits against petitioners, alleging that they (and another company with whom respondent has since settled) had infringed six of respondent's patents. Specifically, respondent claimed that, while Intel's manufacture of the infringing chipsets was authorized under the License Agreement, petitioners' combination of those chipsets with non-Intel products was not. *See* Pet. App. 3a. On August 20, 2002, the district court granted petitioners' motion for partial summary judgment of non-infringement on the ground that respondent's unrestricted license to Intel and Intel's subsequent sale of the chipsets and microprocessors to petitioners exhausted respondent's rights to recover royalties with respect to those items. Pet. App. 32a-45a.

5. In the proceedings below, the Federal Circuit reversed. In its view, exhaustion occurs only where there is an "unconditional" sale such that "the patentee has bargained for, and received, an amount equal to the full value of the goods." Pet. App. 5a (internal quotation marks and citation omitted). But when a sale is "conditional," the Federal Circuit reasoned, "the parties negotiat[e] a price that reflects only the value" of those limited rights and thus the patent rights might not be fully exhausted. *Id.*

The Federal Circuit concluded that no exhaustion had occurred under this rule because the Master Agreement "expressly disclaims [Intel's right to] grant[] a license allowing computer system manufacturers to combine Intel's licensed parts with

other non-Intel components. Moreover, this conditional agreement required Intel to notify its customers of the limited scope of the license, which it did. Although Intel was free to sell its microprocessors and chipsets, those sales were conditional, and Intel's customers were expressly prohibited from infringing [respondent's] combination patents." Pet. App. 6a. The unilateral notice was binding on petitioners and conditioned the sale, in the Federal Circuit's view, due to New York Uniform Commercial Code § 2-202, "the battle of the forms" provision, which provides that a contract may be "supplemented by consistent additional terms unless the writing is intended to be complete and exclusive." *Id.*

SUMMARY OF THE ARGUMENT

This case presents a unique challenge to maintaining balance and fairness in the patent exhaustion doctrine because the facts are so extreme. Respondent expressly authorized Intel to manufacture and sell chipsets and microprocessors that had only one purpose, to be combined with other components and made into computers. Respondent required only that Intel notify its customers—petitioners—that they were not authorized to combine the chipsets and microprocessors with non-Intel products. Intel gave this unilateral notice to petitioners but also provided detailed and exact specifications on how to make the infringing combination.

In light of these unique facts, it is tempting to reach an extreme result and conclude, like the Federal Circuit, that *any* condition on a sale, including a unilateral notice to a purchaser, can overcome exhaustion or conclude, like other *amici* are

bound to suggest, that restrictions on downstream purchasers are *never* valid where a sale is authorized and the sold article has no substantial noninfringing use.

But, patent law and policy should not be defined to operate so starkly. Indeed, any pronouncements in the patent field must take into account the delicate balance between promoting innovation and promoting competition that is necessary for a functional patent system. *See Bonito Boats, Inc. v. Thunder Craft Boats, Inc.*, 489 U.S. 141, 156 (1989). In the exhaustion context, this balance means that the point at which patent rights terminate must be fairly and clearly defined. An overly-broad exhaustion doctrine, one that terminates patent rights too easily, would undercut the incentive to innovate. But an overly-narrow doctrine, one that entitles patentees to recover multiple royalties for the same infringement, would allow patentees to over-leverage their patents to the detriment of the public and undercut the incentive for follow-on innovation and commercialization. And, a doctrine that requires judicial resolution to determine whether exhaustion has occurred would fail to provide the certainty necessary for commerce to function efficiently.

As IBM explains, this Court's jurisprudence and the policies underlying exhaustion require a rule that lies between the extremes: while an authorized sale of a product with no substantial non-infringing use exhausts the patent right, the licensee or downstream purchaser can expressly agree to restrictions that would overcome exhaustion with respect to restricted activities, so long as those restrictions do not violate the federal antitrust laws,

misuse or expand the patent right, or otherwise constitute an invalid restraint. As this Court has recognized, exhaustion is a strong doctrine that terminates the patentee's rights via an authorized sale of a patented article with no substantial non-infringing use. But, just as a patentee can control its own sales of a patented article, it can restrict the authority of licensees through effective licensing agreements. It can also restrict the rights of purchasers through express agreements. Because purchasers are legally entitled to rely on the exhaustion effect of an authorized sale, however, the latter restrictions should be enforceable only if the purchaser expressly consents and agrees to them. Any alternative rule would upset the settled commercial expectations of those who purchase patented articles from patentees or their authorized sellers.

IBM's interpretation of the enforceability of restrictions on purchasers is a direct outgrowth of this Court's jurisprudence. The Court has repeatedly recognized that patentees may issue restrictive licenses limiting a licensee's authority and that a licensee's sale or other action outside the scope of its restricted license constitutes infringement, exposing the licensee and everyone downstream to strict liability for infringement. *See Mitchell v. Hawley*, 83 U.S. (16 Wall.) 544, 548 (1873); *United States v. Gen. Elec. Co.*, 272 U.S. 476, 490 (1926). Thus, the Court has held that a patentee can avoid exhaustion and restrict licensees and downstream purchasers by defining *unauthorized* conduct in a licensing agreement. *See Gen. Talking Pictures Corp. v. W. Elec. Co.*, 305 U.S. 124, 126 (1938).

The same reasoning applies in the context of an *authorized* sale by a licensee or the patentee. Just as a patentee can place restrictions on a licensee selling patented products, it can place restrictions on a purchaser of such products through express agreements with the purchaser. Where those restrictions limit the purchaser's rights under the patent, they give rise to a claim of infringement liability for activities by the purchaser outside the restrictions. *See id.* Because such restrictions are contrary to the normal operation of patent exhaustion and the expectations of the purchaser, however, they must be the result of an agreement to which the purchaser has expressly consented. Otherwise, the restrictions are insufficiently clear to demonstrate that the bargained-for sale of the patented product was for less than the full rights under the patent.

IBM's interpretation of exhaustion is not only consistent with this Court's jurisprudence but necessary to effect the basic balance underlying the patent system. The fundamental point of exhaustion is that the patentee can be compensated only once for the same infringement; it gets one bite at the apple. But, this Court has long permitted the patentee to divide that bite into smaller nibbles. So long as a licensee or a purchaser expressly agrees that it is restricted to make, use or sell only the smaller nibble, enforcing the restriction is fair, allows the patentee to receive only partial compensation commensurate with the restricted rights granted, and promotes competition by allowing the patentee to offer an array of different rights under the patent at varying valuations. The purchaser benefits from this regime,

as it can obtain at a lower price only the rights it needs, certain of the rights it has purchased.

ARGUMENT

I. PATENTEES MUST OBTAIN EXPRESS AGREEMENT TO PRESERVE THEIR PATENT RIGHTS AGAINST THOSE WHO PURCHASE FROM AUTHORIZED SELLERS.

A. This Court's Precedents Establish A Strong Exhaustion Doctrine That Applies With The Authorized Sale Of A Good With No Substantial Non-Infringing Use.

It is well established that patent law grants to the patent holder the "right to exclude others from making, using, offering for sale, or selling the invention." 35 U.S.C. § 154(a). But, it is also well established that "when the patentee, or the person having his rights, sells a machine or instrument whose sole value is in its use, he receives the consideration for its use and he parts with the right to restrict that use. The article, in the language of the court, passes without the limit of the monopoly." *Adams v. Burke*, 84 U.S. 453, 456 (1873); *see United States v. Univis Lens Co.*, 316 U.S. 241, 249-50 (1942); *Keeler v. Standard Folding Bed Co.*, 157 U.S. 659, 664 (1895); *Bloomer v. Millinger*, 68 U.S. 340, 351-52 (1863). This rule of patent exhaustion was stated by the Court over one hundred years ago as follows:

> [T]he patentee or his assignee having in the act of sale received all the royalty or consideration which he claims for the use of his invention in that particular

> machine or instrument, it is open to the use of the purchaser without further restriction on account of the monopoly of the patentees.

Adams v. Burke, 84 U.S. at 456; *see also* 1 Roger M. Milgrim, MILGRIM ON LICENSING § 2.30, at 2-64 n.161 (2007) ("[W]hen an authorized licensee exercises the licensed right to make, use and sell a patented product the patentee's patent rights in the product are exhausted upon that sale.").

Thus, in *Adams v. Burke*, the Court affirmed the dismissal of an infringement action against a downstream purchaser in a case involving a patent on improvements to coffin lids where the patentee had authorized the manufacture and sale of infringing coffins but only within a ten-mile radius of Boston. 84 U.S. at 456-57. The infringing coffin was sold, without restriction, within this geographic area but then used by the purchaser outside of the restricted area. *Id.* The Court reasoned that although the right "to manufacture, to sell, and to use these coffin-lids was limited to the circle of ten miles around Boston, . . . a purchaser . . . of a single coffin acquired the right to use that coffin for the purpose for which all coffins are used. That so far as the use of it was concerned, the patentee had received his consideration, and it was no longer within the monopoly of the patent." *Id.* at 456; *see also Hobbie v. Jennison*, 149 U.S. 355, 363 (1893) (holding licensee was not a contributory infringer in selling an item to one who made an infringing combination, "because he had a right, under the patent, to make, use, and vend the patented article in the state of Michigan, and the article was lawfully made and sold

there. The pipes in question were not sold by the Hartford Steam Company in Connecticut, but were merely used there, and necessarily perished in the using").

Similarly, in *Univis Lens*, a case involving patents on multifocal lenses, the Court invalidated under the Sherman Act a price maintenance program effected through a patentee's licensing program with wholesalers and finishing retailers that would purchase lens blanks from the patentee and grind them into a prescription. In doing so, the Court reasoned, "where one has sold an uncompleted article which, because it embodies the essential features of his patented invention, is within the protection of his patent, and has destined the article to be finished by the purchaser in conformity to the patent, he has sold his invention so far as it is or may be embodied in that particular article." 316 U.S. at 250-51; *see also* William P. Skladony, *Commentary on Select Patent Exhaustion Principles In Light of The LG Electronics Cases*, 47 IDEA 235, 236-40 (2007) (discussing this Court's exhaustion jurisprudence).

Because an article that "embodies the essential features" of a patented invention generally has no substantial alternative use that would be non-infringing, the rule of exhaustion has alternatively been described as "where a patented apparatus or product has no use other than an infringing use, its sale to a third party . . . exhausts the patent." MILGRIM, *supra*, § 2.30, at 2-64 n.161; *see Henry v. A.B. Dick Co.*, 224 U.S. 1, 48 (1912), *overruled on other grounds by Motion Picture Patents Co. v. Universal Film Mfg. Co.*, 243 U.S. 502, 517 (1917) ("[A] sale of an article which, though adapted to an

infringing use, is also adapted to other and lawful uses, is not enough to make the seller a contributory infringer. Such a rule would block the wheels of commerce."). Although the essential features doctrine and the concept of substantial non-infringing use are distinct, the alternative descriptions of the exhaustion test are, for all intents and purposes, identical in effect.

The upshot of these precedents is a strong exhaustion doctrine—one that applies on the authorized sale of a patented item with no substantial non-infringing use. [3]

---

[3] In the proceedings below, the Federal Circuit concluded that an authorized sale does not exhaust "method" patents—patents that disclose and claim a process, whether a technical process or a method of doing business. *See* Pet. App. 6a (holding that "the sale of a device does not exhaust a patentee's rights in its method claims"). In IBM's view, this conclusion is clearly contrary to the Court's decision in *Univis Lens*, in which the patent found to be exhausted by an authorized sale was a method patent. *See* 316 U.S. at 246-47 (describing the patents at issue). A contrary rule, moreover, would effectively eliminate the exhaustion doctrine because patentees would simply include method or process claims to avoid exhaustion. In the information technology context in particular, a contrary rule would harm the public interest, since it is often the unsuspecting end user or consumer who is practicing a method claim by simply using a computer.

B. An Exception To Exhaustion Exists Where Parties Agree To Limit The Purchaser's Rights Under The Patent Through Express Restrictions That Are Otherwise Valid Under Federal Law.

While the Court has recognized a strong exhaustion doctrine, it has also recognized, for over a century, an exception to exhaustion where there is an express agreement limiting the licensee's or purchaser's rights under a patent. In short, the Court has recognized the patentee's ability to grant less than the full patent right, and a licensee's or purchaser's freedom to contract for the purchase of a lesser right at a lower price.

1. This Court has repeatedly recognized the patentee's ability to restrict licensees and their downstream purchasers through valid licensing restrictions.

The law permits a patentee to "carve out of his entire monopoly such fractional interest therein, either as to absolute right, or as to territorial extent, or as to duration of right, as he may see fit" and transfer only that limited right. *Bloomer*, 68 U.S. at 346; *see also Providence Rubber Co. v. Goodyear*, 76 U.S. (9 Wall.) 788, 799-800 (1869) (upholding the validity of a restricted license). Indeed, as this Court has recognized, "[t]he practice of granting licenses for a restricted use is an old one. So far as appears, its legality has never been questioned." *Gen. Talking Pictures Corp.*, 305 U.S. at 127 (internal citations omitted).

Consistent with this Court's recognition of the patentee's ability to grant licenses of limited scope,

the Court has held that exhaustion does *not* apply when a licensee makes an unauthorized sale outside the scope of its patent license. Thus, in *United States v. General Electric Company*, the Court held that the owner of patents relating to tungsten incandescent lamps could validly impose conditions in a licensing agreement that restricted the licensee's ability to sell electric lamps covered by the patent. *See* 272 U.S. at 489. The Court reasoned that, while it was well settled that exhaustion occurs "where a patentee makes the patented article, and sells it" without restriction, "the question is a different one which arises when we consider what a patentee who grants a license to one to make and vend the patented article may do in limiting the licensee in the exercise of the right to sell." *Id.* at 489-90. In the licensing context, the Court continued, "[t]he patentee may make and grant a license to another to make and use the patented articles but withhold his right to sell them. The licensee in such a case acquires an interest in the articles made. He owns the material of them and may use them. But if he sells them he infringes the right of the patentee, and may be held for damages and enjoined." *Id.* at 490.

Similarly, in *General Talking Pictures Corp.*, 305 U.S. 124, the Court upheld an infringement action against a licensee and downstream purchaser where the licensee was authorized to sell the patented article (amplifiers) in only a certain "field of use" (for radio reception) but sold the patented article for a different use (for theater motion-picture machines). *Id.* at 125-26. The Court reasoned that the validity and legality of the restrictive license was "clear." *Id.* at 127. "As the restriction was legal and the amplifiers were made and sold outside the scope of

the license, the effect is precisely the same as if no license whatsoever had been granted to [the licensee]." *Id.*

Indeed, this Court has made clear that where a licensee has made an unauthorized sale outside the scope of its license, the downstream purchaser infringes even if it lacks notice that the licensee is acting in an unauthorized manner. The reason, in the Court's view, is that one "who buys goods from one not the owner, and who does not lawfully represent the owner, however innocent [he] may be, obtain[s] no property whatever in the goods, as no one can convey in such a case any better title than he owns, unless the sale is made in market overt, or under circumstances which show that the seller lawfully represented the owner." *Mitchell*, 83 U.S. at 550. "Notice to the purchaser in such a case is not required, as the law imposes the risk upon the purchaser, as against the real owner, whether the title of the seller is such that he can make a valid conveyance." *Id.* Any other rule would defeat the well-settled principle that "[r]estrictions on patent rights travel downstream." Katherine E. White, *A Rule for Determining When Patent Misuse Should Be Applied*, 11 FORDHAM INTELL. PROP. MEDIA & ENT. L.J. 671, 693 (2001).

To be sure, the Court has recognized numerous limits on the ability of the patentee to impose downstream restrictions. Most obvious, the patentee cannot impose any restrictions that would otherwise violate the federal antitrust laws. *See Int'l Salt Co. v. United States*, 332 U.S. 392 (1947) (invalidating restriction that would have violated anti-tying provisions of Sherman and Clayton Acts); *United*

States v. Line Material Co., 333 U.S. 287, 304 (1948) (holding that notwithstanding *General Electric*, it is unlawful to use patents "as a peg upon which to attach contracts with former or prospective competitors, touching business relations other than the making and vending of patented devices").

In addition, the patentee cannot misuse or expand its patent right. "The patent law simply protects [the patentee] in the monopoly of that which he has invented and described in the claims of his patent." *Motion Picture Patents Co. v. Universal Film Mf'g Co.*, 243 U.S. 502, 510 (1917). Thus, the Court has held that the patentee cannot lawfully negotiate to obtain "royalty payments beyond the life of the patent," because doing so "is analogous to an effort to enlarge the monopoly of the patent." *Brulotte v. Thys Co.*, 379 U.S. 29, 33 (1964); *see also Zenith Radio Corp. v. Hazeltine Research, Inc.*, 395 U.S. 100, 136 (1969) (observing that the patentee cannot "extend the monopoly of his patent to derive a benefit not attributable to use of the patent's teachings").

Apart from these limits imposed by antitrust and patent misuse principles, the authority of the patentee to impose downstream restrictions, such as field-of-use, geographical, and other such restrictions, through effective licensing is well established. *See, e.g.*, MILGRIM, *supra*, § 2.31; *see also Cont'l T.V., Inc. v. G.T.E. Sylvania, Inc.*, 433 U.S. 36 (1977) (holding that non-price, vertical resale restrictions are *not* per se violations of the Sherman Act and are judged under the rule of reason).

2. The Court's precedents compel the conclusion that patentees can restrict *purchasers*, but only through written agreements to which the purchasers expressly consent.

While *General Talking Pictures* arose in the context of the validity and downstream impact of restrictions in licensing agreements, it supports the principle that a patentee can validly impose restrictions on a purchaser's ability to use a patented article. That is, in *General Talking Pictures*, the Court held that field-of-use-restrictions are lawful and valid. And "[i]f the purchaser in *General Talking Pictures* is liable for infringement when he sells outside of the known limited field of the authority of his supplier, it would seem logical that an identical express license restriction on his rights made at the time of sale would be lawful." *See* 2 John W. Schlicher, PATENT LAW, LEGAL AND ECONOMIC PRINCIPLES § 8:61 (2d ed. 2006).

In other words, had the licensee in *General Talking Pictures* complied with the terms of the licensing agreement, the purchasers would have had only the limited right to use the amplifiers in radios; their use in a different field would have exceeded the scope of the right the licensee had to sell and thus the right the purchaser had to purchase. The decision thereby necessarily approved of the patentee's ability to impose field-of-use restrictions on purchasers. For this reason, treatises in the patent licensing arena warn that "not every purchase provides a free ticket to future use because certain countervailing doctrines may defeat exhaustion: notably, whether there are

still any valid field-of-use restrictions." MILGRIM, *supra*, § 2.31, at 2-66-2-67; *see also id.* §§ 2.31-2.36 (describing the various permissible restrictions).

While this Court has not directly considered the mechanisms by which a patentee can restrict purchasers involved in an *authorized* sale—a sale by the patentee or a licensee acting within the scope of its license—numerous of the Court's precedents, read as a body of law, make clear that field-of-use, geographical and other restrictions on such purchasers (i) are enforceable when the restrictions are contained in a written agreement to which the purchaser has expressly consented, and (ii) can be enforced against only those bound by the contractual agreement. In other words, the restrictions do not automatically carry downstream with an authorized sale. *See* White, *supra*, at 694. ("[A] patent owner may place conditions on a sale of a patented product through contract, but such restrictions should apply only to those in privity of contract. Generally, only those who are in privity of contract, with the exception of intended beneficiaries, may sue on a contract.") (footnotes omitted).

Specifically, the Court has recognized that the patentee can limit the purchaser "by special contracts brought home to the purchasers." *Keeler*, 157 U.S. at 666. Although the issue was not before the Court, it observed that "[i]t [was] obvious that such a question would arise as a question of contract, and not as one under the inherent meaning and effect of the patent laws." *Id.* Thus, a purchaser can contractually agree to restrictions on its rights under a patent that it would normally enjoy by virtue of an authorized sale. Having contractually agreed to restrictions that

modify the normal operation of exhaustion, the purchaser would be liable for infringement if it used the article outside the scope of its restricted right. Because the patentee's right to sue for infringement in this instance arises only as a result of a contract, however, the restriction would not travel downstream upon a subsequent authorized sale absent a further express agreement restricting the subsequent purchaser.

Where a patentee has attempted to control a direct purchaser engaged in an authorized sale through something less than an expressly agreed-to contractual arrangement, for example through a unilateral notice affixed to the side of the patented article, the attempt has been held invalid. *See, e.g.*, *Motion Picture Patents Co.*, 243 U.S. at 518-19. The Court has held that there is "no support in the patent laws for the proposition that a patentee may prescribe by notice attached to a patented machine the conditions of its use and the supplies which must be used in the operation of it, under pain of infringement of the patent," where there has been an authorized sale. *Ill. Tool Works Inc. v. Indep. Ink, Inc.*, 547 U.S. 28, 38 (2006) (internal quotation marks omitted).

In addition, the Court has previously invalidated *implied* restrictions on purchasers engaged in an *authorized* sale. It has held that, after an authorized sale, "there is no restriction on [the infringing article's] use to be *implied* for the benefit of the patentee or his assignees or licensees." *Adams v. Burke*, 84 U.S. at 457 (emphasis added). This rule makes sense given that any restriction on such a purchaser must overcome the strong presumption

that an authorized sale of a patented article exhausts the patent rights with respect to the purchaser. This strong presumption, moreover, is underpinned by common sense—in the absence of an agreement, a purchaser should not expect a charge of infringement from a patentee who has authorized the sale of a patented article. Indeed, given the need to preserve the settled expectations of buyers in the ordinary course of trade, it is axiomatic that any restriction purporting to limit the exhaustion doctrine's operation must be explicit and the burden to procure explicit restrictions must rest with the patentee.

Allowing a purchaser to waive exhaustion through express agreement is consistent with the Court's general jurisprudence concerning the waiver of federal rights. This Court has recognized that federal rights (even constitutional rights) are waivable, but an effective waiver requires the "intentional relinquishment or abandonment of a known right or privilege." *Johnson v. Zerbst*, 304 U.S. 458, 464 (1938); *see also Schneckloth v. Bustamonte*, 412 U.S. 218, 228 (1973), (observing that such waivers cannot be "coerced, by explicit or implicit means, by implied threat or covert force). Where the waiver is knowing and voluntary, moreover, the Court has enforced waivers of even the most fundamental constitutional rights. *See, e.g.*, *Patterson v. Illinois*, 487 U.S. 285, 292-93 (1988) (upholding validity of a waiver of the right to counsel). Applying those principles here means that where a patentee seeks to restrict the rights of a purchaser, the purchaser's waiver of rights under patent law should be express, knowing and voluntary, and should be enforced where those conditions are satisfied. *See Coll. Sav. Bank v. Fla.*

Prepaid Postsecondary Educ. Expense Bd., 527 U.S. 666, 682 (1999) (observing that waivers of state and federal sovereign immunity are "not [to be] implied" but that express and voluntary waivers are valid and enforceable).

The combined impact of the Court's precedents is thus that the patentee can limit the rights of purchasers in two ways. *First*, a patentee can expressly limit the authority of a *licensee* to manufacture, sell or use an article covered by the patent, such that an "unauthorized sale" to a downstream purchaser would fail to exhaust the patent right and give rise to a cause of action for infringement against either the licensee or the purchaser. This is precisely the result in *General Talking Pictures*, 305 U.S. at 127, *General Electric*, 272 U.S. at 489-90, and *Mitchell*, 83 U.S. at 550.

Second, the patentee and purchaser can expressly agree to limit the rights that the purchaser would normally have as a result of an authorized sale, such that a violation of those limitations would be actionable in an infringement action. However, the limitations would not flow downstream with a subsequent authorized sale absent an additional express agreement with a downstream purchaser. The written contractual arrangement can be with the patentee directly, for example where the patentee acts as seller, or through a licensee if the patentee requires such a contract in the licensing agreement with the licensee. In all instances, however, the restrictions must be valid under the federal antitrust laws and cannot expand or misuse the patent right. *See supra* at 16-17.

C. A Rule Permitting Express Restrictions On Purchasers Fulfills The Goals Of Patent Law And The Exhaustion Doctrine.

A strong exhaustion doctrine, but one that recognizes the patentee's ability to limit the authority of licensees through licensing agreements and restrict the rights of purchasers through express agreements where those restrictions are otherwise valid under federal law is not only the direct outgrowth of this Court's jurisprudence but also necessary to realize the policies and purposes of patent law.

First, a rule that preserves a strong exhaustion doctrine but permits parties to agree to restrictions within the scope of the patent grant that otherwise satisfy antitrust and patent misuse requirements (*see supra* pp. 16-17) strikes an appropriate balance.

One of the basic policies of patent law is to "balance between the need to encourage innovation and the [need to avoid] monopolies which stifle competition." *Bonito Boats*, 489 U.S. at 146. Congress sought to "defin[e] the scope of the limited monopoly that should be granted to authors or to inventors in order to give the public appropriate access to their work . . . [and reach] a difficult balance between the interests of authors and inventors in the control and exploitation of their writings and discoveries on the one hand, and society's competing interest in the free flow of ideas, information, and commerce on the other hand." *Sony Corp. of Am. v. Universal Studios, Inc.*, 464 U.S. 417, 429 (1984).

The exhaustion doctrine is a powerful tool for achieving this balance, because it prevents the recovery of multiple royalties for the same infringement. Exhaustion permits the patentee "but one royalty for a patented machine, and consequently when . . . consideration has been paid to him for the [patented] right, he has then to that extent parted with his monopoly, and ceased to have any interest whatever in the machine so sold or so authorized to be constructed and operated." *Bloomer*, 68 U.S. at 351-52.

Permitting patentees to enforce otherwise valid restrictions through licenses and express agreements with purchasers serves these purposes. Such a rule would prevent the patentee from extracting multiple royalties for the same infringement, because all parties with an economic interest under the patent will have a seat at the negotiating table, and all parties will negotiate clear restrictions on the activities covered by the patent where such restrictions are the product of mutual agreement. That is, when the licensee or purchaser acting in a commercially reasonable manner clearly agrees to a grant of less than full rights under the patent, they will compensate the patentee accordingly. Absent an express restriction, the patentee will be legally held to have obtained a full royalty from the licensee or a purchaser for a fully authorized sale.

Second, a vigorous exhaustion doctrine that is excepted only where there are express restrictions on the rights under a patent will achieve much needed clarity in the law. As this Court has recognized, clarity is necessary to maintain the patent system's effectiveness. "A patent holder should know what he

owns, and the public should know what he does not" to satisfy "the delicate balance the law attempts to maintain between inventors, who rely on the promise of the law to bring the invention forth, and the public, which should be encouraged to pursue innovations, creations, and new ideas beyond the inventor's exclusive rights." *Festo Corp. v. Shoketsu Kinzoku Kogyo Kabushiki Co., Ltd.*, 535 U.S. 722, 731 (2002). The importance of providing notice to the public of the scope of patent rights cannot be overstated:

> [T]he limits of a patent must be known for the protection of the patentee, the encouragement of the inventive genius of others and the assurance that the subject of the patent will be dedicated ultimately to the public. Otherwise, a zone of uncertainty which enterprise and experimentation may enter only at the risk of infringement claims would discourage invention only a little less than unequivocal foreclosure of the field.

Markman v. Westview Instruments Inc., 517 U.S. 370, 390 (1996) (internal quotation marks omitted). This is particularly true in the exhaustion context, because exhaustion defines the legal termination point of the patentee's exclusionary rights. *See Adams v. Burke*, 84 U.S. at 456. Thus, the circumstances by which a patentee can avoid this termination must be unmistakably clear to it and to purchasers.

Requiring an express agreement to overcome the normal operation of exhaustion would provide this clarity. A licensee that disregards clear restrictions

on its authority has long been understood to assume the risk of infringement because it has consented to those restrictions. Similarly, a purchaser will know whether it is subject to restrictions because it will have to expressly agree to the restrictions by written contract.

D. Applying These Principles Requires Reversal Of The Federal Circuit's Decision.

Applying these principles here requires reversal of the Federal Circuit's decision, because Intel's sales of the chipsets and microprocessors—articles with no substantial non-infringing uses—were authorized under the License Agreement, and petitioners did not expressly agree to restrictions on their use of these articles.

With respect to Intel's authority under the License Agreement, there is no dispute that its manufacture and sale of the chipsets and microprocessors were authorized. The License Agreement expressly authorizes Intel to "make, use, sell (directly or indirectly), offer to sell, import and otherwise dispose of all Intel Licensed Products" without restriction. Pet. App. 33a (internal quotation marks omitted). The Master Agreement further recognizes Intel's authority to sell the chipsets and microprocessors by allowing Intel to represent to potential purchasers that it has a "broad patent license" from respondent that "ensures that any Intel product that you purchase is licensed by [respondent] and thus does not infringe any patent held by [respondent]." Opp. 7 (internal quotation marks omitted). To be sure, the Master Agreement requires Intel to notify downstream purchasers of respondent's contention

that Intel's authority under the License Agreement "does not extend, expressly or by implication, to any product that you may make by combining an Intel product with any non-Intel product." *Id.* (internal quotation marks omitted). It is undisputed that Intel satisfied this requirement. *See id.*; Reply Br. 9. In addition, it is clear that the chipsets and microprocessors had only one substantial use—to be combined with other products and made into a computer. Opp. 9; Pet. App. 46a. Indeed, Intel provided purchasers with exact specifications instructing them how to make this combination. Pet. 3.

Having made an authorized sale of a product with no substantial non-infringing use, exhaustion must apply unless respondent and petitioners, or Intel and petitioners, expressly agreed that petitioners were purchasing restricted patent rights. Here, it is not contended that respondent and petitioners had such an express agreement between them. In the absence of an express, knowing and voluntary agreement to restrict petitioners' rights under respondent's patents, exhaustion attached with Intel's authorized sale.

The Federal Circuit's contrary conclusion—that Intel, an authorized seller, validly restricted petitioners by issuing a unilateral notice asserting that petitioners had no right to combine the chipsets with non-Intel components—is erroneous. Most obviously, the Federal Circuit's conclusion that a unilateral notice defeats the normal operation of the exhaustion doctrine is inconsistent with the Court's precedents holding that unilateral notices are not sufficient to restrict a purchaser's rights under a

patent that flow from an authorized sale. *See, e.g.*, *Motion Picture Patents Co.*, 243 U.S. at 518-19; *Ill. Tool Works*, 547 U.S. at 38.

In addition, the Federal Circuit ignored that the notice provided to the petitioners was so internally inconsistent and inconsistent with the fundamental purpose of the transaction as to render it unenforceable or hopelessly ambiguous. The sole function of the chipsets, and the sole use for which petitioners purchased them, was to be combined with non-Intel components and made into a computer. To this end, Intel provided detailed specifications describing how the combination should be made. It also provided notice that it was fully authorized to manufacture and sell the chipsets, but informed purchasers that they could not make the infringing combination, while telling them how to do so. In this context, the unilateral notice that the combination was impermissible, if enforced, was both confusing and materially inconsistent with the purpose of the transaction. *See* U.C.C. § 2-702(2) (disallowing supplemental "battle of the forms" terms that materially alter the underlying sales agreement).

E. The Federal Circuit's Decision Undermines The Doctrine Of Contributory Infringement.

Finally, the Federal Circuit's interpretation of exhaustion upsets the delicate balance of patent law by authorizing double recovery for both contributory and direct infringement. The doctrine of contributory infringement grants patentees an avenue of recourse against sellers and others who do not directly infringe the patent "where enforcement against direct infringers is impracticable," such as where the

transaction costs of seeking recovery against the direct infringers (who are generally the product's end-users) are prohibitive. *Aro Mfg. Co. v. Convertible Top Replacement Co.*, 377 U.S. 476, 511 (1964) (internal quotation marks omitted). Exhaustion and contributory infringement are linked, moreover, by virtue of the statutory definition of contributory infringement, which excludes from its scope a sale of "a staple article or commodity of commerce suitable for *substantial noninfringing use*." 35 U.S.C. § 271(c) (emphasis added). Great care must be taken when making pronouncements about exhaustion that would impact contributory infringement liability, because the latter theory of liability is susceptible to abuse, namely windfall double recovery by patentees. Thus, the Court has cautioned that "after a patentee has collected from or on behalf of a direct infringer damages sufficient to put him in the position he would have occupied had there been no infringement, he cannot thereafter collect actual damages from a person liable only for contributing to the same infringement." *Aro Mfg. Co.*, 377 U.S. at 512.

The Federal Circuit's rule, however, creates an imbalance in the patent system that encourages the patentee to exceed its legitimate recovery by first pursuing the contributory infringer and then later pursuing the direct infringer. Here, despite the fact that respondent fully authorized, and was therefore fully compensated for, Intel's contributory infringement, it may still recover against petitioners for direct infringement. That is, the court is allowing respondent a full royalty in return for authorizing Intel's contributory infringement, and then allowing respondent to recover damages from petitioners for a

direct infringement that is nothing more than the inevitable consequences of what would have been, in the absence of the License Agreement, Intel's contributory infringement.

This result can be avoided by a rule that requires a purchaser's express agreement for restrictions on an article transferred in an authorized sale. Where parties act in a commercially reasonable manner, the bargaining process involved to reach express agreements will guarantee that the patentee is not overcompensated.

II. A CONTRARY RULE THAT WOULD ENFORCE NONE OR ALL PURPORTED RESTRICTIONS ON THOSE WHO PURCHASE FROM AUTHORIZED SELLERS WOULD DISRUPT THE PATENT SYSTEM'S CAREFUL BALANCE.

Any alternative rule of exhaustion—that is, one that would require something less than restrictions in a licensing agreement or expressly agreed to restrictions on the purchaser, or one that would prohibit agreements to overcome exhaustion where there is an authorized sale of a patented article with no substantial non-infringing use—would be either overly-permissive or overly-restrictive and impede commerce by disrupting the careful balance of the patent system.

A. Adopting The Federal Circuit's Rule Would Have Significant And Immediate Detrimental Economic Impacts.

At one extreme, adopting the Federal Circuit's ruling would have immediate, detrimental economic impacts. The economic impact of the Federal Circuit's decision in the information technology ("IT")

sector and on the consuming public, indeed, would be great. Modern IT is uniquely characterized by highly integrated products. Manufacturing a single computer, for example, requires the combination of literally thousands of components, manufactured by many different entities, brought together over a complex network of supply and manufacturing chains. Moreover, "[i]n IT . . . one product regularly involves the combination of 50, 100, even 1,000, or . . . 5,000 different patent rights" all of which "must be cleared in order to get the product to market." Mark A. Lemley, *Ten Things to do About Patent Holdup of Standards (And One Not To)*, 48 B.C. L. REV. 149, 151 (2007). And this phenomenon is not limited to the IT realm—chemical, biotechnological, hardware, and software inventions are just as complex and can involve many patents per product. *See* Mark A. Lemley & Carl Shapiro, *Patent Holdup and Royalty Stacking*, 85 U. TEX. L. REV. 1991, 1992 (2007).

If, as the Federal Circuit held, suspending exhaustion is as easy as requiring licensees to provide mere unilateral notice to purchasers, the rule of exhaustion would be too easily circumvented. A troubling regime, which has already begun to develop, would flourish wherein resourceful patentees will require insertion of restrictive "notices" at every possible point in the manufacturing and distribution channel. If the patentee could extract license fees for a single inventive contribution at every point in the distribution channel, its royalty base would increase dramatically and inappropriately because it would collect multiple royalties for the same infringement, thus destroying the efficiencies and benefits of our modern networked economy. Indeed, the ability to "hold up" product

distribution with unilateral restrictions on a single component could multiply into so many roadblocks that a product could never make it to market. And instead of being limited to the judicially mandated "one bite" of fair compensation, the patentee will now enjoy a smorgasbord of sequentially increasing royalty payments. The result: companies will be subject to increasing royalties at higher levels of integration in the manufacturing chain, and considering the number of patents that apply to complex IT products, the obvious outcome will be increased costs at each stage. Consumers would suffer from the higher cost of, and reduced access to, IT products, while manufacturers down the production chain would have fewer resources available to devote to follow-on innovations.

B. An Alternative Rule Precluding Restrictions On Purchasers Would Over-Expand The Exhaustion Doctrine To The Detriment Of Innovation.

At the other extreme, an alternative test that would require immutable exhaustion would be overly-restrictive and unnecessarily limit the pro-competitive effects of allowing patentees to grant, and purchasers to secure, restricted patent rights through express agreements of varying scope at correspondingly varying valuations.

Such a rule would be contrary to the longstanding principle that a patentee enjoys great freedom, albeit limited by antitrust laws and other legal principles such as the patent misuse doctrine, in granting rights under only portions of its patent right. *See supra* pp. 16-17. If exhaustion becomes immutable, the patentee cannot enjoy its traditional ability to

nonetheless restrict rights under the patent by field, geography or duration. *See, e.g.*, MILGRIM, *supra*, §§ 2.32-2.38 (describing these various restrictions).

The ability of patentees to grant a varying array of rights under the patent at correspondingly varying valuations, moreover, is extremely beneficial to the public. Permitting the patentee, licensee and purchaser to create and enforce restrictions through express agreements ultimately "serve[s] pro-competitive ends by allowing the licensor to exploit its property as efficiently and effectively as possible. These [limitations] can be used to give a licensee an incentive to invest in the commercialization and distribution of products . . . and to develop additional applications for the licensed property." U.S. Dep't of Justice and Federal Trade Comm'n, ANTITRUST GUIDELINES FOR THE LICENSING OF INTELLECTUAL PROPERTY 5 (1995), *reprinted in* 4 Trade Reg. Rep. (CCH) ¶ 13,132, at 20,736 (Apr. 6, 1995). Specifically, purchasers have the opportunity to pay a lower price for only those patent rights they need or desire, rather than pay a full royalty for more rights than they require. Because purchasers can negotiate for only those patent rights necessary for their purposes, restricted purchases are economically efficient.

In addition, any immutable exhaustion rule, while seemingly simple to apply, would greatly complicate exhaustion questions. Under IBM's proposed test, patentees, licensees and purchasers that wish to limit exhaustion have a clear path: write clear and express restricted licenses or purchase agreements. In contrast, a rule under which exhaustion cannot be overcome if a patented article has no substantial non-

infringing use would force many exhaustion questions into the courts, because determining whether such uses exist is a difficult and fact-intensive question that is often interpreted differently by patentee and purchaser. *See, e.g.*, *Bandag, Inc. v. Al Bolser's Tire Stores, Inc.*, 750 F.2d 903, 924 (Fed. Cir. 1984) (implied license case demonstrating the complexity of determining the existence of a substantial non-infringing use); *Mentor H/S, Inc. v. Med. Device Alliance, Inc.*, 244 F.3d 1365, 1379 (Fed. Cir. 2001) (same). Indeed, the instant case shows the ambiguity inherent in the phrase "substantial non-infringing use." Here, respondent argued, unsuccessfully, that the chipsets and microprocessors had substantial non-infringing uses, because they could have been used in computers sold "outside the United States," Pet. App. 46a, or "used as replacement parts." Pet. App. 48a. As the district court pointed out, these purported alternative uses are so generic and insubstantial as to "eviscerate the defenses of exhaustion and implied license." Pet. App. 47a. But the arguments demonstrate the potential for disagreement between the patentee and purchaser regarding possible uses for a patented article. *See also Monsanto Co. v. McFarling*, 488 F.3d 973 (Fed. Cir. 2007) (involving protracted litigation over the issue of infringing uses for soybean seeds), *petition for cert. filed*, 76 U.S.L.W. 3081 (No. 07-241, Aug. 22, 2007). Thus, in practice, such a rule would obscure, rather than clarify, the patentee's, licensee's and purchaser's rights under the exhaustion doctrine, forcing exhaustion disputes into the courts.

In short, as in most cases involving the scope and application of patent law, the best rule, and the one

required under this Court's jurisprudence, is a balanced one.

CONCLUSION

For these reasons, the decision of the Federal Circuit should be reversed.

Respectfully submitted,

DAVID J. KAPPOS
MARIAN UNDERWEISER
WILLIAM P. SKLADONY
IBM CORPORATION
One North Castle Drive
Armonk, NY 10504
(914) 765-4343

JOHN D. FLYNN
IBM CORPORATION
11501 Burnet Road
Austin, TX 78758
(512) 838-2753

TRACI L. LOVITT
(*Counsel of Record*)
OGNIAN V. SHENTOV
SARAH E. LIEBER
JONES DAY
222 East 41st Street
New York, NY 10017
(212) 326-3939

MICHAEL A. CARVIN
JONES DAY
51 Louisiana Ave., N.W.
Washington, DC 20001
(202) 879-3939

Counsel for Amicus Curiae

November 12, 2007

No. 06-937

In the

Supreme Court of the United States

QUANTA COMPUTER, INC.,
QUANTA COMPUTER USA, INC.,
Q-LITY COMPUTER, INC,
Petitioners,

v.

LG ELECTRONICS, INC,
Respondent.

On Writ of Certiorari
to the U.S. Court of Appeals
for the Federal Circuit

BRIEF OF THE LICENSING EXECUTIVES SOCIETY (U.S.A. & CANADA), INC. AS *AMICUS CURIAE* IN SUPPORT OF NEITHER PARTY

Joel E. Lutzker
Counsel of Record
LEONARD S. SORGI
SHEPPARD MULLIN RICHTER
& HAMPTON LLP
30 Rockefeller Plaza, 24th Floor
New York, New York 10112
(212) 332-3800

Counsel for Amicus Curiae
the Licensing Executives Society
(U.S.A. & Canada), Inc.

Darren M. Franklin
SHEPPARD MULLIN RICHTER
& HAMPTON LLP
333 South Hope Street,
48th Floor
Los Angeles, California 90071
(213) 620-1780

Counsel for Amicus Curiae
the Licensing Executives
Society (U.S.A. & Canada), Inc.

GibsonMoore Appellate Services, LLC
421 East Franklin Street • Suite 230 • Richmond, VA 23219
804-249-7770 • gibsonmoore@comcast.net

TABLE OF CONTENTS

Page

TABLE OF AUTHORITIES ii

IDENTITY AND INTEREST OF AMICUS CURIAE 1

SUMMARY OF THE ARGUMENT 2

ARGUMENT 4

I. THE COURT HAS GIVEN CONFLICTING SIGNALS ON WHEN THE DOCTRINE OF PATENT EXHAUSTION MAY BE LIMITED 4

II. THE FEDERAL CIRCUIT'S OPINION IN *LG ELECTRONICS* IS AMBIGUOUS AS TO THE RELEVANCE OF A NOTICE PROVISION IN A CONDITIONAL PATENT LICENSE 11

III. THERE IS CONFUSION IN CASE LAW AS TO WHETHER THE PATENT EXHAUSTION DOCTRINE IS A SPECIES OF IMPLIED LICENSE OR A LIMITATION OF THE PATENT GRANT ITSELF 13

CONCLUSION 17

TABLE OF AUTHORITIES

Page(s)

Cases:

Adams v. Burke,
84 U.S. (17 Wall.) 453 (1873) ..... *passim*

American Indus. Fastener Corp. v. Flushing Enters., Inc.,
362 F. Supp. 32 (N.D. Ohio 1973) 7-8

Armstrong v. Motorola, Inc.,
374 F.2d 764 (7th Cir. 1967) 7

Automatic Radio Manufacturing Co. v. Hazeltine Research, Inc.,
339 U.S. 827 (1950) 11

Bloomer v. McQuewan,
55 U.S. (14 How.) 539 (1852) 5

Carborundum Co. v. Molten Metal Equipment Innovations, Inc.,
72 F.3d 872 (Fed. Cir. 1995) 14

General Talking Pictures Corp. v. Western Electric Co.,
304 U.S. 175, *on reh'g*,
305 U.S. 124 (1938) ..... *passim*

Glass Equipment Development, Inc. v. Besten, Inc.,
174 F.3d 1337 (Fed. Cir. 1999) 14

Hobbie v. Jennison,
149 U.S. 355 (1893) 12

Intel Corp. v.
U.S. International Trade Commission,
946 F.2d 821 (Fed. Cir. 1991) 14-15

Intel v. ULSI Sys. Tech., Inc.,
995 F.2d 1566 (Fed. Cir. 1993) 14

Keeler v. Standard Folding Bed Co.,
157 U.S. 659 (1895) 8, 12, 13, 15

LG Elecs., Inc. v. Bizcom Elecs., Inc.,
453 F.3d 1364 (Fed. Cir. 2006) 11

Mallinckrodt, Inc. v. Medipart, Inc., 1
5 U.S.P.Q.2d 1113 (N.D. Ill. 1990),
rev'd in part, vacated in part, & remanded,
976 F.2d 700 (Fed. Cir. 1992) 7

Met-Coil Systems Corp. v.
Korners Unlimited, Inc.,
803 F.2d 684 (Fed. Cir. 1986) 14

Motion Picture Patents Co. v
Universal Film Mfg. Co.,
243 U.S. 502 (1917) 15

Straus v Victor Talking Mach. Co.,
243 U.S. 490 (1917) 16

United States v. Univis Lens Co.,
316 U.S. 241 (1941) ..... *passim*

Other Authorities:

Glen O. Robinson,
Personal Property Servitudes,
71 U. CHI. L. REV. 1449 (2004)..... 16

John W. Osborne, *A Coherent View of Patent Exhaustion: A Standard Based on Patentable Distinctiveness*,
20 SANTA CLARA COMPUTER & HIGH TECH. L.J. 643 (2004)..... 8

Robin Feldman, *The Open Source Biotechnology Movement: Is It Patent Misuse?*,
6 MINN. J.L. SCI. & TECH. (2004) 10, 11

IDENTITY AND INTEREST OF AMICUS CURIAE[1]

The Licensing Executives Society (U.S.A. & Canada), Inc. ("LES") is a non-profit professional society comprised of over 6,000 members engaged in the transfer, use, development, manufacture and marketing of intellectual property. LES's members include a wide range of professionals, including business executives, lawyers, licensing consultants, engineers, academicians, scientists and government officials, all of whom are engaged in the licensing of intellectual property. Members are employed by many large corporations, professional firms and universities. LES's purposes include: encouraging high standards and ethics among persons engaged in domestic and international licensing and transfers of technology and intellectual property rights; and assisting its members in improving their skills and techniques in those fields. With this broad-based constituency, LES is directly interested in the impact this Court's decision will have on the licensing of intellectual property, and patents in particular.

LES has received the consent of the parties in this case to file this brief.

SUMMARY OF THE ARGUMENT

This case highlights the tension between the doctrine of patent exhaustion as espoused in *Adams v. Burke*, 84 U.S. (17 Wall.) 453 (1873), and *United*

---

[1] The parties have consented to the filing of this brief. Counsel for a party did not author this brief in whole or in part. No person or entity, other than the *Amicus Curiae*, its members, or its counsel, made a monetary contribution to the preparation and submission of this brief.

States v. Univis Lens Co., 316 U.S. 241 (1941), on the one hand, and the limitations on the patent exhaustion doctrine recognized in *General Talking Pictures Corp. v. Western Electric Co.*, 304 U.S. 175, *on reh'g*, 305 U.S. 124 (1938), and its progeny, on the other. In *General Talking Pictures*, the Court held that a knowing purchaser of products from a patent licensee who is violating the terms of a restricted patent license could be found to be a patent infringer, notwithstanding the patent exhaustion doctrine. On the other hand, the Court held in *Univis* that the patent exhaustion doctrine applies to a purchaser who knowingly buys an article from a patent licensee under a restricted license which disclaimed downstream purchaser license rights. Through these and other cases, the courts have given conflicting signals on whether a patentee may limit the doctrine of patent exhaustion by imposing conditions on sales of patented products by licensees. The Court should bring clarity and certainty to the issue of whether and to what extent a patentee may limit the doctrine of patent exhaustion through licensing terms.

In particular, there is confusion in the case law as to whether the patent exhaustion doctrine is a species of implied license or a limitation of the patent grant itself. This confusion is significant because notice to a purchaser of patented goods is a way of overcoming an implied license, but not a way of overcoming a limitation of the patent grant. Further, if exhaustion extinguishes the control by the patent laws of a given article, a license to use or sell that article is not required. If, however, exhaustion is a form of implied license, negation of that license is possible.

As discussed below, there are two conflicting lines of cases, one indicating that the patent exhaustion doctrine is a species of implied license, the other indicating. that the patent exhaustion doctrine is a limitation of the patent grant itself. The cases simply leave unresolved this fundamental question. The Court should bring clarity and certainty to the issue of whether the patent exhaustion doctrine is a species of implied license, or a limitation of the patent grant itself.

This issue is salient to the case at bar because the Federal Circuit's opinion notes that Intel notified the defendants pursuant to the license. The opinion, however, does not explain the relevance of the notification. Had Intel not notified defendants, would the outcome have been the same? Or even in view of the notice, is the nature of patent exhaustion such that petitioner, the downstream purchaser, cannot be an infringer. The answer is clouded by the confusion over whether the patent exhaustion doctrine is a species of implied license or a limitation of the patent grant itself.

Both patent licensees and licensors have an interest in knowing with certainty the consequences to downstream purchasers of products sold pursuant to a license agreement that authorizes the practice of something less than the full bundle of rights conferred by the patent. The Court is now in a position to resolve uncertainty in this area by issuing a ruling that clarifies and explains the continuing validity and scope of the patent exhaustion doctrine. LES urges the Court to provide such clarity.

ARGUMENT

I. THE COURT HAS GIVEN CONFLICTING SIGNALS ON WHEN THE DOCTRINE OF PATENT EXHAUSTION MAY BE LIMITED

The Court articulated the patent exhaustion doctrine more than a century ago in *Adams v. Burke*, 84 U.S. (17 Wall.) 453 (1873), which is regarded as the seminal case on the doctrine. Adams, the owner of a patent on coffin lids, granted rights to Lockhart to make, use, and sell patented coffin lids within a ten-mile radius from the center of Boston, Massachusetts. Burke, an undertaker, bought several coffins from Lockhart in Boston, which included the coffin lids that Lockhart was authorized to sell. Burke then used the coffins in Natick, Massachusetts, seventeen miles from Boston's center. Adams sued Burke for patent infringement. This Court affirmed the district court's dismissal of the patentee's infringement case against Burke as follows:

> [I]in the essential nature of things, when the patentee, or the person having his rights, sells a machine or instrument whose sole value is in its use, he receives the consideration for its use and he parts with the right to restrict that use. The article, in the language of the court, passes without the limit of the monopoly. That is to say, the patentee or his assignee having in the act of sale received all the royalty or consideration which he claims for the use of his invention in that particular

> machine or instrument, it is open to the use of the purchaser without further restriction on account of the monopoly of the patentees.

Id. at 456.

Adams, as well as later exhaustion cases of this Court, indicates that exhaustion restricts the patentee's power to control a patented article after a first sale. Under *Adams*, this restriction applies even where the later use or disposition of the patented article was something that the patentee did not authorize the licensee to do, so long as the licensee's sale itself was authorized and unconditional. As stated by Chief Justice Taney in *Bloomer v. McQuewan*, 55 U.S. (14 How.) 539 (1852), when the patented article "passes to the hands of the purchaser, it is no longer within the limits of the monopoly. It passes outside of it, and is no longer under the protection of the act of Congress." *Id.* at 549.

In later cases, this Court made clear that there are limits on the patent exhaustion doctrine, such as where a purchaser knows that a licensee is violating the terms of a restricted patent license. In *General Talking Pictures Corp. v. Western Electric Co.*, 304 U.S. 175, *on reh'g*, 305 U.S. 124 (1938), the Court held that certain use-restricted patent licenses could be legal and that a patentee could enforce a breach of such restrictions by suing for patent infringement. The plaintiff owned patents on vacuum tube amplifiers that could be used in two separate fields: (1) "the commercial field of sound recording and reproducing, which embraces talking

picture equipment for theatres," and (2) "the private or home field, which embraces radio broadcast reception, radio amateur reception and radio experimental reception." The plaintiff granted exclusive licenses covering parts of the commercial field to members of a patent pool to which plaintiff belonged. Plaintiff also granted non-exclusive licenses restricted to the manufacture and sale of amplifiers for private or home use. The non-exclusive licenses required licensees to affix a notice to the amplifiers stating that the amplifiers were licensed solely for noncommercial use. One non-exclusive licensee, American Transformer Company, sold amplifiers to the defendant knowing that the defendant intended to provide them to commercial movie theaters. The defendant was aware of the restriction in the non-exclusive license.

In its original opinion, this Court held that the defendant, a knowing purchaser from a licensee who was violating the terms of a restricted patent license, was an infringer:

> The Transformer Company could not convey to petitioner what both knew it was not authorized to sell. ... Petitioner, having with knowledge of the facts bought at sales constituting infringement, did itself infringe the patents embodied in the amplifiers when it leased them for use as talking picture equipment in theaters.

General Talking Pictures, 304 U.S. at 181-82.

On rehearing, the Court reaffirmed the original result, stressing that, because of the breach

of the patent license, the infringing devices were not made and sold "under the patent" and thus did not pass "into the hands of a purchaser in the ordinary channels of trade." *General Talking Pictures*, 305 U.S. at 127.

General Talking Pictures concerned a licensee who was violating the terms of a restricted patent license. What about use restrictions that apply after the first sale of a patented product? This is where some tension appears between *General Talking Pictures* and the first-sale doctrine of *Adams*. *See, e.g., Mallinckrodt, Inc. v. Medipart, Inc.*, 15 U.S.P.Q.2d 1113, 1117-18 (N.D. Ill. 1990), *rev'd in part, vacated in part, & remanded*, 976 F.2d 700 (Fed. Cir. 1992) ("There clearly is some tension between *General Talking Pictures* and the earlier cases: *General Talking Pictures* might be read to say that post-sale restrictions can be enforced against purchasers (the Court found the purchasing defendant, GTP, liable for infringement), while the earlier exhaustion on sale cases would otherwise seem to say that that was not possible, or at least not under the patent laws.").

This Court gave guidance in *United States v. Univis Lens Co.*, 316 U.S. 241 (1941), but because the case arose in the context of a violation of the antitrust laws, the application of its principles in a pure patent scenario has been the subject of disagreement. *See, e.g., Armstrong v. Motorola, Inc.*, 374 F.2d 764, 75 (7th Cir. 1967) (stating that *Univis* "was a Sherman Act case in which the patentee had been using his patent to achieve resale price maintenance and therefore the case is not in point"); *American Indus. Fastener Corp. v. Flushing Enters.*,

Inc., 362 F. Supp. 32, 36 (N.D. Ohio 1973) ("*Univis* ... involves price restrictions, not territorial restrictions. Hence, *Univis* is not directly controlling."). *See generally* John W. Osborne, *A Coherent View of Patent Exhaustion: A Standard Based on Patentable Distinctiveness*, 20 SANTA CLARA COMPUTER & HIGH TECH. L.J. 643, 649 (2004) ("[A]lthough attempts have been made, and are still made today, to characterize *Univis Lens* as an antitrust or implied license decision, the fundamental holding was based entirely on the patent exhaustion doctrine.").

United States v. Univis Lens Co., 316 U.S. 241 (1941) reiterates the principle that exhaustion restricts the patentee's power to control a patented article after a first sale:

> Our decisions have uniformly recognized that the purpose of the patent law is fulfilled with respect to any particular article when the patentee has received his reward for the use of his invention by the sale of the article, and that once that purpose is realized the patent law affords no basis for restraining the use and enjoyment of the thing sold. *Adams v. Burke*, *supra*, 456; *Keeler v. Standard Folding Bed Co.*, 157 U.S. 659; *Motion Picture Co. v. Universal Film Co.*, 243 U.S. 502; and see cases collected in *General Pictures Co. v. Electric Co.*, 305 U.S. 124, 128, n. 1.

316 U.S. at 251.

In *Univis*, the patentee, Univis Corp., held a patent having claims directed to an eyeglass lens and the method for making the lens by producing, grinding, and polishing lens blanks. *Id.* at 243. Univis Corp. licensed its related company, Univis Lens, to manufacture lens blanks. Univis Lens sold those licensed blanks to wholesalers and retailers. *Id.* at 244-45. After purchasing the Univis Lens blanks, these wholesalers and retailers would finish the grinding and polishing of the lens blanks under license and through the practice of Univis Corp.'s method patent. *Id.*

The licenses to the wholesalers and retailers contained strict disclaimers and limitations on the rights granted by Univis Corp. to the individual licensees. One of the main issues before this Court was whether the patent laws permitted a patentee to prevent a purchaser of a licensed product (the lens blanks) from engaging in the steps necessary to complete and sell the finished product. In addressing a patentee's ability under the patent laws to exercise control over a patented product after a first sale, the Court stated that "where one has sold an uncompleted article which, because it embodies essential features of his patented invention, is within the protection of his patent, and has destined the article to be finished by the purchaser in conformity with the patent, he has sold his invention so far as it is or may be embodied in that particular article." *Id.* at 250-51.

Accordingly, the Court held that, since the unfinished lens blanks were sold under license from Univis Corp., and since the blanks had no use except

in practicing Univis Corp.'s patent, the patent rights respecting the lens blanks and their use as a finished product were exhausted on sale: "[T]he authorized sale of an article which is capable of use only in practicing the patent is a relinquishment of the patent monopoly with respect to the article sold. *Id.* at 249.

Thus, this Court in *Univis* held that the patent exhaustion doctrine applies, even if the purchaser knowingly buys the article from a licensee who is obligated under the patent license to fix the price at which the article may ultimately be sold. But the Court did not address the question of whether *General Talking Pictures* enjoys continuing vitality and, if so, to what extent. In *Univis*, the Court arguably overruled parts of *General Talking Pictures* by reaffirming the first sale doctrine in the area of price-fixing. *See* Robin Feldman, *The Open Source Biotechnology Movement: Is It Patent Misuse?*, 6 MINN. J.L. SCI. & TECH. 117, 147 n.147 (2004) ("[L]ater Supreme Court cases such as *United States v. Univis Lens*, 316 U.S. 241 (1942), have implicitly overruled portions of [*General Talking Pictures*] by reaffirming the first sale doctrine in the area of price-fixing.").

Did *Univis* truly overrule parts of *General Talking Pictures*? If so, is the holding of *Univis* limited to the area of price-fixing or does it extend into broader field of use restrictions? The Court has not handed down any decisions squarely dealing with the impact of field of use restrictions in licenses since its decision in *General Talking*

Pictures.[2] The Court should bring clarity and certainty to the issue of whether and to what extent a patentee may limit the doctrine of patent exhaustion by imposing conditions on licensees or their sales.

II. THE FEDERAL CIRCUIT'S OPINION IN *LG ELECTRONICS* IS AMBIGUOUS AS TO THE RELEVANCE OF A NOTICE PROVISION IN A CONDITIONAL PATENT LICENSE

As found by the Federal Circuit below, the LGE-Intel license "expressly disclaims granting a license allowing computer system manufacturers to combine Intel's licensed parts with other non-Intel components. Moreover, this conditional agreement required Intel to notify its customers of the limited scope of the license, which it did." *LG Elecs., Inc. v. Bizcom Elecs., Inc.*, 453 F.3d 1364, 1376 (Fed. Cir. 2006). Pursuant to this agreement, Intel notified defendants that, although it was licensed to sell the products to them, defendants were not authorized under Intel's license to combine the products with non-Intel products. *Id.* at 1368.

The Federal Circuit's opinion notes that Intel notified the defendants as requested, but does not explain the relevance of the notification.

---

[2] In *Automatic Radio Manufacturing Co. v. Hazeltine Research, Inc.*, 339 U.S. 827 (1950), the parties contested a provision requiring a licensee to affix a notice to a product limiting its use to private, educational, and noncommercial uses. *Id.* at 834-35. But the Supreme Court declined to address the question, finding that the issue was not properly before the Court. *See id.* at 835-36. *See generally* Feldman, *supra*, at 147 n.145.

Had Intel not notified defendants, would the outcome have been the same? Or even in view of the notice, is the nature of patent exhaustion such that petitioner, the downstream purchaser, cannot be an infringer. The answer is unclear. The Court should bring clarity and certainty to this issue.

This Court first addressed whether knowledge or intent on the part of the defendant could alter application of the patent exhaustion rule in *Hobbie v. Jennison*, 149 U.S. 355 (1893). In *Hobbie*, a licensee for the State of Michigan (Jennison) sold and delivered patented pipes knowing that the purchaser intended to use the pipes in Hartford, Connecticut, a territory which was not licensed to Jennison. An attempt was then made to distinguish the case from *Adams* on the ground that the sale was made with the knowledge and intention on the part of the defendant that the use would be at Hartford. This Court rejected this argument and held that "neither the actual use of the pipes in Connecticut, or a knowledge on the part of the defendant that they were intended to be used there, can make him liable." *Id.* at 363.

In *Keeler v. Standard Folding Bed Co.*, 157 U.S. 659 (1895), this Court held that neither the seller's nor the purchaser's knowledge or intent was relevant to the application of the patent exhaustion doctrine. In that case, the seller, a licensee under the patent, knew that its customer intended to use the goods in the territory of another. Citing the exhaustion doctrine, this Court stated that "it is competent for one to sell the patented articles to persons who intend, with the knowledge of the vendor, to take them for use into the territory of the

other." *Id.* at 666. The Court based its decision on the principle of patent exhaustion that "the purchase of the article from one authorized by the patentee to sell it, emancipates such article from any further subjection to the patent ...." *Id.*

In *Univis*, there was an express disclaimer that the license granted was nothing more than "the privilege of selling the patented invention in the manner and to the extent stated." 316 U.S. at 245. This Court held that this disclaimer did not curtail application of the first sale doctrine.

If the Federal Circuit's opinion in *LG Electronics* turned on the notice provision, then is there a conflict with *Univis*? If there is a conflict with *Univis*, then should *Univis* be overruled or limited so that an appropriate notice provision in a license agreement relieves a patentee from the burden of having to contend with the patent exhaustion doctrine? Or should the Federal Circuit's decision be reversed so that purchasers of patented products from a licensee acting within the scope of its license have the freedom to use and resell them as they wish? The Court should bring clarity and certainty to the issue of whether a notice provision in a conditional patent license is relevant to the application of the patent exhaustion doctrine.

III. THERE IS CONFUSION IN CASE LAW AS TO WHETHER THE PATENT EXHAUSTION DOCTRINE IS A SPECIES OF IMPLIED LICENSE OR A LIMITATION OF THE PATENT GRANT ITSELF

Notice is a way of overcoming an implied license, but not a way of overcoming a limitation of

the patent grant. This point raises the following fundamental question: Is the patent exhaustion doctrine a species of implied license or a limitation of the patent grant itself? There are two conflicting lines of cases.

Several cases indicate that the patent exhaustion doctrine is a species of implied license. *See, e.g., Glass Equipment Development, Inc. v. Besten, Inc.*, 174 F.3d 1337, 1342 (Fed. Cir. 1999) ("When, as here, a party argues that the sale of a device carries with it an implied license to use that device in practicing a patented invention, that party has the burden to show that, inter alia, the purchased device has no noninfringing uses."); *Carborundum Co. v. Molten Metal Equipment Innovations, Inc.*, 72 F.3d 872, 878 (Fed. Cir. 1995) (noting "two requirements for the grant of a license implied by the sale of nonpatented equipment used to practice a patented invention); *Met-Coil Systems Corp. v. Korners Unlimited, Inc.*, 803 F.2d 684, 686-87 (Fed. Cir. 1986) (holding that sale of nonpatented equipment to practice patented invention results in implied license).

Other cases indicate that the patent exhaustion doctrine is a limitation of the patent grant itself. *See, e.g., Univis*, 316 U.S. at 252 ("The first vending of any article manufactured under a patent puts the article beyond the reach of the monopoly which that patent confers."); *Intel v. ULSI Sys. Tech., Inc.*, 995 F.2d 1566, 1568 (Fed. Cir. 1993) (upholding patent exhaustion defense: "[T]he law is well-settled that an authorized sale of a patented product places the product *beyond the reach of the patent*.") (emphasis added); *Intel Corp. v. U.S.*

International Trade Commission, 946 F.2d 821, 826 (Fed. Cir. 1991) ("If the Intel/Sanyo agreement permits Sanyo to act as a foundry for another company for products covered by the Intel patents, the purchaser of those licensed products from Sanyo would be free to use and/or resell the products. Such further use and sale is *beyond the reach of the patent statutes*.") (emphasis added).

This doctrinal split in post-*Univis* cases clouds the answer to the question of whether the patent exhaustion doctrine is a species of implied license or a limitation of the patent grant itself. The interplay between patent and contract rights in the realm of patent exhaustion was recognized in *Adams*. 84 U.S. at 456 (noting that the "limitation upon the right of use" was "not contemplated by the statute *nor within the reason of the contract*") (emphasis added). Twenty years later, the Court in *Keeler* explicitly reserved judgment on the issue of whether a patentee could enforce an express limitation on use or resale under contract law. 157 U.S. at 660 ("Whether a patentee may protect himself and his assignees by special contracts brought home to the purchasers is not a question before the court and upon which it expresses no opinion.").

Thereafter, in several cases nullifying express license conditions on resale, the Court suggested that patentees could not enforce such limitations under contract law. *See Motion Picture Patents Co. v Universal Film Mfg. Co.*, 243 U.S. 502, 516 (1917) ("[I]t is not competent for the owner of a patent by notice attached to its machine to, in effect, extend the scope of its patent monopoly by restricting the

use of it to materials necessary in its operation but which are no part of the patented invention, or to send its machines forth into the channels of trade of the country subject to conditions as to use or royalty to be paid to be imposed thereafter at the discretion of such patent owner."); *Straus v Victor Talking Mach. Co.*, 243 U.S. 490, 501 (1917) (finding resale price restrictions in a "license notice" affixed to a product to be invalid as "a mere price-fixing enterprise"); *Univis*, 316 U.S. at 250-51 (nullifying resale price restrictions in license agreements for patented items because a sale "exhausts the monopoly in that article").

As one commentator has noted, the *Motion Picture Patents*, *Straus*, and *Univis* cases "might be distinguished as independent of the first sale doctrine on the grounds that the restrictions were unlawful trade restraints. However, the Court made no such distinction and the decisions can be reasonably interpreted to hold that the first sale doctrine was a fixed limitation, not simply a default rule." Glen O. Robinson, *Personal Property Servitudes*, 71 U. CHI. L. REV. 1449, 1466 (2004). This point is important because it goes to the heart of whether the patent exhaustion doctrine is a limitation of the patent grant itself, or is a principle that can be overcome through policy considerations or simply notice to the buyer of patented goods. The Court should bring clarity and certainty to the issue of whether the patent exhaustion doctrine is a species of implied license or a limitation of the patent grant itself.

CONCLUSION

For the foregoing reasons, the Licensing Executives Society (U.S.A. & Canada), Inc. requests that the Court's ruling in this case provide the certainty desired by licensees and licensors in the area of the patent exhaustion doctrine.

Respectfully submitted,

JOEL E. LUTZKER
Counsel of Record
LEONARD S. SORGI
SHEPPARD MULLIN RICHTER & HAMPTON LLP
30 Rockefeller Plaza, 24th Floor
New York, New York 10112
(212) 332-3800

DARREN M. FRANKLIN
SHEPPARD MULLIN RICHTER & HAMPTON LLP
333 South Hope Street, 48th Floor
Los Angeles, California 90071
(213) 620-1780

Counsel for Amicus Curiae the Licensing Executives Society (U.S.A. & Canada), Inc.

73 54387 B

12

16pg

No. 06-937

FILED
NOV 13 2007
OFFICE OF THE CLERK
SUPREME COURT, U.S.

In the Supreme Court of the United States

QUANTA COMPUTER, INC., ET AL.,

PETITIONERS,

v.

LG ELECTRONICS, INC.,

RESPONDENT.

ON A WRIT OF CERTIORARI TO THE UNITED STATES COURT OF APPEALS FOR THE FEDERAL CIRCUIT

BRIEF OF *AMICUS CURIAE* MOTOROLA, INC. IN SUPPORT OF PETITIONERS

RUSSELL E. LEVINE, P.C.
Counsel of Record
CHRISTOPHER R. LIRO
DAVID W. HIGER
KIRKLAND & ELLIS LLP
200 E. RANDOLPH
Chicago, IL 60601
(312) 861-2000

November 13, 2007

WILSON-EPES PRINTING CO., INC. – (202) 789-0096 – WASHINGTON, D. C. 20002

QUESTION PRESENTED

Whether the Federal Circuit erred by holding, in conflict with decisions of this Court and other courts of appeals, that respondent's patent rights were not exhausted by its license agreement with Intel Corporation, and Intel's subsequent sale of product under the license to petitioners.

RULE 29.6 STATEMENT

Motorola, Inc. is a public corporation, incorporated in Delaware. Motorola has no parent corporation, and no publicly held corporation owns 10% or more of its stock.

TABLE OF CONTENTS

QUESTION PRESENTED i

RULE 29.6 STATEMENT ii

STATEMENT OF INTEREST OF *AMICUS CURIAE* 1

SUMMARY OF ARGUMENT 3

I. Motorola Supports Petitioners' Positions With Respect To The Question Presented. 3

II. The Court Should Not Decide What Patent Exhaustion Effect, If Any, The Release LGE Granted To Intel As Part Of The License Agreement Has On Products Intel Sold Pre-Release. 6

CONCLUSION 9

TABLE OF AUTHORITIES

Page(s)

Cases

Adams v. Burke,
84 U.S. (17 Wall.) 453 (1873) 5, 8

Bauer v. O'Donnell,
229 U.S. 1 (1913)..... 8

Bement v. National Harrow Co.,
186 U.S. 70 (1902)..... 8

Bloomer v. McQewan,
55 U.S. (14 How.) 539 (1853)..... 9

Bloomer v. Millinger,
68 U.S. (1 Wall.) 340 (1864) 9

Boston Store v. American Graphophone Co.,
246 U.S. 8 (1918)..... 8

Ethyl Gasoline Corp. v. United States,
309 U.S. 436 (1940)..... 8

General Talking Pictures Corp. v. Western Electric Co.,
304 U.S. 175 (1938)..... 8

Henry v. A.B. Dick Co.,
224 U.S. 1 (1912)..... 8

Hilgraeve Corp. v. Symantec Corp.,
265 F.3d 1336 (Fed. Cir. 2001)..... 8

Hobbie v. Jennison,
149 U.S. 355 (1893)..... 9

Jacobs v. Nintendo of America, Inc.,
370 F.3d 1097, 1101 (Fed. Cir. 2004)..... 2

Keeler v. Standard Folding Bed Co.,
157 U.S. 659 (1895)..... 9

LG Electronics, Inc. v. Asustek Computer, Inc.,
248 F. Supp. 2d 912 (N.D. Cal. 2003) 7

Mitchell v. Hawley,
83 U.S. (16 Wall.) 544 (1872) 4, 8

Motion Picture Patents Co. v. Universal Film Mfg. Co.,
243 U.S. 502 (1917) 5, 8

Straus v. Victor Talking Machine Co.,
243 U.S. 490 (1917) 8

United States v. General Electric Co.,
272 U.S. 476 (1926) 8

United States v. Univis Lens Co.,
316 U.S. 241 (1942) 4, 8

Yee v. Escondido,
503 U.S. 519 (1992) 7

Rules

Supreme Court Rule 14.1(a) 7

Other Authorities

Herbert A. Stern, *Intellectual Property Licensing in Today's "E-conomy", Software Licensing: Custom Software Licensing From the Licensee's Perspective*, ALI-ABA Course of Study, May 29-30, 2003 2

James H. Davis et al., *Going International: Fundamentals of International Business Transactions, The Technology License Agreement*, ALI-ABA Course of Study, July 8, 1996 2

Joseph Yang, *Advanced Patent Licensing: What You Need to Know Before Licensing Your Patent 2007, Joint Venture And Consulting Agreements*, Practising Law Institute Patents, Copyrights, Trademarks, and Literary Property Course Handbook Series, May-June 2007 2

STATEMENT OF INTEREST OF *AMICUS CURIAE*[1]

Motorola, Inc. ("Motorola") is a Fortune 100 company that designs, manufactures and sells a variety of telecommunications, electronic, and other equipment, products and services. Motorola owns thousands of U.S. patents and has entered into many different types of agreements relating to its patent portfolio, or portions thereof, including license agreements, covenants not to sue, and releases. Motorola also has rights, of varying degree, to hundreds if not thousands of third-party patents pursuant to various agreements, including license agreements, covenants not to sue, and releases.

Patent license agreements, covenants not to sue, and releases are entered into for a variety of different fact-specific reasons, and the legal rights granted or conveyed by each type of agreement are, and are intended to be, different. For example, licenses often are used when resolving assertions of infringement of a patent or patents. Covenants not to sue, on the other hand, often are used when business units, product lines, or divisions are sold, acquired, or spun off into separate stand-alone entities. The distinction between, and legal effect of, licenses and covenants not to sue has been

---

[1] The parties have filed statements with the Court consenting to the filing of *amicus curiae* briefs. No counsel for a party authored this brief in whole or in part, and no counsel or party made a monetary contribution intended to fund the preparation or submission of this brief. No person other than *amicus curiae*, its members, or its counsel made a monetary contribution to its preparation or submission.

recognized by the Federal Circuit and commentators. *See, e.g., Jacobs v. Nintendo of America, Inc.*, 370 F.3d 1097, 1101 (Fed. Cir. 2004) ("If all that Jacobs intended to do through the settlement agreement was to free Analog of its liability for infringement, . . . the covenant not to sue would have been fully sufficient to serve that purpose. Paragraph 3, however, goes much further by granting Analog an affirmative right to engage in the manufacture and sale . . .."); Joseph Yang, *Advanced Patent Licensing: What You Need to Know Before Licensing Your Patent 2007, Joint Venture And Consulting Agreements*, Practising Law Institute Patents, Copyrights, Trademarks, and Literary Property Course Handbook Series, May-June 2007, at 85-87 ("In general there are four types of IP grants: (a) an assignment (e.g., conveyance of ownership); (b) an exclusive license; (c) a nonexclusive license; and (d) a covenant not to sue. Each of these grant types is characterized (indeed, defined) by a certain set of attributes."); Herbert A. Stern, *Intellectual Property Licensing in Today's "E-conomy", Software Licensing: Custom Software Licensing From the Licensee's Perspective*, ALI-ABA Course of Study, May 29-30, 2003, at 34-35 ("Frequently, the developer objects to such a broad grant of rights (a license), and is willing to grant only a covenant not to sue, which is less desirable to your client because the grant is personal, and is not binding on successors of the developer or enforceable by assignees of your client."); James H. Davis et al., *Going International: Fundamentals of International Business Transactions, The Technology License Agreement*, ALI-ABA Course of Study, July 8, 1996, at 170 ("A nonexclusive license simply is a promise by the patent owner not to sue the licensee.

However, a nonexclusive license may again be distinguished from a covenant not to sue — a personal promise which may not run with later transfers of the patent.").

Motorola also purchases, from licensed suppliers, components for assembly into Motorola equipment and products. Assertions are often made against Motorola that the use of such components with a telecommunication network infringes upon the patent rights of others. Therefore, Motorola will benefit from the Court's clarification of the patent exhaustion doctrine in this case.

SUMMARY OF ARGUMENT

Under the Court's precedent, Intel's licensed sales of microprocessors and chipsets exhausted LGE's patent rights. The scope of the question presented is narrowly focused to determine the exhaustion effect of Intel's post-license sales under the LGE-Intel license. The scope of the question presented does not encompass other types of agreements that may, or may not, grant or convey patent rights, such as covenants not to sue and releases. Thus, the Court should limit its holding in this case only to the exhaustion effect under a license.

ARGUMENT

I. Motorola Supports Petitioners' Positions With Respect To The Question Presented.

In the instant action, LGE granted Intel a license and a release. The question presented, however, is limited to sales under the LGE-Intel *license* and whether sales made *subsequent to* the license exhausted LGE's patent rights:

> Whether the Federal Circuit erred by holding, in conflict with decisions of this Court and other courts of appeals, that respondent's patent rights were not exhausted by its license agreement with Intel Corporation, and Intel's subsequent sale of product under the license to petitioners.

Petitioner's Opening Br. at i. Consequently, given the limited scope of the question presented, it would be prudent for the Court to defer any decision on the patent exhaustion effect, if any, of other types of agreements until the issue is squarely presented.

With respect to the license, Intel's sale of microprocessors and chipsets pursuant to the LGE-Intel license exhausted LGE's patent rights. Petitioners correctly rely on *United States v. Univis Lens Co.*, 316 U.S. 241 (1942), for the proposition that Intel's sale of products that embody essential features of LGE's asserted patents and have no other substantial noninfringing use but to be combined with other articles, the combination of which infringes LGE's patents, exhausts the patents. Petitioners' Opening Br. at 23-25, 33-35.

Similarly, the Court's holding in *Mitchell v. Hawley*, 83 U.S. (16 Wall.) 544 (1872), was based on a lack of authority to sell patented machines, not language purporting to limit the use of the machines. Petitioners' Opening Br. at 17-19; *Mitchell*, 83 U.S. at 551 ("[The seller] was only a licensee and never had any power to sell a machine so as to withdraw it indefinitely from the operation of the franchise secured by the patent."). And, consequently, *Mitchell* is not contrary to the Court's holding in cases such as

Adams v. Burke, 84 U.S. (17 Wall.) 453, 456-57 (1873) ("[T]herefore, . . . we hold that in the class of machines or implements we have described, when they are once lawfully made and sold, there is no restriction on their *use* to be implied for the benefit of the patentee or his assignees or licensees."), that stand for the well-accepted proposition that

> the purpose of the patent law is fulfilled with respect to any particular article when the patentee has received his reward for the use of his invention by the sale of the article, and that once that purpose is realized the patent law affords no basis for restraining the use and enjoyment of the thing sold.

Univis Lens, 316 U.S. at 251 (citing cases). In other words, under the Court's precedent once the first sale occurs a patentee no longer has any patent rights against the article. For this reason, when patent exhaustion applies the owner of the purchased item does not need a license, implied or otherwise, to use the purchased item.

LGE's attempt to contract around the patent exhaustion doctrine with a license to Intel purportedly limiting the use rights conveyed to Intel's customers is an impermissible attempt to use the patent laws to extract a second payment from the vertical distribution chain. Petitioners' Opening Br. at 46-54; *see also Motion Picture Patents Co. v. Universal Film Mfg. Co.*, 243 U.S. 502, 516 (1917) ("[I]t is not competent for the owner of a patent . . . to send its machines forth into the channels of trade of the country subject to conditions as to use or royalty to be paid, to be imposed thereafter at the discretion

of such patent owner."). Consequently, if the Federal Circuit's line of precedent that culminated in the decision below is allowed to stand, the patentee will — by design — be allowed to extract a royalty at various and distinct vertical stages in the distribution chain. This type of inefficient "double-dipping" is what the Court's exhaustion doctrine prohibits.

II. The Court Should Not Decide What Patent Exhaustion Effect, If Any, The Release LGE Granted To Intel As Part Of The License Agreement Has On Products Intel Sold Pre-Release.

As stated above, the LGE-Intel agreement at issue in this case granted a prospective license and a retroactive release to Intel. Although the fact of an LGE release to Intel is clear, due to a protective order the exact terms of the release are not. *See* Respondent's Cert Opp'n Br., 2007 WL 760215, *6 n.3 (Mar. 9, 2007) (quoting CAFC JA3621 ("'Whereas Intel desires to acquire a license and a release . . .'"; "'Whereas LGE is willing to grant a license and a release under the Patent License . . .'")).

The existence of the Intel release is consistent with LGE's assertion of infringement against Intel prior to the consummation of the LGE-Intel agreement. *See, e.g.*, Petitioners' Opening Br. at 8. As a result, it is reasonable to infer that Intel sold microprocessors and chipsets prior to the date it entered into the licensing arrangement with LGE. Moreover, the record demonstrates that Petitioners purchased some portion of the Intel microprocessors and chipsets they combined with non-Intel products prior to the consummation of the LGE-Intel license.

See, e.g., LG Electronics, Inc. v. Asustek Computer, Inc., 248 F. Supp. 2d 912, 914 (N.D. Cal. 2003) ("[S]everal days prior to entering into the LGE-Intel License, Intel sent a letter to all its customers, including Defendants, informing them that its license with LGE 'does not extend, expressly or by implication to any product that you may make by combining an Intel product with any non-Intel product.'"); *accord* Petitioners' Opening Br. at 9 ("Pursuant to its agreement with LGE, and after many of the sales at issue here had already occurred, Intel sent the demanded 'notice' letter to Quanta."). Consequently, at least some portion of the microprocessors and chipsets placed in the accused products in this case were purchased from Intel when Intel did not have authorization under LGE's patents — at least at the time the sales were made — to sell the microprocessors and chipsets.

This Court should not decide the patent exhaustion effect, if any, of the release contained in the LGE-Intel license because the issue is not fairly included in the question presented. *Yee v. Escondido*, 503 U.S. 519, 535 (1992) ("[W]e ordinarily do not consider questions outside those presented in the petition for certiorari."); Supreme Court Rule 14.1(a) ("Only the questions set out in the petition, or fairly included therein, will be considered by the Court.").

Without additional facts, it is unclear whether Intel's pre-license sales to Petitioners were unauthorized and if any such sales would exhaust LGE's patent rights. The record is not sufficiently developed to ascertain all of the facts necessary to render a decision on what, if any, effect LGE's

release to Intel had on Intel's pre-license sales of microprocessors and chipsets to Petitioners. Appropriately, these pre-license sales are not at issue in this appeal.

Similarly, the question presented also does not encompass other types of agreements that might grant or convey patent rights, such as a covenant not to sue. There are significant differences between a license, such as the one in this case, and a covenant not to sue. *See, e.g., Hilgraeve Corp. v. Symantec Corp.*, 265 F.3d 1336, 1346 (Fed. Cir. 2001) (finding covenant not to sue personal in nature, *i.e.*, non-transferable). And, moreover, to our knowledge, the Court has not decided what impact a release or covenant not to sue may have, if any, on the exhaustion of a patent for items potentially covered by a release or covenant not to sue. Rather, the Court's precedent involved license agreements not covenants not to sue or releases. *See Univis Lens*, 316 U.S. 241 (reviewing license); *Ethyl Gasoline Corp. v. United States*, 309 U.S. 436 (1940) (reviewing license); *General Talking Pictures Corp. v. Western Electric Co.*, 304 U.S. 175 (1938) (reviewing license); *United States v. General Electric Co.*, 272 U.S. 476 (1926) (reviewing license); *Boston Store v. American Graphophone Co.*, 246 U.S. 8 (1918) (reviewing license); *Motion Picture Patents*, 243 U.S. 502 (reviewing license); *Straus v. Victor Talking Machine Co.*, 243 U.S. 490 (1917) (reviewing license); *Bauer v. O'Donnell*, 229 U.S. 1 (1913) (reviewing license); *Henry v. A.B. Dick Co.*, 224 U.S. 1 (1912) (reviewing license); *Bement v. National Harrow Co.*, 186 U.S. 70 (1902) (reviewing license); *Adams*, 84 U.S. (17 Wall.) 453 (reviewing license); *Mitchell*, 83 U.S. (16 Wall.) 544 (reviewing license); *Bloomer v.*

Millinger, 68 U.S. (1 Wall.) 340 (1864) (reviewing license); *Bloomer v. McQewan*, 55 U.S. (14 How.) 539 (1853) (reviewing license); *see also Keeler v. Standard Folding Bed Co.*, 157 U.S. 659 (1895) (reviewing partial assignment); *Hobbie v. Jennison*, 149 U.S. 355 (1893) (reviewing partial assignment). Thus, Motorola respectfully submits that given the narrowness of the question presented and the lack of a developed record below regarding the release, and distinctions with respect to covenants not to sue, the Court should leave the question of what impact other types of agreements may or may not have on patent exhaustion for another day.

CONCLUSION

For the foregoing reasons, the Court should reverse the judgment of the Court of Appeals for the Federal Circuit, and in so doing, the Court should limit its holding to products sold pursuant to a license agreement.

Respectfully submitted,

RUSSELL E. LEVINE, P.C.
Counsel of Record
CHRISTOPHER R. LIRO
DAVID W. HIGER
KIRKLAND & ELLIS LLP
200 E. Randolph
Chicago, IL 60601
(312) 861-2000

Counsel for Amicus Curiae

November 13, 2007

56537 J
34pgp

31

No. 06-937

IN THE

Supreme Court of the United States

QUANTA COMPUTER, INC., QUANTA COMPUTER USA, INC., Q-LITY COMPUTER, INC.,

Petitioners,

v.

LG ELECTRONICS, INC.,

Respondent.

ON WRIT OF CERTIORARI TO THE UNITED STATES COURT OF APPEALS FOR THE FEDERAL CIRCUIT

BRIEF OF MPEG LA LLC AS *AMICUS CURIAE* IN SUPPORT OF RESPONDENT

KENNETH RUBENSTEIN
ANTHONY C. COLES
PROSKAUER ROSE LLP
1585 Broadway
New York, New York 10036
(212) 969-3000

GARRARD R. BEENEY*
JAMES T. WILLIAMS
ANN MCLEAN JORDAN
STANLEY A. ROBERTS
SULLIVAN & CROMWELL LLP
125 Broad Street
New York, New York 10004
(212) 558-4000

Counsel for Amicus Curiae MPEG LA LLC

December 10, 2007

* Counsel of Record

TABLE OF CONTENTS

Page

STATEMENT OF INTEREST OF *AMICUS CURIAE* 1

STATEMENT OF THE CASE 6

SUMMARY OF ARGUMENT 8

ARGUMENT 12

I. PETITIONERS' "AUTOMATIC EXHAUSTION" RULE IS NOT SUPPORTED BY THE PATENT STATUTE OR THE DECISIONS OF THE COURT. 12

A. The Patent Statute Does Not Support an Automatic Exhaustion Rule; the Statute Authorizes Multiple Licenses at Different Stages of Product Distribution. 12

B. Patent Rights Are Exhausted Only After "Authorized" Sales. 16

II. PETITIONERS' MANDATORY EXHAUSTION RULE WOULD INTERFERE WITH MANY EFFICIENT TRANSACTIONS. 23

CONCLUSION 29

TABLE OF AUTHORITIES

Page(s)

Cases

Adams v. *Burke*,
84 U.S. (17 Wall.) 453 (1873) 17, 18

American Tobacco Co. v. *Patterson*,
456 U.S. 63 (1982) 14

Aro Manufacturing Co. v. *Convertible Top Replacement Co.*,
377 U.S. 476 (1964) 16

Bloomer v. *Millinger*,
68 U.S. (1 Wall.) 340 (1864) 22

Continental Paper Bag Co. v. *Eastern Paper Bag Co.*,
210 U.S. 405 (1908) 20

Crown Die & Tool Co. v. *Nye Tool & Machine Works*,
261 U.S. 24 (1923) 20

Dawson Chemical Co. v. *Rohm & Haas Co.*,
448 U.S. 176 (1980) 14

E. Bement & Sons v. *National Harrow Co.*,
186 U.S. 70 (1902) 17, 19, 21, 22

General Talking Pictures v. *Western Electric Co.*,
304 U.S. 175 (1938) 19, 20

General Talking Pictures v. *Western Electric Co.*,
305 U.S. 124 (1938) 19, 20

Page(s)

Heaton-Peninsular Button-Fastener Co. v. *Eureka Specialty Co.*, 77 F. 288 (6th Cir. 1896) 17

Keeler v. *Standard Folding-Bed Co.*, 157 U.S. 659 (1895) 18

Mitchell v. *Hawley*, 83 U.S. (16 Wall.) 548 (1872) 15-16, 19

Motion Picture Patents Co. v. *Universal Film Manufacturing Co.*, 243 U.S. 502 (1917) 20

United States v. *General Electric Co.*, 272 U.S. 476 (1926) 17, 21

United States v. *U.S. Gypsum Co.*, 333 U.S. 364 (1948) 21

United States v. *Univis Lens Co.*, 316 U.S. 241 (1942) 18

Waterman v. *Mackenzie*, 138 U.S. 252 (1891) 16, 20

Zenith Radio Corp. v. *Hazeltine Research, Inc.*, 395 U.S. 100 (1969) 20

Page(s)

Statutes and Regulations

35 U.S.C. 154(a) 16

35 U.S.C. 271(d) 9, 12-14

Other Authorities

Robert P. Merges & Richard R. Nelson, *On the Complex Economics of Patent Scope*, 90 Colum. L. Rev. 839 (May 1990) 27

STATEMENT OF INTEREST OF *AMICUS CURIAE*[1]

MPEG LA LLC ("MPEG LA") is the administrator of worldwide patent pools for numerous standardized technologies, including the patent pool for the MPEG-2 digital compression technology (the "MPEG-2 Pool").[2] MPEG-2 is a core platform technology used in every DVD player, DVD-enabled personal computer, DVD movie disc, digital cable box, and satellite television receiver sold in the United States and in certain other locations, as well as in all HDTV television sets.[3] Collectively, the sales of these products account for billions of dollars

---

[1] Pursuant to Rule 37.6, counsel certifies that this brief was not authored, in whole or in part, by counsel for any party, and no person or entity other than *amicus* and its counsel contributed monetarily to the preparation or submission of the brief. Both Petitioners and Respondent have consented to the filing of any *amicus* brief and their letters of consent have been filed with the Clerk of the Court.

[2] MPEG LA currently administers nine patent pool programs. Two additional programs are in active development. *See* www.mpegla.com (last visited December 6, 2007).

[3] MPEG-2, adopted jointly by the International Organization of Standards (an entity organized under the auspices of the United Nations) and the International Telecommunications Union-Telecommunications Sector, is a flexible and open standard which eliminates redundant information from a digital video signal to conserve transmission resources and storage space on storage media such as optical discs. Without a compression technology such as MPEG-2, a two-hour movie would require approximately six or seven DVD discs.

of consumer spending every year. The vast majority of these products are licensed through the MPEG-2 Pool. So-called next-generation digital video formats, such as Blu-ray® Disc and HD DVD, also rely on MPEG-2 patents, as does the digital broadcast standard (ATSC) mandated by the Federal Communications Commission. The MPEG-2 Pool license offered by MPEG LA provides a convenient, cost-effective and procompetitive means by which manufacturers wishing to make MPEG-2 products can obtain in a single license the right to use hundreds of patents essential to MPEG-2. Patent licenses such as the MPEG-2 Pool license, which has been signed by more than 1,300 manufacturers worldwide, may be implicated by a ruling in this case.

The MPEG-2 Pool was created in 1997 when Columbia University, Fujitsu Limited, General Instrument Corporation, Matsushita Electric Industrial Co., Ltd., Mitsubishi Electric Corporation, Philips Electronics N.V., Scientific-Atlanta, Inc., and Sony Corporation — all of which held patents essential to the MPEG-2 technology — agreed to license their patents on standard nondiscriminatory terms in a single patent portfolio license. The formation of the MPEG-2 Pool was a complex undertaking. Among other issues, the participating patentees had to agree on standard license terms, license duration and rates, and division of any royalties received. Once formed, however, the MPEG-2 Pool yielded a number of procompetitive benefits recognized by, among others, the Antitrust Division of the United States Department of Justice

("Antitrust Division") and the competition authorities of the European Union.[4]

Pivotal among the procompetitive benefits of the MPEG-2 Pool, and many other patent pools administered by MPEG LA, is the elimination of many patent "blocking positions" that could be asserted against any user of a technology by any patentee owning essential patents. Other benefits of the MPEG-2 Pool and other patent pools include: (1) reducing the uncertainty of whether patent licenses are in fact being made available by patent owners; (2) reducing the royalties that likely would

---

[4] The MPEG-2 Pool received a Business Review Letter from the Antitrust Division stating that the MPEG-2 Pool is

> likely to provide significant cost savings to Licensors and licensees alike, substantially reducing the time and expense that would otherwise be required to disseminate the rights to each MPEG-2 Essential Patent to each would-be licensee. Moreover, the proposed agreements that will govern the licensing arrangement have features designed to enhance the usual procompetitive effects and mitigate potential anticompetitive dangers.

Letter of Joel I. Klein, Esq., Assistant Attorney General, Department of Justice, to Garrard R. Beeney, Sullivan & Cromwell LLP (June 26, 1997) *available at* http://www.usdoj.gov/atr/public/busreview/215742.htm ("Business Review Letter"). The MPEG-2 Pool also received a comfort letter from the competition authorities of the European Union. Letter of John Temple Lang, Director, European Commission, Directorate-General IV-Competition, to Garrard R. Beeney, Sullivan & Cromwell LLP (Dec. 14, 1998) (on file with author).

be payable if each essential patent holder licensed its patent(s) on its own rather than in a pool; (3) reducing the substantial cost for each licensee of determining on its own the identity of essential patent holders from whom a license must be obtained; (4) reducing other transaction costs of negotiating and executing multiple licenses; (5) reducing the cost of providing licenses, thereby allowing licenses to be offered at a lower price; and (6) offering the same royalty to all interested licensees on nondiscriminatory terms so that no entity manufacturing or selling MPEG-2 products will be disadvantaged as a result of entering into an MPEG-2 patent license. *See* Business Review Letter at 9-10.

In order to encourage patentees to provide these procompetitive benefits and eliminate, to the extent possible, "patent thickets" that would retard the adoption of new technologies and the offering of innovative products, the MPEG-2 Pool — and other pool licenses — rely on certain license structures potentially implicated by the issues in this case. As explained below, those license structures enable, through conditional licenses, the limited use of patented inventions at certain stages of the product distribution chain, while preserving the ability to collect royalties at other stages and to enforce patent rights by way of claims of infringement.

In MPEG-2 technology — as with many, if not all, standard technologies — a single patent claim may be infringed by activities at various levels of the distribution chain for a single product. From the

fabrication of a chip, to its incorporation in a circuit board, to the manufacture, sale and use of a finished product, each activity may constitute a separate act of infringement of the same patent claim. While each independent party in the product chain may desire a license to avoid allegations regarding infringement, a patent pool licensing program with many licensees will typically direct its royalty-bearing licensing activities to a single stage of the distribution process. By focusing on a single point in the distribution chain, confusion is avoided over what product is and is not licensed. The MPEG-2 Pool accomplishes this by generally providing royalty-bearing licenses only for products in the form in which they are used by consumers. In order to provide "comfort," however, to others in the distribution chain who are engaged in infringing activities, the MPEG-2 Pool also offers royalty-free limited licenses to intermediate product makers, *i.e.*, those who provide one or more components of finished products. While offering licenses under the same patents to both component manufacturers and finished product sellers who incorporate such components into a finished product, MPEG LA collects only a single royalty for each product.

In addition to facilitating patent pools, the ability to license patents at one stage of the distribution chain while retaining the right to collect royalties on the same patents at other stages is crucial in many other respects. *See* pages 23-26, *infra*. An automatic exhaustion rule such as that advocated by Petitioners would needlessly hinder the

ability of patentees to provide patent pools and the procompetitive benefits they offer.

MPEG LA regularly presents its views on important public policy issues that impact patent rights, competition and the technology industries. In that context, MPEG LA is appearing as *amicus curiae* in this Court in support of Respondent.

STATEMENT OF THE CASE

Amicus curiae MPEG LA states the case as follows insofar as it is relevant to MPEG LA's argument:

1. Intel Corporation ("Intel") and Respondent LG Electronics, Inc. ("LG") entered into a License and a Master Agreement providing, among other things, the following:

> a. Intel shall have "the right to 'make, use, sell (directly or otherwise), offer to sell, import or otherwise dispose of all Intel Licensed Products." Pet'rs Br. at 8 (citing JA 145-73 (¶ 3.2(a))).
>
> b. No license "is granted by either party hereto . . . to any third party for the combination by a third party of Licensed Products of either party with items, components, or the like acquired . . . from sources other than a party hereto, or for the use, import, offer for sale or sale of such combination." Pet'rs Br. at 8 (citing JA 164 ¶ 3.8)).

c. "Notwithstanding anything to the contrary contained in this Agreement, the parties agree that nothing herein shall in any way limit or alter the effect of patent exhaustion that would otherwise apply when a party hereto sells any of its Licensed Products." Pet'rs Br. at 8 (citing JA 164 (¶ 3.8)).

d. Intel was required to send a "notice" to its customers informing them that they did not receive any "license" from LG to use products purchased from Intel in any product that combines "an Intel product with any non-Intel product." Pet'rs Br. at 8-9 (citing JA 198).

2. LG did not sell any articles at issue in this case. Rather, LG acted only in the capacity of licensor and contracting party. All sales of allegedly infringing articles were made by the licensee, Intel, and its customers.

3. Under the claims of the LG patents at issue, Intel, by its sale of components, would be a contributory infringer but for its license from LG. Intel, but for its license, would contributorily infringe by manufacturing and selling components having no substantial non-infringing use. The Intel components are subsequently combined with non-Intel products by Petitioners to form a product that independently infringes LG's patents.

4. In proceedings below, the lower courts did not explicitly determine whether (1) the various

relevant provisions in the LG-Intel License and Master Agreement constituted a full grant of LG's patent rights which were then limited by contractual undertakings or, conversely, (2) LG granted to Intel a conditional license of less than all of LG's patent rights. The record is unclear as to how this issue should be resolved.

SUMMARY OF ARGUMENT

Petitioners urge this Court to adopt what is essentially an "automatic exhaustion" rule that could eliminate many procompetitive and customary transactions, and which would ignore the desires of contracting parties. Under Petitioners' proposed rule, a patentee could not license a chip maker or sell a chip under terms that reflect the agreed upon value of that transaction while retaining the right to assert reserved patent rights with respect to the finished product. A patentee also could not license a third party to conduct research only while reserving other parts of the patent monopoly, such as the right to sell, for a later time if and when an infringing product was developed and sold. For at least the reasons stated below, the Court should not adopt an exhaustion rule that automatically applies upon the sale of a patented article. Rather, patentees and their contracting parties should be free to sell products or enter into licenses that reflect the bargain they have reached for the particular rights they wish to offer and accept. If a counterparty neither needs nor wants to pay to acquire the entire patent monopoly of a patentee, no rule should require it.

1. Petitioners' proposed rule directly conflicts with the clear language of the patent statute, and *no* language of the statute is cited in support of the proposed rule. Section 271(d) of the patent statute, 35 U.S.C. § 271(d), explicitly authorizes a patent holder to seek additional royalties from a licensee's customers when the licensee sells components that but for the license would contributorily infringe. In this case, LG is authorized by Section 271(d) to seek relief for infringement or contributory infringement against finished product sellers such as Petitioners, despite having licensed Petitioners' supplier, Intel, to practice the patents. Petitioners' proposed rule would render this section of the patent statute meaningless.

2. The Court's decisions do not support Petitioners' "automatic exhaustion" rule. As the Court has long instructed, patent rights are exhausted upon an "authorized" sale. A sale or license which specifically does not transfer certain rights inherent in the patent grant is not "authorized" to the extent of those patent rights specifically retained by the patentee, whether acting as seller or licensor. Similarly, a sale made by a licensee or purchaser that either breaches the licensing or sales agreement, or purports to sell more of a property interest in the patented good than the licensee owns, is not authorized and may be addressed by the patentee asserting that part of the patent monopoly not yet conveyed. Consistent with Section 271(d), the Court has never held that a patentee who grants only part of the make, use and

sell rights inherent in a patent may not later enforce that portion of the patent right retained against purchasers of patented articles.

While Petitioners assert that the Court has allowed enforcement of restrictions placed on licensee-sellers but not restrictions placed by patentee-sellers, the Court's cases with respect to patentees selling patented articles and licensees selling such articles are not in conflict. The distinction asserted by Petitioners requiring an intervening licensee should not be adopted by the Court. The patent statute makes no such distinction between a patentee-seller and a licensee-seller, and such a distinction could easily be overcome.[5] Rather, the distinction inherent in the patent statute and consistent with the Court's interpretation of the statute is that patent rights are exhausted upon the authorized sale of an article, but only to the extent of such authorization. If certain patent rights inherent in the patent are clearly retained in connection with a transfer or license, such transfer or later sale by the licensee cannot and does not exhaust those rights retained by the patentee.

Consistent with these cases and the patent statute, the Court regularly has held that a patent holder is not required to give up all of its monopoly

---

[5] We question whether such a meaningless dichotomy would simply encourage patentees to place patent ownership in one entity, license an affiliate, and then place restrictions on products sold by the affiliate.

in a single transaction, nor must a licensee and/or purchaser pay for more than that part of the patent monopoly it desires in any single transaction. Licenses of partial rights are regularly upheld, and parties should remain free to structure transactions as they deem necessary. Petitioners themselves concede that patent licenses "can indeed carry conditions" and that "breach of those conditions can justify an infringement suit." Pet'rs Br. at 13.

3. Petitioners' automatic exhaustion rule is not supported by policy or economics. Instead of facilitating innovation, the very purpose of the patent grant, Petitioners' rule will stifle innovation and produce inefficient results.

Moreover, Petitioners' rule does not serve to reduce costs or prevent "super-monopoly" royalties. Only one royalty amount can be extracted from a patent monopoly. It is immaterial whether that royalty amount is paid by a single licensee or divided among several. A patentee is not able to extract some sort of "super-monopoly" royalty by dividing the payment over different steps in the product lifecycle. There is no evidence to support the notion that LG could or did pursue or obtain such a "super-monopoly" royalty. In fact, Petitioners concede that there is only one royalty sum payable for the license of the patent monopoly, regardless of the number of licensees which share the rights inherent in the patent grant.

ARGUMENT

I. PETITIONERS' "AUTOMATIC EXHAUSTION" RULE IS NOT SUPPORTED BY THE PATENT STATUTE OR THE DECISIONS OF THE COURT.

A. The Patent Statute Does Not Support an Automatic Exhaustion Rule; the Statute Authorizes Multiple Licenses at Different Stages of Product Distribution.

Petitioners urge the Court to drastically broaden the doctrine of patent exhaustion despite clear statutory language to the contrary. LG's claims of infringement against the Petitioners in this case, which Petitioners erroneously argue should be foreclosed, are, in fact, explicitly permitted by the patent statute. *See* 35 U.S.C. § 271(d).

Section 271(d) specifically allows for precisely the conduct LG exhibited in this case:

> No patent owner otherwise entitled to relief for infringement or contributory infringement of a patent shall be denied relief or deemed guilty of misuse or illegal extension of the patent right by reason of his having done one or more of the following: (1) derived revenue from acts which if performed by another without his consent would constitute contributory infringement of the patent; (2) licensed or authorized another to perform acts which if performed without his consent would constitute contributory infringement of the patent . . . .

35 U.S.C. § 271(d).[6] The statute thus specifically provides that a patent owner may seek royalties on the same patent for both a contributory infringer and a direct infringer.[7]

The language of the patent statute controls here. In this case, LG licensed another (Intel) to perform an act (sell chips) which, if performed without LG's consent, would constitute contributory infringement of the patent by Intel. Section 271(d) specifically provides that LG's licensing of the Intel chips does not foreclose the possibility of seeking relief against others who combine that chip into another product by way of an infringement action. The patent statute thus explicitly authorizes LG to seek additional royalties from Intel's customers notwithstanding the fact that Intel has paid a royalty to be free of contributory infringement.

In the Brief for the United States as *Amicus Curiae* supporting *certiorari* ("Gov't Cert. Br."), the Government conceded that Section 271(d) "might be construed to entitle a patentee in respondent's position to relief," Gov't Cert. Br. at 20 n.7, but argued that such a conclusion could be drawn only if

---

[6] For ease of reference, the full text of the statute appears in the appendix to the Brief for Respondent.

[7] In addition to making clear that a patentee may license and obtain royalties at different steps of the distribution chain, the statute also and independently provides that it is neither misuse nor an extension of the patent monopoly to seek such royalties.

the statute was read "in isolation, and without an understanding of its context and purpose." *Id.*

Regardless of "context and purpose" (see below), the language of the patent statute is clear. The Court has long expressed reluctance at divining the "intent" of a statute when the legislative language is unambiguous. *See, e.g., Am. Tobacco Co.* v. *Patterson,* 456 U.S. 63, 68 (1982).

Moreover, there is no evidence to support the Government's argument that the statute merely addresses "the relationship between the doctrines of patent misuse and contributory infringement." Gov't Cert. Br. at 20 n.7. While the statute provides that behavior such as that engaged in by LG here should not be deemed misuse, the statute also provides in the disjunctive ("or") that a patentee such as LG also should not be denied relief under the patent laws because of its upstream license to a contributory infringer such as Intel.[8]

Petitioners avoid any reference to this statutory language. Instead of citing the patent statute, Petitioners speculate that a mandatory first sale exhaustion rule "makes sound economic and policy sense." Pet'rs Br. at 15. According to Petitioners, a rule imposing the obligation on a patentee to part with the entire patent monopoly in a

---

[8] *Dawson Chem. Co.* v. *Rohm & Haas Co.*, 448 U.S. 176, 200-13 (1980), cited by the Government, does not address the issue raised here.

single transaction "minimizes transaction costs by forcing the patent owner to exact the full value of its patent rights in one negotiation with the first purchaser, which can then share the burden with the rest of the distribution chain by charging a higher price." *Id.* In reality, such a rule, far from advancing efficiency, would require contracting parties to speculate about the value to strangers of certain rights, and cause a purchaser/licensee to price and pay for rights it neither requires nor desires. This proposed rule would restrain a patentee's well-established right to divide its monopoly among several infringers in the product distribution chain, taking into account the value to each licensee. *See also* pages 23-25, *infra*.

The patent statute simply does not require a patentee to part with its entire patent monopoly and receive the entire royalty therefrom in one and only one transaction. The statute clearly contemplates licenses of partial rights, in separate transactions with separate parties, involving the same allegedly infringing articles. Petitioners' proposed automatic exhaustion rule runs afoul of this clear legislative language.[9]

---

[9] Petitioners' automatic exhaustion rule not only runs afoul of the plain language of the patent statute, but it also violates the well-settled rule that a licensee cannot convey in a subsequent sale more rights than it possesses. In *Mitchell* v. *Hawley*, 83 U.S. (16 Wall.) 548 (1872), this Court held that "[n]o one in general can sell personal property and convey a valid title to it

B. Patent Rights Are Exhausted Only After "Authorized" Sales.

"A patent-right is incorporeal property, not susceptible of actual delivery or possession . . . ." *Waterman* v. *Mackenzie*, 138 U.S. 252, 260 (1891). As such, and in accord with traditional notions of property rights, patent law grants a patent holder the "right to exclude others from making, using, offering for sale, or selling the invention . . . ." 35 U.S.C. § 154(a). A patentee's "title is exclusive, and so clearly within the constitutional provisions in respect of private property that he is neither bound

---

unless he is the owner or lawfully represents the owner. *Nemo dat quod non habet* . . . . [N]o one can convey . . . any better title than he owns." *Mitchell*, 83 U.S. at 550. Accordingly, a manufacturing licensee cannot confer broader rights than it has been granted by the patent holder. *See, e.g., Aro Mfg. Co.* v. *Convertible Top Replacement Co.*, 377 U.S. 476, 484 (1964). When a patentee does not convey its full patent monopoly in a sale or license, the purchaser/licensee cannot convey the patented article with greater patent rights than it obtained. Petitioners' argument, that a patent is necessarily exhausted when a patentee or manufacturing licensee sells a product – even in violation of the explicit sale or license terms that accompany such sale – violates this fundamental tenet of property law. Simply put, if LG did not convey to Intel the full patent monopoly LG possessed, Intel could not convey to its customers greater patent rights than it was permitted to convey. There is no doubt that the patentee and its contracting party may elect to enforce lawful restrictions through contract law rather than patent law, but there is no support for the rule that such restrictions are limited to contract law.

to use his discovery himself nor permit others to use it." *Heaton-Peninsular Button-Fastener Co.* v. *Eureka Specialty Co.*, 77 F. 288, 295 (6th Cir. 1896) (cited with approval in *E. Bement & Sons* v. *National Harrow Co.*, 186 U.S. 70, 90 (1902)).

Consistent with these principles, the Court for many years has instructed that under the doctrine of patent exhaustion, the patentee's authorized and *unconditional* sale of a patented article into the stream of commerce exhausts the patent holder's patent monopoly. *See, e.g., United States* v. *General Electric Co.*, 272 U.S. 476, 489 (1926). This Court, however, has never held that rights specifically withheld in a transaction were nonetheless transferred and exhausted.

In *Adams* v. *Burke*, 84 U.S. (17 Wall.) 453 (1873), the patentee sought to enforce a geographical restriction on the use of the patented article against Burke, who took title without any such restriction. While the geographical restriction was in an agreement between the patentee and his assignee, it was not in the sale contract to Burke. Burke's purchase and subsequent use outside the geographical restriction recited in an earlier transaction to which Burke was not a party was deemed not to constitute infringement as Burke's right to use was conveyed without any such limitations. While the restrictions could not be enforced against Burke, whose title was not "encumbered," the Court nevertheless stated that grants of patent rights may be restricted, divided and offered to different licensees: the "right to

manufacture, the right to sell, and the right to use are each substantive rights, and may be granted or conferred *separately* by the patentee." *Id.* at 456 (emphasis added).

Similarly, in *Keeler* v. *Standard Folding-Bed Co.*, 157 U.S. 659 (1895), a geographical restriction was *not* recited in the sale agreement to Keeler, against whom the restriction was attempted to be enforced. The Court ruled that Keeler was authorized by his unrestricted purchase to sell wherever he chose, and vacated an award of damages. *Id.* at 666.

In *United States* v. *Univis Lens Co.*, 316 U.S. 241 (1942), the patentee sought to impose price restrictions on parties which had taken title to the lens products *after* all royalties due were paid by parties earlier in the title chain. Regardless of whether *Univis* is read as an "antitrust case" or a "patent case," the decision is consistent with the notion that restrictions may not be enforced against parties after authorized sales.[10]

---

[10] Moreover, *Adams*, *Keeler*, *Univis*, and other cases which denied enforcement of alleged restrictions neither ruled on nor contemplated the circumstances here in which LG's patents are actually infringed by the combination of the licensed Intel component with a separate non-licensed component. Pet'rs Br. at 8 (citing JA 164 (¶ 3.8)); *id.* at 8-9 (citing JA 198). It may be one thing to find exhaustion from an authorized sale, but it is wholly another to deprive a patentee of its right to allege direct infringement by a third party.

The rule regarding exhaustion from authorized sales was stated in *Mitchell* v. *Hawley*, 83 U.S. (16 Wall.) 548 (1872). In *Mitchell*, the Court ruled that restrictions on purchases from the patentee could not be enforced, but limited such rule to unconditional sales. "[W]here the sale is absolute, and without any conditions, the rule is well settled that the purchaser may continue to use the implement or machine purchased until it is worn out . . . ." *Id.* at 548.

The Court's language limiting exhaustion to "absolute" sales and those without "conditions" was not superfluous. Indeed, in those cases in which the Court has upheld the effort to place restrictions inherent in patent rights on downstream purchasers, the transactions were accompanied by the restrictions at issue. For example, the Court upheld minimum price restrictions set out in the license to defendant in *E. Bement & Sons* because the defendant's sale in violation of those restrictions was, by definition, not authorized. 186 U.S. at 93.

The Court reached a similar conclusion in *General Talking Pictures* v. *Western Electric Co.*, 304 U.S. 175 (1938), *reh'g granted on other grounds*, 305 U.S. 124 (1938). When the customer of a licensee took title to certain amplifiers with restrictions against use in commercial theaters, the Court ruled that the licensee's customer was guilty of infringement because defendant's commercial use

was not authorized.[11] The Court recognized that "[p]latent owners may grant licenses extending to all uses or limited to use in a defined field," 304 U.S. at 181, and went on to hold that defendant's sale in violation of the restriction was the same as if "no license whatsoever had been granted." *Gen. Talking Pictures Corp.* v. *Western Elec. Co.*, 305 U.S. 124, 127 (1938).

In more recent cases, the Court has recognized that a patentee "may assign to another his patent, in whole *or in part*, and may license others to practice his invention." *Zenith Radio Corp.* v. *Hazeltine Research, Inc.*, 395 U.S. 100, 135 (1969) (emphasis added). The Court has regularly recognized the freedom of a patentee to limit others' use and enjoyment of his patent. *See, e.g., Crown Die & Tool Co.* v. *Nye Tool & Machine Works*, 261 U.S. 24, 34 (1923) (listing cases); *Continental Paper Bag Co.* v. *Eastern Paper Bag Co.*, 210 U.S. 405, 424 (1908); *Waterman*, 138 U.S. at 255. As the Court has explained:

> the general rule is absolute freedom in the use or sale of rights under the patent laws of the United States. The very object of these laws

---

[11] *Motion Picture Patents Co.* v. *Universal Film Mfg. Co.*, 243 U.S. 502 (1917) is not to the contrary. In that case, the patentee attempted to impose restrictions beyond the grant of the patent. *Motion Picture Patents* does not stand for the proposition that rights inherent in the patent may not be withheld at the time of a sale.

> is monopoly, and the rule is, with few exceptions, that any conditions which are not in their very nature illegal with regard to this kind of property, imposed by the patentee and agreed to by the licensee for the right to manufacture or use or sell the article, will be upheld by the courts.

E. Bement & Sons, 186 U.S. at 91.

In *United States* v. *U.S. Gypsum Co.*, 333 U.S. 364, 380-82 (1948), the patentee granted many licenses, some for less than all of the rights inherent in the patent. Although the Court found that certain industry-wide license agreements violated the Sherman Act because the agreements, as a whole, were used to control both prices and distribution methods of gypsum, *id.* at 389, the Court took no issue with licenses that granted limited rights to make, use or sell. Moreover, *U.S. Gypsum Co.* left undisturbed the clear holding of *United States* v. *General Electric Co.*, 272 U.S. at 489, that "[t]he owner of a patent may assign it to another and convey . . . an undivided part or share of that exclusive right."

The Court's decisions thus permit a patentee to part with a portion of the patent monopoly, receiving in exchange a portion of the royalty fee, so long as the limiting conditions are explicit, and the restrictions are within the scope of the monopoly and do not contravene another body of law.

Petitioners and various *amici* argue that the holdings in the cases cited above are determined by

whether the defendant has taken title directly from the patentee or from an intervening manufacturer-licensee, but the patent statute makes no such distinction. Rather, the Court's cases stand for the proposition that a restriction may not be imposed after an "authorized sale," but that transfers limited by lawful restrictions are not authorized and are thus enforceable by infringement actions. *Compare Bloomer* v. *Millinger*, 68 U.S. (1 Wall.) 340, 351 (1864) (holding that, after "a valid sale and purchase of the patented machine," that machine "is no longer specially protected by the laws of the United States . . . ."), *with E. Bement & Sons*, 186 U.S. at 91 (finding that "any conditions which are not in their very nature illegal with regard to this kind of property, imposed by the patentee and agreed to by the licensee for the right to manufacture or use or sell the article, will be upheld by the courts.").

Consistent with the patent statute and the Court's holdings, a patentee should not be required to convey the totality of its patent rights in any single transaction, and a clear limitation on the conveyance of those rights — whether the partial grant is accompanied by the patentee's sale of the infringing article — should be enforceable under patent law.[12]

---

[12] While Petitioner and certain *amici* urge this Court to consider rules applicable to a patentee's sale of a patented article, we note that no such facts exist in this case. LG acted as pure licensor; only Intel, the licensee, sold the allegedly

II. PETITIONERS' MANDATORY EXHAUSTION RULE WOULD INTERFERE WITH MANY EFFICIENT TRANSACTIONS.

Nothing in the patent statute or in this Court's decisions suggest that a patentee or its licensee must necessarily part with all patent rights in the first sale of a patented article, provided the transfer of rights is explicitly restricted in a way that does not violate other substantive law. Moreover, there is no valid "policy" reason to create such a rule — which is contrary to the plain language of the statute (see pages 12-14, *supra*) — and there are many reasons to reject it.

As noted at pages 5-6, *supra*, MPEG LA and the patent pool structure it and others employ rely on the ability of patentees to provide licenses at various levels of the product distribution chain to, among other things, clear blocking positions, enable research, and allow upstream component manufacturers to make components without fear of infringement litigation. These licensors nevertheless recover the predominant value of the single patent

---

infringing product. Moreover, we note that certain contractual language may be deemed to constitute the conveyance of all patent rights with contractual restrictions, while other contractual language may be deemed to convey less than all patent rights. There was no finding below as to whether the various provisions of the LG-Intel agreement constitute the former, the latter, or something else.

monopoly at a later stage of the product distribution process from sellers of finished products who may have purchased components from a supplier with a limited license and incorporated them into finished products. This process has, among other things, allowed hundreds of component makers to enter the market on terms that are both certain and acceptable, while at the same time granting more than 1,300 licensees[13] in the MPEG-2 Pool the right to sell higher value finished products under license from MPEG LA.

In addition to adversely affecting these and other procompetitive transactions, Petitioners' mandatory exhaustion rule needlessly interferes with the rights of contracting parties to determine and pay for or sell only those rights they wish to acquire or impart. The right to make and sell a device may have one value, while the right to use that device may have completely different values to different parties. For example, certain patents may have one value to an integrated circuit manufacturer who sells chips for a few dollars, but a different, and substantially higher, value to a company that uses those chips to broadcast major sporting events, like the NFL, to millions of premium television subscribers. Both the chip maker and the broadcaster may infringe the same patent. Requiring the patentee and circuit manufacturer to

---

[13] *See generally* www.mpegla.com (last visited December 6, 2007).

reflect the "use" value to a third party, such as the broadcaster, in their transaction only burdens the patentee-circuit manufacturer transaction with unnecessary complexity.[14]

The argument of Petitioners and certain *amici* that the full value of a patent *must* — notwithstanding the contracting parties' desire to the contrary — be reflected at the first sale of an article by a patentee or its licensee threatens to upset the reasonable expectations and prudent contract negotiations of thousands of parties to patent pools and other licenses who have relied on the ability of the patentee to transfer less than all its rights in a sale or license.

Furthermore, Petitioners and their *amici* offer no valid reason why, for example, an MPEG-2 chip manufacturer must negotiate and "pay" for that part of the patent monopoly it does not need, such as the right to sell or use a DVD player which is manufactured by a third party purchaser of the chip. Nor do Petitioners and their *amici* offer a valid reason why, if two pharmaceutical companies wish to cross-license each other to do research on a particular compound (but not to sell finished products), such a license must include the right to sell any product which contains such compound.

---

[14] The exhaustion rule should be the same whether the patentee offers a conditional license for the chip or sells the chip with a conditional license.

While the adoption of Petitioners' rule would eliminate or retard many efficient transactions, it would not lower licensing costs or create other benefits. As Petitioners eloquently demonstrate, dividing the full value of a patent monopoly among different levels of the distribution chain depending on which rights are desired by which licensee does not add inefficiency or cost. No more than one complete value of the patent monopoly may be collected by the patentee regardless of whether royalties are sought at one step or at multiple steps in the product distribution chain. As Petitioners state:

> A rational patentee cannot obtain more by negotiating separately with the manufacturer, distributor, retailer and consumer than he could have obtained by charging the entire amount to the first party in the chain and relying on it to pass the cost along in the form of higher prices. There is only one monopoly profit to be obtained in any vertical distribution chain.

Pet'rs Br. at 49 (citations omitted). Importantly, there is no evidence whatsoever in this case that supports any claim to the contrary.

There is no sound basis to adopt Petitioners' rule and further burden licensing or sales negotiations which already involve significant

transactions costs.[15] Petitioners' rule would mean that, in addition to a review of patent claims, validity issues, valuations of rights the parties wish to convey and obtain, and other matters, parties to a patent transaction which contemplates a sale of an article also would need to devote significant time and expense to evaluating and assigning value to rights relevant only to strangers to the transaction. Neither the patent statute nor the Court's precedents require this inefficient result.

While it is clear that the Court has not applied a mandatory exhaustion rule to conditional or unauthorized sales, it also is clear that the cases relied on by Petitioners and certain *amici* were decided against the backdrop of an economy that existed more than a century ago. Whatever the needs of contracting parties with respect to coffin lids, wardrobe beds or eyeglass lenses, patentees today, consistent with the patent statute, need to be able to clear blocking positions and provide certain parties patent rights to engage in limited activities while retaining other patent rights to assert at different levels of the product distribution chain. Particularly with no provision of the patent statute mandating otherwise – and Petitioners and their *amici* have cited no such language – the Court should decline the invitation to restrict the rights of

---

[15] Robert P. Merges & Richard R. Nelson, *On the Complex Economics of Patent Scope*, 90 Colum. L. Rev. 839, 874 (May 1990).

private contracts and substantially and unnecessarily burden already complex transactions.

CONCLUSION

For the foregoing reasons, the judgment of the court of appeals should be affirmed.

Respectfully submitted,

KENNETH RUBENSTEIN
ANTHONY C. COLES
PROSKAUER ROSE LLP
1585 Broadway
New York, NY 10036
(212) 969-3000

GARRARD R. BEENEY*
JAMES T. WILLIAMS
ANN MCLEAN JORDAN
STANLEY A. ROBERTS
SULLIVAN & CROMWELL LLP
125 Broad Street
New York, NY 10004
(212) 558-4000

Counsel for Amicus Curiae MPEG LA LLC

December 10, 2007

* Counsel of Record

No. 06-937

In The
Supreme Court of the United States

QUANTA COMPUTER, INC., *et a..*,

Petitioners,

v.

LG ELECTRONICS, INC.,

Respondent.

On Writ Of Certiorari To The United States Court Of Appeals For The Federal Circuit

BRIEF OF NCR CORPORATION AS AMICUS CURIAE IN SUPPORT OF PETITIONERS

MORGAN CHU
Counsel of Record
LAURA W. BRILL
ELLISEN S. TURNER
IRELL & MANELLA LLP
1800 Avenue of the Stars
Los Angeles, CA 90067
(310) 277-1010
Counsel for Amicus Curiae NCR Corporation

TABLE OF CONTENTS

Page

STATEMENT OF INTEREST OF AMICUS CURIAE 1

SUMMARY OF THE ARGUMENT 2

ARGUMENT 5

I. METHOD AND APPARATUS CLAIMS SHOULD BE TREATED THE SAME FOR EXHAUSTION PURPOSES BECAUSE PATENTEES OFTEN USE THEM INTERCHANGEABLY TO DESCRIBE A SINGLE INVENTION. 5

A. The Patent Statutes Permit A Patent Applicant To Claim An Invention As Either An Apparatus, Or A Method, Or Both 5

B. Standard Patent Practice Is To Define The Invention Using Virtually Interchangeable Method And Apparatus Claims. 7

C. Method And Apparatus Claims May Not Be Patentably Distinct And Should Not Be Treated Differently For Exhaustion Purposes 11

TABLE OF CONTENTS – Continued

Page

D. The Exhaustion Doctrine Is Necessary To Protect Purchasers From Both Method And Apparatus Claims Designed To Seek Royalties From Every Link In The Chain Of Commerce. 13

II. THE FEDERAL CIRCUIT'S BRIGHT LINE RULE PRECLUDING EXHAUSTION OF METHOD CLAIMS IS INCONSISTENT WITH THIS COURT'S PRECEDENT..... 16

A. The Test For Exhaustion Is Not The Form Of The Asserted Patent Claims, But Instead Whether The Article Sold Has A Substantial Use Other Than To Practice The Claimed Invention..... 16

B. The Federal Circuit's Decision Creates a Rigid Rule Precluding Exhaustion of Method Claims That Lacks Sound Reasoning And Should Be Overruled. 21

i The Federal Circuit Has Used The Wrong Test For Exhaustion. 21

TABLE OF CONTENTS – Continued

Page

ii. This Court Should Hold That There Is No Rigid Rule Precluding The Exhaustion of Method Claims And, In Appropriate Circumstances, Method Claims May Be Exhausted By The Sale Of A Device. 26

CONCLUSION 28

TABLE OF AUTHORITIES

Page(s)

Cases

Adams v. Burke,
84 U.S. (17 Wall.) 453 (1873) 14, 20

Bandag, Inc. v. Al Bolser's Tire Stores, Inc.,
750 F.2d 903 (Fed. Cir. 1984) ..... passim

Dawson Chemical Co. v. Rohm & Hass Co.,
448 U.S. 176 (1980) 20

Ethyl Gasoline Corp. v. United States,
309 U.S. 436 (1940) ..... passim

Glass Equipment Development, Inc. v. Besten, Inc.,
174 F.3d 1337 (Fed. Cir. 1999) ..... passim

Hewlett-Packard Co. v. Bausch & Lomb Inc.,
909 F.2d 1464 (Fed. Cir. 1990) 28

Hewlett-Packard Co. v. Repeat-O-Type Stencil Mfg. Corp. Inc.,
123 F.3d 1445 (Fed. Cir. 1997), *cert. denied*, 523 U.S. 1022 (1998) 27

In re Abele,
684 F.2d, 902 (C.C.P.A. 1982) 15

In re Johnson,
589 F.2d 1070 (C.C.P.A. 1978) 9

TABLE OF AUTHORITIES – Continued

Page(s)

In re Johnston,
502 F.2d 765, 183 USPQ 172
(C.C.P.A. 1974) 23

In re Nuijten,
500 F.3d 1346 (Fed. Cir. 2007) 7

In re Tarczy-Hornoch, 397 F.2d 856
(C.C.P.A. 1968) 12

Indep. Ink, Inc. v. Ill. Tool Works, Inc.,
396 F.3d 1342 (Fed. Cir. 2005),
vacated 547 U.S. 28 (2006) 25

Jazz Photo Corp. v. Int'l Trade Comm'n,
264 F.3d 1094 (Fed. Cir. 2001) 27

KSR Int'l. Co. v. Teleflex Inc., 127 S.Ct.
1727, 167 L.Ed.2d 705 (2007) 28

Leitch Manufacturing v. Barber Co.,
302 U.S. 458 (1938) 20

LG Elecs., Inc. v. Bizcom Elecs. Inc.,
453 F.3d 1364 (Fed. Cir. 2006) ..... passim

Lucent Tech. v. Gateway, Inc.,
470 F. Supp. 2d 1163 (S.D. Cal. 2007) 26

Met-Coil Systems Corp. v. Korners Unltd., Inc.,
803 F.2d 684 (Fed. Cir. 1986) 27

TABLE OF AUTHORITIES – Continued

Page(s)

Newell Cos., Inc. v. Kenney Mfg. Co.,
864 F.2d 757 (Fed. Cir. 1988) *cert. denied*, 493 U.S. 814 (1989) 27

State Street Bank & Trust Co. v. Signature Fin. Group,
149 F.3d 1368 (Fed. Cir. 1998) 6

United States ex rel. Steinmetz v. Allen,
192 U.S. 543 (1904) 7

United States v. Univis Lens Co.,
316 U.S. 241 (1942) ..... passim

United States v. Univis Lens Co.,
41 F. Supp. 258 (S.D.N.Y. 1941) 18, 19

Statutes

35 U.S.C. § 101 ..... 5, 6, 15

35 U.S.C. § 112 ..... 5, 6

35 U.S.C. § 121 11

35 U.S.C. § 271 6

35 U.S.C. § 284 7

Other Authorities

37 C.F.R. § 1.141 11

37 C.F.R. § 1.71 5

TABLE OF AUTHORITIES – Continued

Page(s)

37 C.F.R. § 1.75 5

United States Patent and Trademark Office ("PTO"), United States Department of Commerce, Manual of Patent Examining Procedure ("MPEP") (8th ed. Rev. 5, 2006) 5, 6, 11, 12

United States Patent and Trademark Office, United States Department of Commerce, Examination Guidelines, 61 Fed.Reg. 7478 (1996) 8, 9

Treatises

HARMON, PATENTS AND THE FEDERAL CIRCUIT, (8th ed. 2007) 8

ROBERT C. FABER, LANDIS ON MECHANICS OF PATENT CLAIM DRAFTING (5th ed. 2007) 8, 13, 14, 28

STATEMENT OF INTEREST OF AMICUS CURIAE[1]

Amicus NCR Corporation was founded in 1884 and since that time has evolved into a complete technology solutions supplier that provides software, hardware, and professional services that enable businesses to automate transactions and build customer relationships in the retail, financial, telecommunications, transportation, insurance, healthcare, and manufacturing industries as well as for governmental entities. NCR's products often incorporate numerous advanced technologies to create integrated solutions. As a result, NCR has operated for over 120 years as a patent holder, a licensor, and a licensee of patented technology.

In many instances, patents in the fields of technology relevant to NCR include both apparatus claims and method claims that describe the intended, and oftentimes only, practical use for components and devices commonly used in the industry. For such patents, the Federal Circuit's broad statement that method claims are not subject to exhaustion has the potential to damage NCR and other similarly situated businesses whose product sales may be jeopardized by patent holders who first authorize

---

[1] The parties have consented to the submission of briefs of *amicus curiae* in letters filed separately with the Clerk of the Court on October 31 and November 1 by counsel for Petitioners and Respondent, respectively. Counsel of record for all parties received notice at least 10 days prior to the due date of the *amicus curiae's* intention to file this brief. Pursuant to Rule 37.6, counsel for *amicus curiae* certify that no counsel for a party authored this brief in whole or in part, and no person or entity other than *amicus curiae*, or their counsel, has made a monetary contribution to this brief's preparation or submission.

those sales and then seek an unjustifiable second royalty against customers that use the purchased products. NCR therefore has a strong interest in requesting that this Court reverse the Federal Circuit and clarify that the sale of a device can, and in appropriate circumstances will, exhaust a patentee's rights in its method claims where the device has no substantial use other than to practice the claimed method.

SUMMARY OF THE ARGUMENT

Under this Court's precedent, the sale of a device can exhaust associated method claims, at least where the device has no substantial use other than to practice the claimed method. *United States v. Univis Lens Co.*, 316 U.S. 241 (1942); *Ethyl Gasoline Corp. v. United States*, 309 U.S. 436 (1940). Despite this precedent, the Federal Circuit has stated a new, rigid rule: "the sale of a device does not exhaust a patentee's rights in its method claims." *LG Elecs., Inc. v. Bizcom Elecs. Inc.*, 453 F.3d 1364, 1370 (Fed. Cir. 2006). The Federal Circuit's rule ignores the practical realities of the claim drafting process – method and apparatus claims are often used interchangeably to describe the same invention.

As the *Univis Lens* decision reflects, an inventor may create a novel component that has no inherent use other than to be combined with other elements to create a finished system. During the patent application process the applicant may therefore add claims that merely combine the new component with generic elements to create a useable "system." An example would be combining a novel processor with a memory, system bus, and other standard components and drafting a claim to cover an entire personal

computer system. Similarly, although an applicant may use apparatus claims to describe a novel product, the applicant may also add method claims that merely recite the product's plainly intended use. Moreover, in many arts, apparatus and method claims are interchangeable such that patentees can, and often do, use both types of claims to cover the same inventive concept. While such claim drafting strategies are not necessarily improper, exhaustion of the patent monopoly through the authorized sale of the invention's core component should not turn on a mere drafting choice by the patent applicant to claim the invention as an apparatus, or a process, or both.

This Court's precedents reflect a basic principle underlying the exhaustion doctrine – once sold, the value of a patented article is in its use:

> An incident to the purchase of any article, whether patented or unpatented, is the right to use and sell it, and upon familiar principles the authorized sale of an article which is capable of use only in practicing the patent is a relinquishment of the patent monopoly with respect to the article sold.

Univis Lens, 316 U.S. at 249. Thus, under the exhaustion doctrine, the authorized first sale of an article eliminates any patent monopoly the seller may have over the article sold and its only reasonable use. The Federal Circuit's decision below acknowledges this point. *LG Elecs.*, 453 F.3d at 1370 (Fed. Cir. 2006) ("An unconditional sale of a patented device exhausts the patentee's right to control the purchaser's *use* of the device thereafter.") (quotations and alterations removed and emphasis added). But

the Federal Circuit nevertheless erodes this principle by eschewing the *Univis Lens* analysis in favor of a bright line rule that the allegedly exhausted claims must read directly on the article sold and hence the sale of a device can never exhaust method claims that define the device's only reasonable use. *LG Elecs.*, 453 F.3d at 1370 (citing *Bandag, Inc. v. Al Bolser's Tire Stores, Inc.*, 750 F.2d 903, 924 (Fed. Cir. 1984) (finding first sale doctrine inapplicable where the asserted claims did not "read on" the article sold); *Glass Equipment Development, Inc. v. Besten, Inc.*, 174 F.3d 1337, 1342 n.1 (Fed. Cir. 1999) (same)).

Patent exhaustion is a rule of substance not form – an authorized sale of even one non-staple element of a patented apparatus may exhaust the patent if the element has no substantial use other than to practice the patent claims. *Univis Lens*, 316 U.S. at 249. Similarly, the authorized sale of a device should, in appropriate circumstances, exhaust method claims as well as apparatus claims, at least where the device has no substantial use other than to practice the claimed method. The Federal Circuit's contrary ruling creates a formalistic distinction between claim types where there is no practical difference in the invention clamed – a result that, if left unchecked, would effectively eliminate the exhaustion doctrine, reducing it to a mere detour in the claim drafting process.

ARGUMENT

I. METHOD AND APPARATUS CLAIMS SHOULD BE TREATED THE SAME FOR EXHAUSTION PURPOSES BECAUSE PATENTEES OFTEN USE THEM INTERCHANGEABLY TO DESCRIBE A SINGLE INVENTION.

A. The Patent Statutes Permit A Patent Applicant To Claim An Invention As Either An Apparatus, Or A Method, Or Both.

Each issued patent includes a specification that must conclude with "one or more claims particularly pointing out and distinctly claiming the subject matter which the applicant regards as his invention." 35 U.S.C. § 112; *see also* 37 C.F.R. §§ 1.71(a), (b), 1.75(a). The patent statutes describe four classes of inventions that an applicant may claim: processes, machines, manufactures, and compositions of matter. 35 U.S.C. § 101 ("Whoever invents or discovers any new and useful process, machine, manufacture, or composition of matter, or any new and useful improvement thereof, may obtain a patent therefor, subject to the conditions and requirements of this title.").

These four classes correspond to the two primary claim types. Claims covering processes are typically called "method" or "process" claims, while claims covering machines, manufactures, and compositions are typically called "apparatus" or "product" claims. United States Patent and Trademark Office ("PTO"), United States Department of Commerce, Manual of Patent Examining Procedure ("MPEP") § 2106 Part

II.C (8th ed. Rev. 5, 2006). "For processes, the claim limitations will define steps or acts to be performed. For products, the claim limitations will define discrete physical structures or materials." MPEP § 2106 Part II.C.

In addition to the claims, the specification must contain "a written description of the invention, and of the manner and process of making *and using it*." 35 U.S.C. § 112 ¶ 1 (emphasis added). This is known as the "utility requirement" and it arises from the basic law of statutory subject matter, which states that a patent may issue only for "new *and useful*" inventions and as a result an applicant is not entitled to a patent unless and until it shows a useful and practical application for the invention. 35 U.S.C. § 101 (emphasis added). For this reason, even patents claiming a novel apparatus are required to describe a practical use for the apparatus – a use that most any competent draftsperson may also claim as a method.

This Court's holding that exhaustion may occur when the article sold has no substantial non-infringing use is consistent with the patent statutes, which recognize that the value of an invention is in its use. Inventions are not patentable unless they produce a "useful, concrete and tangible result." *State Street Bank & Trust Co. v. Signature Fin. Group*, 149 F.3d 1368, 1373-74 (Fed. Cir. 1998). Moreover, a purchaser doesn't infringe a patent by merely possessing a patented article without using it. Instead, the patent statutes state that "whoever without authority makes, *uses*, offers to sell, or sells any patented invention ... infringes the patent." 35 U.S.C. § 271(a) (emphasis added). Indeed, the touchstone for a patentee's damages for infringement

is "a reasonable royalty for the *use* made of the invention by the infringer." 35 U.S.C. § 284 (emphasis added).

Again, in some instances a claimed method may describe nothing more than the only practical and intended use of a novel apparatus. In such instances, the method claim merely makes explicit in the patent's specification that which the law already provides -- a right to control the invention's use. Consistent with this Court's precedent and patent policy, that right may be exhausted by the first sale of a device where the device's only reasonable use is to practice the invention. A patentee should not be able to avoid that result through the strategic drafting choices made during the patent application process.

B. Standard Patent Practice Is To Define The Invention Using Virtually Interchangeable Method And Apparatus Claims.

In many arts, apparatus and method claims are virtually interchangeable and a patentee may use either claim type to describe the same invention. Over a century ago, this Court recognized the principle that an apparatus and the method for its use "may approach each other so nearly that it will be difficult to distinguish the process from the function of the apparatus" and the Court therefore invalidated a prior PTO rule prohibiting method and apparatus claims from appearing in the same patent. *United States ex rel. Steinmetz v. Allen*, 192 U.S. 543, 559 (1904); *see also In re Nuijten*, 500 F.3d 1346, 1362 (Fed. Cir. 2007) (Lin, J. concurring-in-part and dissenting-in-part) (noting that "claims to essentially

the same invention can frequently be drafted, with at most subtle differences in scope, to either processes or manufactures.").

As a result, standard patent practice is that a "method should, where possible, also be claimed in a product claim." ROBERT C. FABER, LANDIS ON MECHANICS OF PATENT CLAIM DRAFTING § 4:10, 4-34. (5th ed. 2007). *See also* FABER, § 7:2, 7-5 ("For the fullest protection wherever an invention is capable of being claimed in more than one of the different ways, it is recommended that be done."). As a leading treatise on patent claim drafting explains, "[a]n invention to a product ... may be claimed in any of several ways, depending on the individual product." *Id.* § 7:2, 7-4. For example, it may be claimed as "a product" or "a process for using the product." *Id.* Similarly, a process may be claimed as "a process" or "a machine which performs or uses the process." *Id.* § 7:2, 7-5. *See also* HARMON, PATENTS AND THE FEDERAL CIRCUIT, § 6.7(d) (8th ed. 2007) ("The claims defining some inventions can by competent draftsmanship be directed to either a method or an apparatus.").

The PTO's Final Computer Related Examination Guidelines provide an example of this commonplace practice. The Guidelines explain that an applicant may claim a process for (a) analyzing a chemical compound to determine its structure and then (b) displaying the compound's structure. PTO, United States Department of Commerce, Examination Guidelines, 61 Fed.Reg. 7478 , 7483 (1996). But the applicant may also claim the same invention using an apparatus claim that defines a computer system with means for (a) analyzing a chemical compound to

determine is structure and then (b) displaying its structure." *Id.* Depending on the application's written description, "the patentability of this apparatus claim will stand or fall with that of the process claim." *Id.*

Reviewing claim elements side by side demonstrates the simplicity with which a drafter may create a method claim that does nothing more than state the only practical use for a claimed apparatus:

1. A computer ***system*** for determining and displaying the structure of a chemical compound comprising:	2. A ***process*** for determining and displaying the structure of a chemical compound comprising:
(a) processing means for solving a wavefunction that determines the compound's structure; and	(a) solving a wavefunction to determine the compound's structure; and
(b) display means for creating and displaying an image representing the compound's structure.	(b) displaying the structure of the compound determined in step (a).

As these examples reflect, "the form of the claim is often an exercise in drafting." *In re Johnson*, 589 F.2d 1070, 1077 (C.C.P.A. 1978). Where, as in these examples, a patent uses a method claim to cover an article's only practical use, "upon familiar principles the authorized sale of [the] article which is capable of use only in practicing the patent is a relinquishment

of the patent monopoly" and hence should exhaust the otherwise applicable method claim. *Univis Lens*, 316 U.S. at 249.

This is hardly a hypothetical exercise. The Respondent, LGE, has patents at issue that similarly contain method claims that may describe the only practical use of a claimed apparatus. For example, Claim 1 of U.S. Patent No. 5,379,379 describes an apparatus – a "memory control unit" for controlling a main memory in a processing system, including means for reading and writing main memory over a system bus in a specified manner. Claim 7 of the same patent describes the associated method – steps for using the memory control unit to control main memory in a processing system, including steps for reading and writing main memory over the system bus. Similarly, Claim 1 of LGE's U.S. Patent No. 5,077,733 describes an "*[a]pparatus for* determining priority of access to a bus among a set of devices coupled to the bus," while Claim 15 provides the analogous "*method for* determining priority of access to a bus among a set of devices coupled to the bus." Another striking example of a method claim that merely recites the required function of a claimed apparatus occurs in Claims 1 and 12 of U.S. Patent No. 4,918,645, an LGE patent originally at issue in this case. These claims are substantially identical except that Clam 1 describes a "memory control apparatus" whereas Claim 12 describes a "method for controlling a memory." Claims such as these, which cover the same invention should be treated the same for exhaustion purposes.

C. Method And Apparatus Claims May Not Be Patentably Distinct And Should Not Be Treated Differently For Exhaustion Purposes.

As explained in detail below, a single patent may contain both method and apparatus claims provided that the claims relate to a single, distinct invention. Treating method and apparatus claims equally for exhaustion purposes is thus particularly appropriate where both claims appear in the same patent and hence presumptively relate to the same invention.

Where a patent application contains multiple claims that describe separate inventions, the PTO may issue a restriction requirement. 35 U.S.C. § 121 ("If two or more independent and distinct inventions are claimed in one application, the Director may require the application to be restricted to one of the inventions."); *see also* 37 C.F.R. § 1.141 ("Two or more independent and distinct inventions may not be claimed in one national application ..."). A restriction requires the applicant to pursue each distinct invention in a separate patent application.

To determine whether claims define distinct inventions, the analysis is one of substance, not form – "it is the claimed *subject matter* that is considered and such claimed subject matter must be compared in order to determine the question of distinctness or independence." MPEP § 806.01 (emphasis added). "Related inventions are distinct if the inventions as claimed are not connected in at least one of design, operation, or effect ... and wherein at least one invention is patentable (novel and nonobvious) over the other." MPEP § 802.01 (emphasis removed). In contrast, claims are not directed to distinct

inventions, and a restriction is never required, where the claims define the same essential characteristics of an invention's single disclosed embodiment. MPEP § 806.03.

As a result, a claimed apparatus with no substantial use other than to practice a claimed method is not a distinct invention and the two claims may appear within the same patent. *Cf. In re Tarczy-Hornoch*, 397 F.2d 856, 857 (C.C.P.A. 1968) (overruling prior decisions that patent applicants could not claim both a machine and its inherent function). For example, according to the PTO's procedures, an apparatus and the process of using the apparatus might be distinct if either "(A) the process of using as claimed can be practiced with another materially different product; or (B) the product as claimed can be used in a materially different process." MPEP § 806.05(h). Similarly, a process and an apparatus for practicing the process might be distinct "if either or both of the following can be shown: (A) that the process *as claimed* can be practiced by another materially different apparatus or by hand; or (B) that the apparatus *as claimed* can be used to practice another materially different process." MPEP § 806.05(e) (emphasis in original).

Thus, where both method and apparatus claims appear in the same patent, they ordinarily relate to a single invention and are not patentably distinct. As such, there is no basis to treat the claims differently for purposes of the exhaustion doctrine, under which "[t]he patentee may surrender his monopoly in whole by the sale of his patent or in part by the sale of an article embodying *the invention*." *Univis Lens*, 316 U.S. at 250 (emphasis added). Both types of claims

may be exhausted where a device lacks any substantial use other than to practice the claimed invention.

D. The Exhaustion Doctrine Is Necessary To Protect Purchasers From Both Method And Apparatus Claims Designed To Seek Royalties From Every Link In The Chain Of Commerce.

Excluding method claims from exhaustion will allow patent holders to improperly obtain multiple bites from a single apple. Just as a novel component is often claimed in combination with generic elements to form a claimed system, any patent on a novel apparatus can (and in most cases will) also claim a method of using the apparatus. Indeed, it is standard and recommended practice in the patent field to draft claims that enable the patent holder to pursue any one of the multiple parties along the chain of commerce depending on where the patent holder may achieve the greatest royalty – either a manufacturer that makes and sells the components at the heart of the invention, a vendor that integrates the component into a larger system using generic add-ons, or a customer that uses the invention for its intended purpose. *See* FABER, § 7:2, 7-3 ("Each of the classes of invention should be the subject of a separate claim, to the extent that the invention encompasses several classes of claims. An application may have any or all of each of the different classes of claims.") (footnote omitted). As a leading treatise on patent claim drafting explains:

> Damages for patent infringement are awarded based on the claimed invention.

> The larger the claimed invention, that is, the more elements it contains, the greater may be the base upon which damages are calculated. Hence, one claims an entire machine or installation or article or process, not just a component part. ...
>
> Claim writers pursue claims to large combinations, and particularly narrower claims to large combinations, because royalties or damages might be based on the value of the large combination including the invention instead of "the Invention."

FABER, § 8:4, 8-4 – 8-6 (footnotes omitted).

Although competent claim drafting will thus permit patentees to pursue infringement claims against *anyone* in the chain of commerce, the exhaustion doctrine prevents them from pursing the same claims against *everyone* in the chain based on their use of the same product for which the patentee has already received a reward. *Adams v. Burke*, 84 U.S. (17 Wall.) 453, 456 (1873) (holding that "in the essential nature of things, when the patentee, or the person having his rights, sells a machine or instrument whose sole value is in its use, he receives the consideration for its use and he parts with the right to restrict that use."). Thus, whether the patentee ultimately asserts a combination claim against Buyer A, who purchases a novel component and combines it with generic elements to create a system for sale, or instead asserts a method claim against Buyer B, who purchases a product and uses it

for its intended purpose, the buyer's dilemma is the same: the product purchased may have no substantial use other than to infringe the asserted claims. For exhaustion purposes, there is no inherent difference between the two classes of claims and no rational basis to protect Buyer A from the patent monopoly, but not Buyer B.

This Court's precedent sensibly reflects that the exhaustion doctrine protects both buyers equally. Just as a component may have no substantial use other than to be combined with additional elements to create a patented apparatus, an apparatus may have no substantial use other than to practice a patented method. The exhaustion doctrine protects against an unwarranted extension of the patent monopoly and, just as when considering an applicant's entitlement to the patent monopoly in the first instance, "sematogenic considerations preclude a determination based solely on the words appearing in the claims. In the final analysis ... the claimed invention, as a whole, must be evaluated for what it is." *In re Abele*, 684 F.2d, 902, 907 (C.C.P.A. 1982).

Similarly, the restriction requirement for patentably distinct inventions arises from the patent statutes, which limit an applicant to "a" patent, *i.e.*, a single patent, covering the invention. 35 U.S.C. § 101. Where method and apparatus claims are not distinct, and the apparatus cannot reasonably be used without practicing the method, the Federal Circuit's rule that sale of the apparatus will not exhaust the method claims improperly awards the inventor the benefit of a second, distinct patent on the same invention and thus provides the inventor an opportunity for a second royalty on a single product.

II. THE FEDERAL CIRCUIT'S BRIGHT LINE RULE PRECLUDING EXHAUSTION OF METHOD CLAIMS IS INCONSISTENT WITH THIS COURT'S PRECEDENT.

A. The Test For Exhaustion Is Not The Form Of The Asserted Patent Claims, But Instead Whether The Article Sold Has A Substantial Use Other Than To Practice The Claimed Invention.

This Court's decisions applying the exhaustion doctrine reflect that an authorized first-sale may exhaust any type of patent claim. The test is one of substance – whether the article has a substantial non-infringing use – not one of form based on the type of claim that the patentee elected to employ during the application process.

At least two of this Court's decisions, *Ethyl Gasoline* and *Univis Lens*, reflect that the sale of an article may exhaust both apparatus claims and method claims that cover the article's use. In *Ethyl Gasoline*, the patentee held several patents with product claims that covered a lead additive for use in a motor fuel and an improved motor fuel created using the additive. The patentee also held a pure method patent on a method of using the improved fuel by burning it in a combustion engine. *Ethyl Gasoline Corp. v. United States*, 309 U.S. 436, 446 (1940). The patentee manufactured and sold the additive to oil refiners who produced the improved motor fuel and sold it to distributors (called "jobbers") who in turn sold the fuel to retailers and consumers. *Id.* at 446-47. Through various license arrangements, the patentee imposed numerous downstream use and

resale restrictions on the refiners, distributors, and retailers. *Id.* at 447-50. The Government argued that the downstream restrictions violated the Sherman Act and sought to enjoin the patentee from enforcing downstream use and resale restrictions on those who purchased leaded fuel from the authorized refineries.

The patentee sought to justify its downstream restrictions on the ground that the products remained within the patent monopoly by virtue of its patents on the additive, the improved fuel, and the methods of using the improved fuel. *Id.* at 451, 456. If the patentee's theory were correct, the restrictions on the distributors and retailers were justified because these entities otherwise faced potential contributory infringement liability under the method claims and direct liability under the product claims. But this Court rejected that defense and found that the patents, including the patents with only method claims, were exhausted by the patentee's sale of the additive to the refiners and by the oil refiners' authorized sale of the improved fuel to the distributors. *Id.* at 457. As a result, any downstream restrictions on the fuel were outside the patent monopoly.

The patents were thus exhausted although the method claims did not cover the fuel itself and did not cover the fuel as it passed from the refiner to the distributor, or the distributor to the retailer, or the distributor to the end customer but instead covered the end customer's use of the fuel in an automobile. Inherent in this Court's decision was a finding that the leaded fuel had no substantial use but to perform the claimed methods such that the first sale of the

leaded fuel exhausted the patentee's claims to the fuel's only reasonable use.

The facts in *Univis Lens* were strikingly similar and this Court accordingly reached the same result. In *Univis Lens*, the articles sold were lens blanks, which are ground and polished to create finished eyeglass lenses. In addition to its patents covering lens blanks, Univis held patents that claimed both finished lenses and methods for using the blanks to create the lenses. *United States v. Univis Lens Co.*, 41 F. Supp. 258, 262-63 (S.D.N.Y. 1941). Wholesalers and finishing retailers purchased lens blanks from Univis and ground the blanks into finished lenses. In turn, finishing retailers, and prescription retailers who purchased lenses from the wholesalers, mounted the finished lenses in eyeglasses that they sold to customers. The wholesalers, finishing retailers, and prescription retailers each had licenses with Univis that required them to charge minimum resale prices. *Univis Lens*, 316 U.S. at 244-45. The Government argued that the price-fixing violated the Sherman Act.

Univis countered that it had the right to control the price at which its patented goods were first sold, and the first sale of patented goods did not occur until the lenses were finished. This Court rejected Univis's theory that its patent rights permitted the downstream resale restrictions. The Court found that the first sale of the lens blanks exhausted the Univis patents because each lens blank sold had no substantial use other than to be incorporated into a finished lens in accordance with Univis's patent claims. *Id.* at 249. The Court explained its holding in terms that are equally applicable to both

apparatus and method claims, particularly given that the two claim types are interchangeable in many arts:

> The patentee may surrender his monopoly in whole by the sale of his patent or in part by the sale of an article embodying the invention. His monopoly remains so long as he retains the ownership of the patented article. But sale of it exhausts the monopoly in that article and the patentee may not thereafter, by virtue of his patent, control the use or disposition of the article.
>
> ...
>
> [W]here one has sold an uncompleted article which, because it embodies essential features of his patented invention, is within the protection of his patent, and has destined the article to be finished by the purchaser in conformity to the patent, he has sold his invention so far as it is or may be embodied in that particular article.

Id. at 250-51. Notably, among Univis' patents that it argued justified its downstream restrictions on the lens wholesalers, finishers, and retailers was a pure method patent that covered a process for creating finished lenses from lens blanks. *See United States v. Univis Lens Co.*, 41 F. Supp. 258, 262-63 (S.D.N.Y. 1941) (explaining that asserted U.S. Patent No.

1,879,769 covers "only a method for producing a lens to eliminate prismatic imbalance").

Additional decisions from this Court, although not couched in the language of "exhaustion" or "first sale," accord with the principles of *Univis Lens* and *Ethyl Gasoline* that the sale of a product may exhaust a patent holder's right to assert its method claims against the purchaser. For example, in *Dawson Chemical Co. v. Rohm & Hass Co.*, 448 U.S. 176 (1980), where the patentee held a patent covering a method of applying a chemical called propanil as a herbicide, this Court accepted the parties' concession that the propanil had no substantial use other than to practice the claimed method, and that the patentee "relinquishes its monopoly [in the patented method] by selling the propanil" and as a result its buyers could use the propanil without fear of being sued for infringement. *Id.* at 182, 186 (citing *Univis Lens* and *Adams v. Burke*, 84 U.S. (17 Wall). 453 (1873)). Similarly, in *Leitch Manufacturing v. Barber Co.*, 302 U.S. 458 (1938), the patent holder sold bituminous emulsion to road builders who used it in accordance with the patented method to apply a film on the surface of roadways that prevented evaporation during curing, which enhanced the concrete's strength. This Court stated that "any road builder can buy emulsion from [the patent holder] for that purpose, and whenever such a sale is made, the law implies authority to practice the invention." *Id.* at 461. The Federal Circuit's new rule that the sale of a device cannot exhaust method claims does not comport with the analysis in this Court's prior decisions.

B. The Federal Circuit's Decision Creates a Rigid Rule Precluding Exhaustion of Method Claims That Lacks Sound Reasoning And Should Be Overruled.

i. The Federal Circuit Has Used The Wrong Test For Exhaustion.

Although the Federal Circuit's decision in this case states a rigid rule that the sale of a device cannot exhaust method claims, the court did not provide any explanation to support this view. Instead, the Federal Circuit merely cited to its prior decisions in *Bandag* and *Glass Equipment*. *LG Elecs.*, 453 F.3d at 1370. In both of those decisions, however, the Federal Circuit eschewed the substantial non-infringing use analysis that this Court applied in *Univis Lens*. In its place, the court undertook a narrower and more rigid analysis into whether the asserted claims actually "read on" the article sold – an analysis that even the lens blanks in *Univis Lens* would have failed because they did not contain all of the elements of Univis's patents on finished lenses and methods for making finished lenses. The Federal Circuit thus created a new, infringement test for exhaustion: a patent was not exhausted unless the patent would have directly "read on" the article sold. *See Bandag*, 750 F.2d at 924 ("The doctrine that the first sale by a patentee of an article embodying his invention exhausts his patent rights in that article, is inapplicable here, because the claims of the Carver patent are directed to a 'method of retreading' and *cannot read on* the

equipment Bolser used in its cold process recapping.") (emphasis added).

Under the Federal Circuit's test, the sale of a device can never exhaust a method claim because a method claim cannot "read on" a device standing alone (at least not until the device is used to perform the claimed method). Neither of the Federal Circuit's prior decisions provided any reason for applying this new infringement test for exhaustion. In both prior decisions, however, the court did find, as part of a separate implied license analysis, that the accused infringer had not provided sufficient evidence that the products at issue lacked any substantial uses other than to practice the patented methods.

In *Bandag*, the patentee's method claims covered a process for retreading tires. The court noted that the patent's claims "consist exclusively of recitations of method steps." *Bandag*, 750 F.2d at 922. Bandag authorized its franchisees to purchase rubber, materials, and equipment for tire retreading from Bandag and to perform the patented retreading method. *Id.* at 906. Bolser purchased from one of Bandag's franchisees certain tire retreading equipment that Bandag had manufactured and Bolser used that equipment to perform the tire retreading method. *Id.* Bandag sued Bolser for patent infringement alleging that Bolser was using the equipment it purchased to practice the patented retreading method. *Id.*

The Federal Circuit first recognized that although apparatus and method claims are distinct, some inventions can be defined by either type of claim:

> It is commonplace that the claims defining some inventions can by

> competent draftsmanship be directed to either a method or an apparatus. *See In re Johnston*, 502 F.2d 765, 772, 183 USPQ 172, 179 (CCPA 1974) (Rich, J., dissenting). The inventor of such an invention has the option as to the form the claims in his patent will assume. There is nothing improper in this state of affairs, however, and the exercise of that option is to be respected in interpreting such claims as do ultimately issue from prosecution.

Id. at 922. The Federal Circuit nevertheless ruled that first sale doctrine was inapplicable because "the [asserted] patent is not a patent on equipment for performing the method disclosed, even if its claims could have been so drafted." *Id.* The Court ruled that the claims of the asserted patent were directed to a method and hence "cannot read on the equipment [the purchaser] used" to perform the claimed method. *Id.* at 924.

Although the Federal Circuit cited this Court's decision in *Univis Lens* as authority for the doctrine of patent exhaustion, the court improperly determined that the doctrine is applicable only where the asserted claims read directly on the article sold. *Id.* But as reflected in Part II.A above, the *Univis Lens* decision reflects that whether the claims read on the article sold has never been the exclusive test for exhaustion. Instead, the court must consider whether there is any substantial use for the article other than to practice the asserted claims. Moreover, as the discussion in Part I above makes clear, allowing a patentee to avoid exhaustion by employing

the mere drafting choice to describe the invention using both method and apparatus claims exalts form over substance. The Federal Circuit's holding merely encourages multiplicity in patent claims and would eviscerate the exhaustion doctrine in any art where a competent draftsperson could describe the invention using either claim type.

In *Glass Equipment*, the patentee, Glass Equipment Development, Inc. (GED) held an apparatus patent that claimed "spacer frames" used to make thermally insulating glass windows. 174 F.3d at 1339-40. One element of the claimed spacer frame was a "corner key," which connected the spacer frame segments. *Id.* GED also held a separate method patent for making spacer frames with a "linear extruding machine" that assembled spacer frames using, in part, corner keys. *Id.*

GED licensed Allmetal, Inc. to manufacture spacer frame components, including corner keys. *Id.* at 1339. Simonton, a window manufacturer, bought corner keys from Allmetal and linear extruding machines from the accused infringer, Besten, and used them to make spacer frames. *Id.* at 1340. GED sued Simonton for directly infringing the method claims and sued Besten for contributorily infringing. *Id.* Simonton settled, admitting infringement of the method patent. *Id.* Besten asserted that Simonton had an implied license to practice the method claims due to its purchase of corner keys from Allmetal – an authorized seller. *Id.* In a footnote, the Federal Circuit determined, that the first sale doctrine was inapplicable to these facts:

> Here, where the articles sold were corner keys, which are not themselves

> patented (they are merely embodiments of an unpatented element of the '195 patent claims), and the license issue concerns GED's right to exclude concerning the *method* patent, not the *apparatus* patent, the first sale doctrine is inapplicable to the analysis of the facts. *See Bandag, Inc. v. Al Bolser's Tire Stores, Inc.*, 750 F.2d 903, 924, 223 USPQ 982, 997 (Fed.Cir.1984) (holding first sale doctrine inapplicable where equipment was sold and license/infringement issue concerned patent claiming method of using equipment).

Id. at 1341 n.1. Thus, rather than apply this Court's analysis in *Univis Lens* to determine whether the articles sold had any substantial use other than to practice the claimed invention, the court focused on the fact that the articles were "not themselves patented" under the asserted claims. The Federal Circuit simply repeated the error in its analysis in the *Bandag* decision by not following the precedent set by this Court in *Univis Lens*. *Cf. Indep. Ink, Inc. v. Ill. Tool Works, Inc.*, 396 F.3d 1342, 1351 (Fed. Cir. 2005), *vacated* 547 U.S. 28 (2006) ("It is the duty of a court of appeals to follow the precedents of the Supreme Court until the Court itself chooses to expressly overrule them.").

ii. This Court Should Hold That There Is No Rigid Rule Precluding The Exhaustion of Method Claims And, In Appropriate Circumstances, Method Claims May Be Exhausted By The Sale Of A Device.

In both *Bandag* and *Glass Equipment*, the Federal Circuit failed to undertake the proper analysis under the exhaustion doctrine. But the Federal Circuit's incorrect analysis in those cases had little practical consequence because both decisions found, as part of an implied license analysis, that the facts were insufficient to establish that the articles sold lacked a substantial use other than to practice the claimed method. *Bandag*, 750 F.2d at 924-25; *Glass Equipment*, 174 F.3d at 1342-43.

Unfortunately, the Federal Circuit's error in failing to perform the proper analysis of the method claims at issue in these early decisions has now percolated into a broad statement that the exhaustion of method claims can never follow from the authorized sale of a device. As a result, some courts have further understood the rule to be that method claims can never be exhausted. *See, e.g., Lucent Tech. v. Gateway, Inc.*, 470 F. Supp. 2d 1163, 1169 n. 2 (S.D. Cal. 2007) (citing *LG Electronics* for the premise that "[t]he first sale doctrine is inapplicable where an accused device infringes methods claims.").

This rule is inconsistent with this Court's analysis in *Univis Lens* and *Ethyl Gasoline* and is inconsistent with the reasoning in several decisions issued by

prior Federal Circuit panels. *See, e.g., Jazz Photo Corp. v. Int'l Trade Comm'n*, 264 F.3d 1094, 1108 (Fed. Cir. 2001) ("The defense of repair is applicable to process claims, as well as to apparatus claims, when the patented process was used in the United States and the patent right has been exhausted for the articles produced thereby."); *Hewlett-Packard Co. v. Repeat-O-Type Stencil Mfg. Corp. Inc.*, 123 F.3d 1445, 1455 (Fed. Cir. 1997) ("When a patentee sells a device without condition, it parts with the right to enforce any patent that the parties might reasonably have contemplated would interfere with the use of the purchased device."), *cert. denied*, 523 U.S. 1022 (1998); *Met-Coil Systems Corp. v. Korners Unltd., Inc.*, 803 F.2d 684, 687 (Fed. Cir. 1986) ("A patent owner's unrestricted sales of a machine useful only in performing the claimed process and producing the claimed product 'plainly indicate that the grant of a license should be inferred.'"); *cf. Newell Cos., Inc. v. Kenney Mfg. Co.*, 864 F.2d 757, 765 (Fed. Cir. 1988) ("This court has adopted the rule that prior decisions of a panel of the court are binding precedent on subsequent panels unless and until overturned in banc."), *cert. denied*, 493 U.S. 814 (1989).

Unlike in *Bandag* and *Glass Equipment*, the practical consequences of the Federal Circuit's improper application of the exhaustion doctrine are now very real. If, as the district court found, there are no substantial uses for the articles sold other than to practice LGE's patents, then downstream customers will be left with products, bought and paid for, that they cannot use for any reasonable purpose. Moreover, the Federal Circuit's rigid rule will have eviscerated the exhaustion doctrine – patentees will simply draft method claims to avoid it. This Court

should clarify that the sale of a device can indeed exhaust method claims, in appropriate circumstances, where the device sold has no substantial use other than to practice the claimed method.

CONCLUSION

Both this Court's precedent and the practical realities of the patent application process dictate that, for exhaustion purposes, there is no difference between method and apparatus claims. Clearly, "[a]n apparatus claim covers what a device is, while a method claim covers what a device does." FABER § 7:2, 7-4 (citing *Hewlett-Packard Co. v. Bausch & Lomb Inc.*, 909 F.2d 1464 (Fed. Cir. 1990)). But patent law and policy reflect that, once sold, the value of the device is in its use. Under the law as found by this Court, a first sale exhausts the patent monopoly and prohibits the patent holder from controlling downstream uses of the device sold. This law is no less applicable where a device has no reasonable use other than to practice a claimed method than it is when the device has no reasonable use other than to be combined with additional elements to create a claimed system.

To the extent that the Federal Circuit's decision creates an *ipse dixit* rule that "the sale of a device does not exhaust a patentee's rights in its method claims" it should be overruled. As this Court has previously recognized "[r]igid preventative rules that deny fact finders recourse to common sense ... are neither necessary under our case law nor consistent with it." *KSR Int'l. Co. v. Teleflex Inc.*, 127 S.Ct. 1727, 1742-43, 167 L.Ed.2d 705 (2007).

Respectfully submitted,

Morgan Chu
Counsel of Record
Laura W. Brill
Ellisen S. Turner
Irell & Manella LLP
1800 Avenue of the Stars
Los Angeles, CA 90067
(310) 277-1010
Counsel for Amicus Curiae
NCR Corporation

(42)

No. 06-937

11-13-07

IN THE

Supreme Court of the United States

QUANTA COMPUTER, INC., QUANTA COMPUTER USA, INC., Q-LITY COMPUTER, INC.,
Petitioners,

v.

LG ELECTRONICS, INC.,
Respondent.

On Writ of Certiorari to the United States Court of Appeals for the Federal Circuit

BRIEF FOR *AMICI CURIAE* NOKIA CORPORATION AND NOKIA INC. IN SUPPORT OF PETITIONERS

RONALD A. ANTUSH
MATTHEW P. HARPER
TODD D. LEITSTEIN
DAVID L. COHEN
EVERETT UPSHAW
NOKIA INC.
6000 Connection Drive
Irving, TX 75039
(972) 894-5000

KATHLEEN M. SULLIVAN
Counsel of Record
BRIAN C. CANNON
QUINN EMANUEL URQUHART OLIVER & HEDGES, LLP
555 Twin Dolphin Drive, Suite 560
Redwood Shores, CA 94065
(650) 801-5000

Counsel for Amici Curiae

November 13, 2007

WILSON-EPES PRINTING CO., INC. – (202) 789-0096 – WASHINGTON, D. C. 20002

TABLE OF CONTENTS—Continued

Page

A. Supply Chains For Technology Products Provide Opportunities For Royalties To Be Gathered At Different Points Along the Chain 14

B. The Patent Exhaustion Doctrine Should Leave Technology Companies Adequate Breathing Room To Contract 17

III. IN THIS CASE, THE FEDERAL CIRCUIT IMPROPERLY ALLOWED MULTIPLE ROYALTIES FOR THE SAME PATENTED INVENTION 21

CONCLUSION 24

TABLE OF AUTHORITIES

CASES	Page
Aro Manufacturing Co. v. Convertible Top Replacement Co., 365 U.S. 336 (1961)	12
Aro Manufacturing Co. v. Convertible Top Replacement Co., 377 U.S. 476 (1964)	12, 13
Bonito Boats, Inc. v. Thunder Craft Boats, Inc., 489 U.S. 141 (1989)	5, 6
Bobbs-Merrill Co. v. Straus, 210 U.S. 339 (1908)	23
eBay Inc. v. MercExchange, L.L.C., 126 S. Ct. 1837 (2006)	17
Deprenyl Animal Health, Inc. v. University of Toronto Innovations Foundation, 297 F.3d 1343 (Fed. Cir. 2002)	18
Eldred v. Ashcroft, 537 U.S. 186 (2003)	5
Eli Lilly and Co. v. Medtronic, Inc., 496 U.S. 661 (1990)	5
General Talking Pictures Corp. v. Western Electric Co., 305 U.S. 124 (1938)	4, 10
Illinois Tool Works, Inc. v. Independent Ink, Inc., 547 U.S. 28 (2006)	11
LG Electronics, Inc. v. Bizcom Electronics, Inc., 453 F.3d 1364 (Fed. Cir. 2006)	21, 22
Mazer v. Stein, 347 U.S. 201 (1954)	5
Merck KGaA v. Integra Lifesciences I, Ltd., 545 U.S. 193 (2005)	5
Metro-Goldwyn-Mayer Studios Inc. v. Grokster, Ltd., 545 U.S. 913 (2005)	6
Motion Picture Patents Co. v. Universal Film Mfg. Co., 243 U.S. 502 (1917)	8, 23
Standard Oil Co. (Indiana) v. United States 283 U.S. 163 (1931)	11
Textile Prods., Inc. v. Mead Corp., 134 F.3d 1481 (Fed. Cir. 1998)	21

TABLE OF AUTHORITIES—Continued

	Page
Transparent-Wrap Machine Corp. v. Stokes & Smith Co., 329 U.S. 637 (1947)	11
United States v. General Electric Co., 272 U.S. 476 (1926)	*passim*
United States v. Univis Lens Co., 316 U.S. 241 (1942)	7, 8, 9
STATUTES	
35 U.S.C. § 154	2, 5
35 U.S.C. § 271(e)	5
BOOKS, ARTICLES, AND OTHER MATERIALS	
Carliss Y. Baldwin & Kim B. Clark, *Managing in an Age of Modularity*, *in* HARVARD BUSINESS REVIEW ON MANAGING THE VALUE CHAIN 1 (2000)	15
ROBERT B. HANDFIELD & ERNEST L. NICHOLS, SUPPLY CHAIN REDESIGN: TRANSFORMING SUPPLY CHAINS INTO INTEGRATED VALUE SYSTEMS (2002)	15
Mark A. Lemley & Carl Shapiro, *Patent Holdup and Royalty Stacking*, 85 TEX. L. REV. 1991 (2007)	17
NEWTON'S TELECOM DICTIONARY (2004)	16
Richard Normann & Rafael Ramírez, *From Value Chain to Value Constellation: Designing Interactive Strategy*, *in* HARVARD BUSINESS REVIEW ON MANAGING THE VALUE CHAIN 185 (2000)	15
MICHAEL E. PORTER, COMPETITIVE ADVANTAGE (1985)	18
ROBERT B. REICH, THE WORK OF NATIONS (1992)	15, 16

TABLE OF AUTHORITIES—Continued

	Page
HERBERT F. SCHWARTZ, PATENT LAW AND PRACTICE (2003)	11, 12
Carl Shapiro, *Navigating the Patent Thicket: Cross Licenses, Patent Pools and Standard-Setting*, in 1 INNOVATION POLICY AND THE ECONOMY 119 (Adam Jaffe *et al.*, eds. 2001)	19
U.S. Dep't of Justice and Fed. Trade Comm'n, *Antitrust Guidelines for the Licensing of Intellectual Property* (April 6, 1995)	17
U.S. Dep't of Justice and Fed. Trade Comm'n, *Antitrust Enforcement and Intellectual Property Rights: Promoting Innovation and Competition* (April 2007)	19
PETER VAN ZANT, MICROCHIP FABRICATION (2000)	16

IN THE

Supreme Court of the United States

No. 06-937

QUANTA COMPUTER, INC., QUANTA COMPUTER USA, INC., Q-LITY COMPUTER, INC.,
Petitioners,

v.

LG ELECTRONICS, INC.,
Respondent.

On Writ of Certiorari to the United States Court of Appeals for the Federal Circuit

BRIEF FOR *AMICI CURIAE* NOKIA CORPORATION AND NOKIA INC. IN SUPPORT OF PETITIONERS

INTEREST OF *AMICI CURIAE*[1]

Nokia Corporation and Nokia Inc. (collectively "Nokia") form the world's leading manufacturer of wireless communication devices, and Nokia is a leader in mobile networks. Nokia Inc. operates in the

[1] Counsel for both parties have consented to the filing of this brief, and their consents have been filed with the Clerk of this Court. No counsel for either party had any role in authoring this brief, and no person other than the named *Amici* and their counsel has made any monetary contribution to the preparation and submission of this brief. *See* Rule 37 & 37.6.

United States. In 2006, Nokia's worldwide net sales totaled $54.3 billion. Nokia sold over 345 million mobile devices worldwide, many millions of which were sold in the United States. Nokia employs over 68,000 people worldwide and invests heavily in research and development. As a leading innovator in the wireless space, Nokia owns approximately 10,000 patent families.

Technology companies such as Nokia rely both upon the patent laws, which provide a grant of exclusive rights as an incentive for capital investment in research and development, and upon the contract laws, which allow parties in the technology markets to sell, license and structure their capital investments as efficiently as possible. Nokia files this brief to urge reversal of the Federal Circuit's decision below, which tips the balance too far in favor of patent rights, and to find patent exhaustion on the facts of this case. At the same time, Nokia urges this Court not to announce too sweeping a rule of patent exhaustion. Flexibility in contracting over intellectual property rights is a necessary feature of the efficient operation of technology markets. Nokia respectfully urges this Court to announce a rule of patent exhaustion that will prevent "double dipping" by patent holders while still allowing flexibility in licensing technology.

SUMMARY OF ARGUMENT

By statute, a patent grants its owner "the right to exclude others from making, using, offering for sale, or selling" the patented invention in the United States. 35 U.S.C. § 154. When a patent holder first sells patented goods or authorizes licensees to sell

such goods, it surrenders this right to exclude and its patent rights are said to be exhausted.

The patent exhaustion doctrine is an important check on the ability of patent holders to exploit the modern technology industry, which relies on complex supply chains to assemble products that ultimately reach the consumer. Robust enforcement of the patent exhaustion doctrine will prevent patent holders from extracting multiple royalties for the right to exclude for the same invention. The patent holder should be able to pick a point in the supply chain at which to extract royalties—but once that point is chosen and the patent holder receives value for its invention, the patent holder should be stuck with its choice.

In the case before the Court, the Federal Circuit has departed from these principles, allowing a patent holder to unilaterally extend patent rights past the point of first sale to downstream users of goods that embody the patented invention. This Court's precedents are to the contrary, and should be enforced here to prevent the patent holder from engaging in such "double dipping."

The patent exhaustion doctrine, however, should at the same time recognize the need for technology companies and others to have flexibility in contracting their intellectual property rights. Patent holders should be free to license their patent rights under various restrictions—bounded at the outer extremes by the antitrust laws.

For instance, this Court's precedents allow a patent owner to license another party to practice the invention in only a particular geographic area or for only a particular purpose. *See General Talking*

Pictures Corp. v. Western Electric Co., 305 U.S. 124 (1938). The patent owner can even set the price at which its licensee sells the article manufactured under the license. *United States v. General Electric Co.*, 272 U.S. 476 (1926).

The flexibility of these contractual arrangements has well served the technology industry and has allowed markets efficiently to value, use and exploit patented inventions. This, in turn, has fostered robust markets for intellectual property rights and great technological progress—exactly the purpose of the patent laws.

The patent exhaustion doctrine should apply where the patent holder has fully exploited the value of the patent—for example by receiving royalties in exchange for allowing use or sale of the invention. If, upon objective examination of the substance of the contract in question, the patent holder has received such value for its invention, it may be presumed to have consented to goods embodying the invention entering the stream of commerce. The doctrine should be flexibly applied, however, to take into account the myriad types and scope of patents and contracts in the marketplace. Absolute rules can have unintended consequences, especially for technology industries that rely upon a complex web of contracts and intellectual property rights. Accordingly, a variety of licensing arrangements, agreements not to assert patents against contract counterparties, and other contract agreements in the technology area should remain unlimited by the patent exhaustion doctrine.

ARGUMENT

Patents embody a balance between free competition and government-granted exclusive rights. "The Patent Clause itself reflects a balance between the need to encourage innovation and the avoidance of monopolies which stifle competition without any concomitant advance in the 'Progress of Science and useful Arts.'" *Eldred v. Ashcroft*, 537 U.S. 186, 215 (2003) (citing *Bonito Boats, Inc. v. Thunder Craft Boats, Inc.*, 489 U.S. 141, 146 (1989)); *see Mazer v. Stein*, 347 U.S. 201, 219 (1954).

Patent law pervasively seeks to strike a balance between these competing interests. Some features of patent law ensure adequate returns to the large fixed costs of research and development. For example, Congress has decided upon a 20-year term for patents. *See* 35 U.S.C. § 154. Other features of patent law seek to preserve opportunities for future innovation. For example, there is a statutory safe harbor for activities that would otherwise constitute patent infringement if undertaken for purposes reasonably related to the development and submission of information under a federal law that regulates drugs. 35 U.S.C. § 271(e); *Eli Lilly and Co. v. Medtronic, Inc.*, 496 U.S. 661 (1990) (exemption applies to medical devices); *Merck KGaA v. Integra Lifesciences I, Ltd.*, 545 U.S. 193 (2005) (exemption applies to preclinical research).

This balance has served the United States patent system and the progress of science in the nation very well. The key to this balance is the recognition that there are interests in promoting innovation on *both* sides of any patent. As this Court stated in *Bonito Boats*, "[f]rom their inception, the federal patent laws have embodied a careful balance between the need

to promote innovation and the recognition that imitation and refinement through imitation are both necessary to invention itself and the very lifeblood of a competitive economy." 489 U.S. at 146.[2]

In this case, this Court should interpret the patent exhaustion doctrine to restore a balance, upset by the Federal Circuit in the decision below, between a patent owner's freedom to contract with its immediate purchasers and licensees, and the right of downstream purchasers to be free from duplicative exploitation that exceeds the purposes of the patent laws. Such a balance will allow appropriate flexibility in contractual arrangements involving patented technologies.

I. THIS COURT HAS LONG STRUCK A BALANCE BETWEEN PATENT EXHAUSTION AND LEEWAY FOR PATENTEES TO CONTRACT WITH RESPECT TO PATENT RIGHTS

This Court's precedents provide that patent rights are extinguished when a patent owner has received full value for parting with its right to exclude others from practicing the invention. At the same time, they allow patent holders (subject, at the outer limits, to the antitrust laws if market power is established) to contract freely with purchasers or licensees with respect to patent rights. While reversal is called for

---

[2] The related context of copyright law also requires a balance between preserving incentives to intellectual property holders and p[illegible]ecting the rights of others to develop new technologies such that "the gains on the copyright swings would exceed the losses on the technology roundabouts." *Metro-Goldwyn-Mayer Studios Inc. v. Grokster, Ltd.*, 545 U.S. 913, 960 (2005) (Breyer, J., concurring).

here because patent exhaustion is appropriate on the facts of this case, patent exhaustion should not be construed so sweepingly as to eliminate the flexibility provided in the latter line of cases.

A. Patent Laws Provide A Circumscribed Set Of Rights That May Not Be Unilaterally Extended By The Patent Owner To Downstream Purchasers

This Court has long held that the unrestricted and authorized sale of a product embodying a patent exhausts the patentee's power over the product. For example, in *United States v. Univis Lens Co.*, 316 U.S. 241 (1942), the Court stated:

> [T]he patent law is fulfilled with respect to any particular article when the patentee has received his reward for the use of his invention by the sale of the article, and . . . once that purpose is realized the patent law affords no basis for restraining the use and enjoyment of the thing sold. . . . The first vending of any article manufactured under a patent puts the article beyond the reach of the monopoly which that patent confers.

Id. at 251. Thus, "where a patentee makes a patented article, and sells it, he can exercise no future control over what the purchaser may wish to do with the article after his purchase" because "[i]t has passed beyond the scope of the patentee's rights." *United States v. General Electric Co.*, 272 U.S. 476, 489 (1926) (citations omitted).

Of particular relevance to the current case are this Court's decisions concerning patent holders' attempts to fix notices to patented articles to try to retain rights over the articles once they are in commerce. In

Motion Picture Patents Co. v. Universal Film Mfg. Co., 243 U.S. 502 (1917), for example, the plaintiff owned a patent directed to the mechanism that feeds film through the projectors. The Court found that "the mechanism covered by the patent in suit is the only one with which motion picture films can be used successfully." *Id.* at 508. The patent holder entered into a contract with a film projector manufacturer, licensing that company to make and sell film projectors under the patents. In the contract, however, the manufacturer covenanted to attach a notice to each film projector that it was only to be used with films owned or leased by plaintiffs. *Id.* at 506-07. Thus, the patent owner was attempting to restrict the use of the projector even against downstream purchasers and users of the projector. This Court refused to allow such restrictions.

Motion Picture noted that "the notice restrictions have nothing to do with the invention which is patented, but relate wholly to the materials to be used with it." *Id.* at 512. Thus, the Court concluded that the patent holder should not be permitted "by notice attached to its machine," to "in effect, extend the scope of its patent monopoly by restricting the use of it to materials necessary in its operation, but which are no part of the patented invention, or to send its machines forth into channels of trade of the country subject to conditions as to use or royalty to be paid, to be imposed thereafter at the discretion of the patent owner." *Id.* at 516.

Similarly, in *Univis Lens Co.*, 316 U.S. 241, the United States sought to restrain a licensing scheme entered into by the owner of patents related to eyeglass lenses. The patent owner licensed a subsidiary to manufacture lenses and to sell them

to designated licensees of the corporation. The manufacturing subsidiary paid the patent owner $0.50 per pair of lenses. The designated licensees included "finishing retailers" who would polish the blank lenses for prescription and sell them to "prescription retailers" who, in turn, sold them to consumers. The patent owner set the prices for each sale: manufacturer to polisher, polisher to retailer, retailer to consumer. This Court did not allow the patent owner to use the patent laws to coerce restrictions on downstream sales. The reason the patent owner could not place restrictions on those sales was that the patent owner had allowed an authorized sale of the lenses to take place: "the authorized sale of an article which is capable of use only in practicing the patent is a relinquishment of the patent monopoly with respect to the article sold." *Id.* at 249. The Court reasoned that sale of a patented article (or an article that has no use other than to infringe the patent) "exhausts the monopoly in that article and the patentee may not thereafter, by virtue of his patent, control the use or disposition of the article." *Id.* at 250.

B. A Patent Owner Also Retains The Power To Set the Terms for Contracting Away Its Patent Rights

In contrast to the above patent exhaustion precedents, many decisions of this Court have upheld creative contractual restrictions imposed by patent holders. For example, in *General Electric Co.*, 272 U.S. 476, the United States sought to enjoin General Electric's ("GE") licensing of patents relating to incandescent electric light bulbs. It was undisputed that General Electric owned three basic patents that "cover completely the making of the modern electric

lights with the tungsten filaments, and secure to the General Electric Company the monopoly of their making, using, and vending." *Id.* at 481. GE licensed these patents to the Westinghouse Company with the condition that Westinghouse could sell light bulbs only at the prices set by GE.

This Court held that GE's contract was permissible:

> Conveying less than title to the patent or part of it, the patentee may grant a license to make, use and vend articles under the specifications of his patent for any royalty, or upon any condition the performance of which is reasonably within the reward which the patentee by the grant of the patent is entitled to secure.

Id. at 489. The Court in *General Electric* confirmed that the right to set prices is within the patent grant as "[o]ne of the valuable elements of the exclusive right of a patentee is to acquire profit by the price at which the article is sold." *Id.* at 490.

This Court has also confirmed that licenses can include restrictions on the field of use in which the licensee is permitted to make or sell the patented invention. In *General Talking Pictures Corp. v. Western Electric Co.*, 305 U.S. 124 (1938), a patent holder licensed to a manufacturer its patents for sound reproducing equipment, but expressly prohibited the sale of the equipment to movie theaters. The licensee made equipment that embodied the patented inventions, but, in violation of the license, sold the equipment to a supplier for movie theaters. The Court found that the license restriction was legal, and that, once the license was violated, the sales were outside the scope of the license and subject to claims for patent infringement. *Id.* at 127.

The antitrust laws provide a check to prevent a patent holder from enforcing restrictions via contract that are beyond the reasonable scope of a patent grant. *See Illinois Tool Works, Inc. v. Independent Ink, Inc.*, 547 U.S. 28, 46 (2006) (holding that, while market power cannot be presumed from a patent, where plaintiff can establish market power, an agreement that ties a patent license to purchase of non-patented items may violate the antitrust laws). The antitrust laws do not automatically void license restrictions; for example, licenses that contain grant-back clauses are not per se illegal. *See Transparent-Wrap Machine Corp. v. Stokes & Smith Co.*, 329 U.S. 637, 647-48 (1947) (finding "no specific prohibition against conditioning a patent license on the assignment by the licensee of improvement patents" but recognizing that these practices do not necessarily have "immunity under the anti-trust laws"). Patent pooling through cross-licensing is also permissible provided the pooling does not have an anti-competitive effect. *See Standard Oil Co. (Indiana) v. United States*, 283 U.S. 163, 175 (1931) (finding a patent pool was not illegal when it was not "used to effect a monopoly, or to fix prices, or to impose otherwise an unreasonable restraint upon interstate commerce").

C. Application Of Patent Rights To Downstream Purchasers Turns Largely On Whether An Initial Sale Or Use Was "Authorized"

A license provides "authority" for a person other than the patent owner to practice the invention. That authority "may be limited to geographical areas, time periods, certain uses, or a combination thereof." HERBERT F. SCHWARTZ, PATENT LAW AND PRACTICE 40, 42 (2003). If the licensee exceeds the scope of his

authority—e.g., by selling outside the designated geographic area—the patent owner may sue it for patent infringement. *Id.* at 152-53. The Court in *General Electric* explained that, when a licensee acts beyond the scope of the rights conveyed by the patent holder, the licensee's actions are unauthorized and it "may be held for damages and enjoined" under the patent laws. 272 U.S. at 490.

The importance of a sale being "authorized" or not is highlighted by this Court's precedents regarding a property owner's right to repair a patented article that he or she owns. In *Aro Manufacturing Co. v. Convertible Top Replacement Co.*, 365 U.S. 336 (1961) ("Aro I"), the patent at issue was for a combination of elements comprising a convertible roof top for an automobile. Each separate element of the roof top was not patentable; the patent was for the combination. Car owners found that the fabric on the roof—one element of the combination—would wear out. After-market suppliers offered replacement fabric to the car owners, and the patent owner sued the suppliers. The Court held that it was perfectly permissible for the car owners to repair their roof tops when a portion wore out; it was their property. What the car owners could not do was *reconstruct* a roof top from scratch; that would be an infringement. Thus, the suppliers of replacement fabric could not be liable for contributing to, or inducing, infringement.

In the related case of *Aro Manufacturing Co. v. Convertible Top Replacement Co.*, 377 U.S. 476 (1964) ("Aro II"), the issue was similar with one crucial difference: the cars at issue were Ford models as opposed to General Motors cars as in Aro I. The significance was that General Motors in Aro I had a license to the combination patent at issue—the

original manufacture was *authorized* by the patent owner. In Aro II, Ford did not have a license. Thus, the original manufacture and sale by Ford of cars with convertible roof tops was not authorized. Without an original authorization to practice the patented invention, the repair was an infringement:

> The reconstruction-repair distinction is decisive [] only when the replacement is made in a structure whose original manufacture and sale have been licensed by the patentee, as was true only of the General Motors cars; when the structure is unlicensed, as was true of the Ford cars, the traditional rule is that even repair constitutes infringement.

Id. at 480. Thus, this Court concluded in Aro II that the fabric suppliers infringed by assisting car owners in repairing their roof tops. *Id.* at 485-86.

The determining factor in these decisions was the original purchase or use of the patented combination. If the original purchase or use was "authorized"—*i.e.*, no contract was violated—any subsequent repair of the patented combination was acceptable. If the original purchase was not authorized, by contrast, subsequent repairs constituted infringements for which patent remedies were available.

* * *

In sum, contracts in the patent marketplace are as diverse as imagination and economic incentives allow. The overwhelming majority of intellectual property rights are bought, sold, divided and licensed—and are never the subject of litigation. This is how it should be. Against the backdrop of contract law and property interests created by federal patent statutes, these market forces efficiently

allocate rights between parties. In evaluating restrictions placed on the use of patented articles and methods, the key issue is the contractual relationship between the patent holder and the person licensed under the patent. Patent exhaustion to protect downstream acquirers should be balanced against patent holders' freedom to contract.

II. STRIKING A BALANCE BETWEEN PATENT EXHAUSTION AND PATENTEE FREEDOM TO CONTRACT IS ESPECIALLY IMPORTANT TO TECHNOLOGY COMPANIES, WHICH RELY UPON GLOBAL SUPPLY CHAINS AND MYRIAD CONTRACTING ARRANGEMENTS TO EFFICIENTLY ALLOCATE CAPITAL AND PRODUCE CONSUMER GOODS

The patent exhaustion doctrine is an important counterbalance to prevent undue leverage from residual patent rights that can occur as a result of technology companies' reliance on supply chains. There should be flexibility in the doctrine, however, to allow its underlying purposes to be met without unduly restricting technology companies' ability to contract.

A. Supply Chains For Technology Products Provide Opportunities For Royalties To Be Gathered At Different Points Along the Chain

A supply chain is a sequence of steps and transactions often performed by different firms in different locations needed to produce a final manufactured commodity. Each step adds value to

the specific good.[3] Supply chains are now often referred to as "value chains" or "value systems."[4] The manufacture and distribution of mobile phones is a value chain that illustrates the intersection of contract and patent rights.

Mobile phones and personal electronics are ubiquitous today. These devices are complex, assembled in stages through a global supply chain.[5] For in-

---

[3] *See* Richard Normann & Rafael Ramírez, *From Value Chain to Value Constellation: Designing Interactive Strategy*, *in* HARVARD BUSINESS REVIEW ON MANAGING THE VALUE CHAIN 185, 187 (2000) ("[E]very company occupies a position on a value chain. Upstream, suppliers provide inputs. The company then adds value to these inputs, before passing them downstream to the next actor in the chain, the customer (whether another business or the final consumer).").

[4] *See* ROBERT B. HANDFIELD & ERNEST L. NICHOLS, SUPPLY CHAIN REDESIGN: TRANSFORMING SUPPLY CHAINS INTO INTEGRATED VALUE SYSTEMS 5 (2002).

[5] "By breaking up a product into subsystems, or modules, designers, producers and users have gained enormous flexibility. Different companies can take responsibility for separate modules and be confident that a reliable product will arise from their collective efforts." Carliss Y. Baldwin & Kim B. Clark, *Managing in an Age of Modularity*, *in* HARVARD BUSINESS REVIEW ON MANAGING THE VALUE CHAIN 1, 3-4 (2000). For instance, one author has suggested that modern corporations, unlike corporations at the middle of the last century, generally do not control all aspects of production such as owning factories, machinery and warehouses. ROBERT B. REICH, THE WORK OF NATIONS 81 (1992). Instead, there is a "web of enterprise" in which major firms contract out the production of components and sell to licensed dealers the right to market finished products. *Id.* at 93. In the global web of modern manufacturing, products are international "composites" and, for instance, "[a] sports car [may be] financed in Japan, designed in Italy, and assembled in Indiana, Mexico and France, using advanced electronic components invented in New Jersey and

stance, the technical heart of a mobile phone is the chip that governs its function.[6]

A "chipset" is a collection of chips. In a mobile phone, the chipset contains the instructions that allow conversion of analog speech signal into coded digital signal. The chipset also organizes and packages data to be sent via the airwaves. The chipset sets up and controls the mobile phone's connection with the local radio tower.

There are many manufacturers of chips and chipsets.[7] These chipsets are then mounted in a module. The module is incorporated into a handset. The handset contains an antenna, a battery, a keyboard and a display—it is the device with which consumers are most familiar.

The handset is activated with software, often for a particular consumer. When used in a telecommunications system, the handset exchanges data with equipment manufactured by many other companies, such as the radio tower, the base station, and the switch or server operated by the phone company or Internet provider.

Parties at each step of the value chain often enter contracts and licenses with each other. With so many components required to form a mobile phone or other

---

fabricated in Japan." *Id.* at 112. Such conclusions are especially true for complex devices such as mobile phones.

[6] *See* NEWTON'S TELECOM DICTIONARY 166 (2004) ("Telephone systems . . . [t]ypically [] have one main CPU—a chip—which controls the various functions in the telephone."). A "CPU" or "Central Processing Unit" is "[t]he part of a computer which performs the logic, computational and decision-making functions." *Id.*

[7] *See* PETER VAN ZANT, MICROCHIP FABRICATION 11-12 (2000).

complex electronic devices, parties seek to avoid risk that would jeopardize their right to assemble products. One risk to be avoided is that of the patent "hold-up," wherein a patent directed at a single low-value component or feature of a complex device may put the entire device at risk of patent infringement. *See eBay Inc. v. MercExchange, L.L.C.*, 126 S. Ct. 1837, 1842 (2006) (Kennedy, J., concurring). Hold-ups undermine the goals of the patent system by providing windfalls to patent owners far in excess of their actual innovation.[8]

Patent exhaustion is an important doctrine to allow manufacturers the ability to purchase components free of residual patent rights that put at risk their entire product.

B. The Patent Exhaustion Doctrine Should Leave Technology Companies Adequate Breathing Room To Contract

Nonetheless, patent exhaustion should not be found equally in every patent contract. Technology companies enter many and varied contracts concerning their intellectual property. Such contracts benefit both the companies that enter into the agreements and the consumers who gain from the increased efficiency such agreements can foster.[9]

---

[8] *See* Mark A. Lemley & Carl Shapiro, *Patent Holdup and Royalty Stacking*, 85 TEX. L. REV. 1991 (2007) (describing in detail the operation of patent hold-ups and the problems that they create).

[9] *See* U.S. Dep't of Justice and Fed. Trade Comm'n, *Antitrust Guidelines for the Licensing of Intellectual Property* § 2.3 (April 6, 1995) (discussing how licensing "can facilitate integration of the licensed property with complementary factors of production"

For some patents and innovations, Nokia and other technology companies may rely upon the right to exclude and seek to market products embodying their technologies. Sales of a product with exclusive features differentiates the patent holder's products and services and provides a return on investment.[10]

Nokia and others in the communications field are also involved in standards setting organizations. For patents declared essential to a standard, Nokia and others offer fair, reasonable and non-discriminatory ("FRAND" or "RAND") license terms. These are generally non-exclusive licenses given to those who practice the relevant standard, though they can and often do contain various restrictions.

Nokia, like other companies, licenses some of its patents. For this licensing, Nokia collects royalties in consideration for giving up its right to exclude.[11] Generally, Nokia collects royalties at the point in the value chain at which there is a complete user-enabled device.

Nokia and others also enter restricted licenses for certain purposes, *e.g.*, joint research and joint development. These licenses may be limited to certain fields of use or geographical areas.

---

and how "[t]his integration can lead to more efficient exploitation of the intellectual property, benefiting consumers").

[10] MICHAEL E. PORTER, COMPETITIVE ADVANTAGE 3 (1985) ("There are two basic types of competitive advantage: cost leadership and differentiation.").

[11] *See, e.g., Deprenyl Animal Health, Inc. v. University of Toronto Innovations Foundation*, 297 F.3d 1343, 1354 (Fed. Cir. 2002) ("A patentee who grants a license [] contracts for valuable consideration in exchange for surrendering the right to exclude the licensee from practicing the patented invention.").

Many technology companies like Nokia also own large worldwide portfolios of patents, meaning that they own issued patents in many jurisdictions such as the United States, Europe or Japan. These companies occasionally enter mutual, portfolio-wide agreements with other companies not to assert current or future patent rights against each other ("non-asserts"). There may be many business reasons for entering such an arrangement.[12] For instance, the number of patents may be a metric for some other aspect of the company's operations such as its research investments. The non-assert may be related to another business relationship between the parties. There may be a desire to avoid patent "thickets"—a term that describes the fact that modern electronics devices often implicate hundreds of different patent rights that can be difficult to separate and identify.[13]

Depending upon the objective circumstances of the transaction and the activities of the licensee, non-assert provisions may or may not implicate the type of "consent for value" exchange that justifies the patent exhaustion doctrine. Contracts that include non-assert provisions may be part of a larger business transaction and may not reflect authorization to practice a particular invention or provide for the extraction of royalties from a particular point in the supply chain. Broad non-

---

[12] *See* U.S. Dep't of Justice and Fed. Trade Comm'n, *Antitrust Enforcement and Intellectual Property Rights: Promoting Innovation and Competition* 88-90 (April 2007) (describing the implementation and the efficiencies of non-assertion clauses).

[13] *See* Carl Shapiro, *Navigating the Patent Thicket: Cross Licenses, Patent Pools and Standard-Setting*, in 1 INNOVATION POLICY AND THE ECONOMY 119, 119-22 (Adam Jaffe *et al.*, eds. 2001).

assert provisions should not result in patent exhaustion, for instance, if the non-assert does not reflect an extraction of royalties for particular patented inventions. Factors that bear on this analysis might include whether the parties to the non-assert are competitors and whether the patent owner is attempting to extract royalties from multiple points in the supply chain.

The Court's decision here should give companies the flexibility to prove that the substance of the rights granted and used under a given contract do not implicate the patent exhaustion doctrine. For example, the holder of patents related to the functions of mobile phone chipsets (whether they are patents on the chipsets alone or chipsets combined with other known and non-patented components such as an antenna or keyboard) may license its patents to a chipset manufacturer to make the patented chipsets. If the effect of the transaction is that the patent owner exploited the value of its patented invention in consenting to use of its chipset inventions, the patent exhaustion doctrine should apply. In such a case, the patent holder has received value for giving up its right to exclude and should not be allowed to extract additional royalties from downstream use of the chipset in the value chain, especially where that chipset is used as intended and incorporated with other known components.

A vigorous application of the doctrine, however, should not result in bright-line, inflexible rules with unintended consequences. Parties enter contracts for myriad reasons, and contracts concerning patents—for instance non-assert provisions—should not necessarily result in patent exhaustion. Such a result

would chill contracts and undermine commerce, especially in the technology industry.

Of course, this does not mean that parties should be able to escape the patent exhaustion doctrine by expressing their subjective intent to reserve rights. This would permit improper "double dipping" at multiple points in the value chain. The test should be an objective analysis of the specific contract in question as well as activities performed pursuant to that contract.

In short, *Amici* respectfully urge this Court to adopt an approach that allows flexibility depending on the contract that governs the patent rights at issue and other relevant circumstances.[14]

III. IN THIS CASE, THE FEDERAL CIRCUIT IMPROPERLY ALLOWED MULTIPLE ROYALTIES FOR THE SAME PATENTED INVENTION

In the case before this Court, *LG Electronics, Inc. v. Bizcom Electronics, Inc.*, 453 F.3d 1364 (Fed. Cir. 2006), the Federal Circuit permitted patent restrictions to be unilaterally imposed on downstream purchasers. This gives patent holders wind-

---

[14] Such distinctions can be administered by courts. For example, an analogous situation in which flexibility is required is the judicial analysis of whether a particular license contains enough exclusive rights to give the licensee standing to sue infringers on its own behalf without naming the patent owner as a necessary co-plaintiff. *See Textile Prods., Inc. v. Mead Corp.*, 134 F.3d 1481, 1484 (Fed. Cir. 1998) ("Determining whether a licensee is an exclusive licensee or a bare licensee is a question of ascertaining the intent of the parties to the license as manifested by the terms of their agreement and examining the substance of the grant.").

falls and undue leverage because it permits royalties to be extracted multiple times for the same invention at different points in the value chain. Under the approach *Amici* have urged above, therefore, reversal is required.

In *LG v. Bizcom*, the patent owner licensed its patents to Intel, a manufacturer of computer chips. It appears from the record that these patents relate to chips and the combination of chips with known computer components. Intel, in turn, sold chips to petitioners. Plaintiff LG sued petitioners under some of the patents licensed to Intel. The relevant patents contained "system" claims, with the system including a computer chip combined with other known components. Intel did not use the system claims in manufacturing it chips.

The district court held that the system claims were exhausted because Intel was licensed under the patents, and sold chips to the petitioners. The Federal Circuit reversed, reasoning that exhaustion did not apply because the license between LG and Intel was not unconditional but contained restrictions. In particular, "[t]he LGE-Intel license expressly disclaims granting a license allowing computer system manufacturers to combine Intel's licensed parts with other non-Intel components. Moreover, this conditional agreement required Intel to notify its customers of the limited scope of the license, which it did." *Id.* at 1370.

The error in the Federal Circuit's analysis is twofold. First, from the record and decision, it appears that Intel fully complied with the terms of its contract with LG, the patent owner; Intel was free to sell its chips to petitioners (albeit with a notice accompanying the sale). The sales therefore were

authorized—they were fully within the scope of the rights granted to Intel by the patent owner. Second, the petitioners have no contract with the patent owner.

Because the sale from Intel to petitioners was "authorized" and because the patent owner received compensation from Intel for licensing its patents, the Federal Circuit should have applied the patent exhaustion doctrine. As with the notice affixed to the movie projectors in *Motion Picture Patents v. Universal Film*, a patent owner may not amplify its right to exclude by giving notice to a party that has purchased property from a licensed seller.[15]

The policy underlying the patent exhaustion doctrine should require an analysis of whether the patent holder has exploited the value of the patent—for example by receiving royalties in exchange for allowing use or sale of the invention—such that the patent holder can be said to have consented to goods embodying the invention entering the stream of commerce. Where the patent holder has made the choice to extract royalties at a particular point in the value chain, the patent holder should bear the consequences of that choice. The patent laws allow recovery as an incentive to invest in research and development; they do not allow an unlimited right to extract multiple royalties for the same inventions.

---

[15] *Cf. Bobbs-Merrill Co. v. Straus*, 210 U.S. 339, 350 (1908) (applying the first sale doctrine to copyright and holding: "In our view the copyright statutes, while protecting the owner of the copyright in his right to multiply and sell his production, do not create the right to impose, by notice, such as is disclosed in this case, a limitation at which the book shall be sold at retail by future purchasers, with whom there is no privity of contract.").

CONCLUSION

For the reasons stated above, the decision below should be reversed or vacated.

Respectfully submitted,

RONALD A. ANTUSH
MATTHEW P. HARPER
TODD D. LEITSTEIN
DAVID L. COHEN
EVERETT UPSHAW
NOKIA INC.
6000 Connection Drive
Irving, TX 75039
(972) 894-5000

KATHLEEN M. SULLIVAN
Counsel of Record
BRIAN C. CANNON
QUINN EMANUEL URQUHART
OLIVER & HEDGES, LLP
555 Twin Dolphin Drive,
Suite 560
Redwood Shores, CA 94065
(650) 801-5000

November 13, 2007

Counsel for Amici Curiae

56535 H

24pg

No. 06-937

In the Supreme Court of the United States

QUANTA COMPUTER, INC., QUANTA COMPUTER USA, INC., Q-LITY COMPUTER, INC.,

Petitioners,

v.

LG ELECTRONICS, INC.,

Respondent.

On Writ of Certiorari
to the United States Court of Appeals
for the Federal Circuit

BRIEF OF *AMICUS CURIAE* PAPST LICENSING GMBH & CO. KG IN SUPPORT OF RESPONDENT

Jerold B. Schnayer
Steven E. Feldman
Leonard Friedman
Sherry L. Rollo
Welsh & Katz, Ltd.
120 South Riverside Plaza
22nd Floor
Chicago, Illinois 60606
(312) 655–1500

Lawrence Rosenthal
(Counsel of Record)
Chapman University School
of Law
One University Drive
Orange, California 92866
(714) 628–2650

Counsel for Amicus Curiae

WILSON-EPES PRINTING CO., INC. – (202) 789-0096 – WASHINGTON, D. C. 20002

BEST AVAILABLE COPY

QUESTION PRESENTED

Whether a patentee that grants the licensee a right to use and sell patented systems and methods in a specified manner retains the right to bring infringement actions against the licensee's customers who knowingly use the patented systems and methods in a manner inconsistent with the licensing agreement.

TABLE OF CONTENTS

QUESTION PRESENTED i

TABLE OF CONTENTS ii

TABLE OF AUTHORITIES iii

INTEREST OF THE AMICUS CURIÆ 1

STATEMENT 1

SUMMARY OF THE ARGUMENT 2

ARGUMENT 4

CONCLUSION 19

TABLE OF AUTHORITIES

CASES

Adams v. Burke,
84 U.S. (17 Wall.) 453 (1873) 9

Aro Manufacturing Co. v. Convertible Top Replacement Co.,
377 U.S. 476 (1964) 8

Bauer v. O'Donnell,
229 U.S. 1 (1913) 8

Bloomer v. Millinger,
68 U.S. (1 Wall.) 340 (1863) 4

Boston Store of Chicago v. American Gramophone Co.,
246 U.S. 8 (1918) 8

Brulotte v. Thys Co.,
379 U.S. 29 (1964) 6

Chemtron, Inc. v. Aqua Prods.,
830 F. Supp. 314(E.D. Va. 1993) 17

E. Bement & Sons v. National Harrow Co.,
186 U.S. 70 (1902) 5

General Talking Pictures Corp. v. Western Electric Co.,
304 U.S. 175, adhered to on rehearing, 305 U.S. 124 (1938) 4, 5, 6, 9

General Talking Pictures Corp. v. Western Electric Co.,
305 U.S. 124 (1938) 7

Henry v. A.B. Dick Co.,
224 U.S. 1 (1912) 5, 6

Keeler v. Standard Folding Bed Co.,
157 U.S. 659 (1895) 8

Minebea Co. v. Papst,
444 F. Supp. 2d 68 (D.D.C. 2006) 13, 14

Mitchell v. Hawley,
83 U.S. (16 Wall.) 544 (1873) 5, 10

Motion Picture Patents Co. v. Universal Film Mfg. Co.,
243 U.S. 502 (1917) 5, 6

United States v. General Electric Co.,
272 U.S. 476 (1926) 5, 6, 7

United States v. Masonite Corp.,
316 U.S. 265 (1942) 8

United States v. Univis Lens,
316 U.S. 241 (1942) 7, 8, 9

STATUTES

35 U.S.C. § 271 13

35 U.S.C. § 271(d)(2) 10

July 19, 1952, c. 950, 66 Stat. 811 10

OTHER AUTHORITIES

U.S. Dep't of Justice & Fed'l Trade Comm'n, *Antitrust Guidelines for the Licensing of Intellectual Property* (April 6, 1995) 12, 16

Uniform Commercial Code § [illegible] 17

INTEREST OF THE AMICUS CURIÆ

Papst Licensing GmbH & Co. Kg ("PAPST") is in the business of licensing technology from its portfolio of over one hundred patents, including patents directed to innovative electric motor, fan, and hard disk drive technologies that are used in millions of computer related products around the world.[1] PAPST began as a manufacturer of electric fans and motors, but eventually sold its manufacturing business while retaining its patent portfolio, and has enforced that portfolio to obtain fair compensation for the use of its innovative technologies. PAPST has successfully litigated issues similar to those presented here as discussed hereinafter. PAPST files this amicus brief in an effort to assist the Court in understanding the economic rationale for patent licensing arrangements of the type at issue in this case, and the potential anticompetitive implications of the position pressed on this Court by petitioners and their amici.

STATEMENT

Respondent owns several patents related to systems and methods of transmitting and receiving data in personal computers. Pet. App. 2a. Respondent has entered a licensing agreement with Intel Corporation "covering its entire portfolio of

---

[1] The written consent to the filing of this brief of all parties has been lodged with the Clerk. No counsel for a party has authored this brief in whole or in part, and no person or entity other than PAPST has made a monetary contribution to the preparation or submission of this brief.

patents on computer systems and components." Pet. App. 4a. Intel, in turn, sells microprocessors and chipsets to petitioners, who install them in computers. Pet. App. 2a. The licensing agreement between Intel and respondent "expressly disclaims granting a license allowing computer system manufacturers to combine Intel's licensed parts with other non-Intel components. Moreover, this conditional agreement required Intel to notify its customers of the limited scope of the license, which it did." Pet. App. 5a. Petitioners accordingly were made aware that Intel's license did not permit any combination of the patented systems and methods with non-Intel products. Pet. App. 5a.

Respondent brought an infringement action alleging that petitioners had combined microprocessors or other chipsets with other computer components in violation of respondent's patents covering those combinations. Pet. App. 2a. The district court ruled that respondent's licensing the right to practice its patents to Intel precluded it from suing Intel's customers under the doctrine of patent exhaustion. Pet. App. 52a-61a. The court of appeals reversed, concluding that the patent exhaustion doctrine does not apply to a conditional sale that grants the licensee only a limited right to practice a patent. Pet. App. 5a-6a.

SUMMARY OF THE ARGUMENT

When a patentee makes an unconditional sale of a patented invention, the law presumes that the patentee has bargained for and received the full value of the patented invention, which exhausts the patentee's rights under patent law. In these

circumstances, the purchaser has the right to resell the invention free from any patent claims – the so-called doctrine of patent exhaustion. In this fashion, patent exhaustion ensures that a patentee receives a royalty reflecting the full value of its invention, but no more.

Nothing in the patent laws requires a patentee to make an unconditional sale that enables it to recoup the value of its patent rights in a single transaction. Indeed, in many circumstances, buyers who wish to use a patented invention in specific ways do not wish to purchase the full value of the patent rights at issue; and sometimes they cannot afford to do so. In these circumstances, a conditional sale of the patented good promotes competition and consumer welfare by permitting the licensee to acquire limited rights at a correspondingly lower cost, while permitting the patentee to police unauthorized uses of the patented good through the use of patent infringement actions against unauthorized uses and users.

This case involves such a conditional sale. The terms of the license at issue make plain that Intel did not bargain for or receive an unconditional right to use the patented systems and methods; nor did it pay respondent for such an unconditional right. Instead, respondent sold only the right to use its patents with Intel's components; the license preserved the balance of respondent's patent rights, forcing those who wished to combine Intel's licensed products with non-Intel components to negotiate a license with respondent or face infringement liability. When petitioners used the patented systems and methods with non-Intel components, they accordingly infringed a patent right that had

been preserved by the conditional license agreement between respondent and Intel. For that reason, the court of appeals properly held that this infringement action did not run afoul of the doctrine of patent exhaustion.

ARGUMENT

1. The doctrine of patent exhaustion rests on the rule that a patentee is "entitled to but one royalty for a patented machine, and consequently when a patentee has himself constructed the machine and sold it . . . and the consideration has been paid to him for the right, he has then *to that extent* parted with his monopoly, and ceased to have any interest whatever in the machine . . . ." *Bloomer v. Millinger*, 68 U.S. (1 Wall.) 340, 350 (1863) (emphasis supplied). A patentee, however, might choose to part with only a portion of its patent rights, and to receive accordingly more limited consideration. In such cases, the parties can by contract agree that the patentee will surrender only a portion of its patent rights, preserving the balance. After all, nothing in the patent laws repeals freedom of contract.

In *General Talking Pictures Corp. v. Western Electric Co.*, 304 U.S. 175, adhered to on rehearing, 305 U.S. 124 (1938), for example, the patentee granted a license "limited to the manufacture and sale of the [patented] amplifiers for private use, as distinguished from commercial use." *Id.* at 179. Nevertheless, the licensee "knowingly did sell the amplifiers in controversy to the petitioner for that use." *Id.* at 180. The Court observed that "[t]he owner of a patent may grant licenses to manufacture, use, or sell upon conditions not inconsistent with the

scope of the monopoly," *id.* at 181, and added that "[t]here is no warrant for treating the sales of amplifiers to petitioner as if made under the patents or the authority of their owner." *Id.* at 182. Accordingly, the Court held that "[p]etitioner, having with knowledge of the facts bought at sales constituting infringement, did itself infringe the patents embodied in the amplifiers when it leased them for use as talking picture equipment in theaters." *Id. General Talking Pictures* is no anomaly; it is part of a long line of cases holding "any conditions which are not in their very nature illegal with regard to this kind of property, imposed by the patentee and agreed to by the licensee for the right to manufacture or use or sell the [patented] article, will be upheld by the courts." *E. Bement & Sons v. National Harrow Co.*, 186 U.S. 70, 91 (1902). Accord, *e.g.*, *United States v. General Electric Co.*, 272 U.S. 476, 489-94 (1926); *Mitchell v. Hawley*, 83 U.S. (16 Wall.) 544, 547-51 (1873).

Petitioners and the United States associate the rule that a patented good may be conditionally licensed with the decision in *Henry v. A.B. Dick Co.*, 224 U.S. 1 (1912), which the Court later repudiated in *Motion Picture Patents Co. v. Universal Film Mfg. Co.*, 243 U.S. 502 (1917). *See* Pet. Br. 20-23; U.S. Br. 13. Yet in *General Electric*, the Court expressed a different view of *Motion Picture Patents*. In *General Electric*, the Court explained that *Motion Picture Patents* had invalidated a licensing agreement that required that a patented component of a film projector be used only to exhibit the patentee's own films because "the materials or pictures upon which the machine was operated was no part of the patented machine, or of the combination that

produced the patented result." 272 U.S. at 493. In contrast, General Electric's enforcement of a license restricting the price at which a patented invention could be resold through the use of infringement actions did not fall within the rule of *Motion Picture Patents* because "[t]he price at which a patented article sells is a circumstance having a more direct relation and is more germane to the rights of the patentee than the unpatented material with which the patented article may be used." *Id.* For that reason, the Court held that General Electric could properly sue purchasers of the patented item for infringement based on a violation of the licensing resale restriction. *See id.* at 493-94. Subsequently, in *General Talking Pictures* the Court similarly sustained an infringement action based on a restriction as to the type of venues in which the patented invention could be used, as we explain above.[2]

Thus, it should be plain that the rule permitting infringement actions when a patented invention is sold in violation of a licensing restriction survived the demise of *A.B. Dick*, at least when the licensing restriction is not an invalid effort to extend the scope of patent rights to nonpatented articles, as in *Motion Picture Patents*. Indeed, as *General Talking Pictures* explained, "the patentee may grant a license 'upon any condition the performance of which is reasonably

---

[2] Another example that postdates the demise of *Dick* is provided by *Brulotte v. Thys Co.*, 379 U.S. 29 (1964), in which the Court held that a royalty agreement became unenforceable upon the expiration of the patents at issue, *see id.* at 30, but acknowledged that a post-sale licensing restriction prohibiting the removal of the patented machine Yakima County was, prior to the expiration of the patent, "apt and pertinent to protection of the patent monopoly . . . ." *Id.* at 32.

within the reward which the patentee by the grant of the patent is entitled to secure.'" *General Talking Pictures*, 305 U.S. at 127 (quoting *General Electric*, 272 U.S. at 489).

2. Petitioners and their amici rely heavily on *United States v. Univis Lens*, 316 U.S. 241 (1942), in which the Court held that a manufacturer could not enforce a licensing agreement that dictated the terms on which patented lens blanks for glasses could be resold after finishing by both wholesalers and retailers. *See id.* at 250-54. To be sure, the Court's opinion states that "the authorized sale of an article which is capable of use only in practicing the patent is a relinquishment of the patent monopoly," *id.* at 249, but this observation is made in the context of the transactions at issue in that case, which had afforded the patentee full compensation for the value of its patent monopoly once original sales to the wholesalers and retailers had been completed:

> Sale of a lens blank . . . is . . . both a complete transfer of ownership of the blank, which is within the protection of the patent law, and a license to practice the final stage of the patent procedure. In the present case the entire consideration and compensation for both is the purchase price paid by the finishing licensee to the lens company.

Id. at 249-50. It followed that when it sold the blanks, the manufacturer "ha[d] received in the purchase price every benefit of that monopoly that patent law secures to him." *Id.* at 252. Yet, "the purpose of the patent laws is fulfilled with respect to any particular article when the patentee has received his reward for the use of his invention by the sale of

the article, and once that purpose is realized the patent law affords no basis for restraining the use and enjoyment of the thing sold." *Id.* Thus, in *Univis*, the compensation that the patentee had received represented the full value of its patent monopoly, and the resale price agreements were an improper effort to inhibit competition in the wholesale and retail markets. For that reason, the Court held the agreements violated the Sherman Act by extending the patent monopoly into the wholesale and retail markets for the patented blanks. *See id.* at 252-54.[3]

Indeed, in each of the cases in which the Court has applied the doctrine of patent exhaustion, the patentee had received full value for the patented invention upon the sale that was deemed to exhaust its patent rights. *See, e.g., Aro Manufacturing Co. v. Convertible Top Replacement Co.*, 377 U.S. 476, 496-97 (1964) (agreement requiring licensee to use only licensed replacement materials for patented automobile top improperly extended monopoly rights to nonpatented repair materials and was inconsistent with the implied license to use and repair that accompanied the sale); *Keeler v. Standard Folding Bed Co.*, 157 U.S. 659, 666-67 (1895) (purchaser's use of patented good outside of territory in which licensee had been granted exclusive rights

---

[3] *Univis* is part of a line of cases that refuses to treat violations of resale price restrictions as infringements because the initial sale gave the patentee the full value of its patent rights. *See United States v. Masonite Corp.*, 316 U.S. 265, 277-82 (1942) (manufacturer's restrictions on the price and terms of resale at retail); *Boston Store of Chicago v. American Gramophone Co.*, 246 U.S. 8, 25-26 (1918) (manufacturer's restriction on price of resale at retail); *Bauer v. O'Donnell*, 229 U.S. 1, 16-18 (1913) (same).

was not an infringement because patentee received full value when conveying the exclusive right to sell the patented item within the identified territory); *Adams v. Burke*, 84 U.S. (17 Wall.) 453, 456 (1873) (same). The Court accordingly had no occasion in *Univis* or the other cases on which petitioners rely to consider a license structured so that the licensee was not required to pay the full value of the patented item. In *Univis*, in particular, the Court did not purport to reconsider the soundness of *General Talking Pictures*, and it expressly declined to reconsider the holding in *General Electric*. *See* 316 U.S. at 252.

Petitioners, for their part, claim that the validity of a licensing agreement turns on the technicalities of the passing of title; they argue that licensing restrictions can preserve patent rights only in a "conditional sale . . . in which a party does not convey title to the buyer until performance of a conditional precedent," Pet. Br. 19 (footnote omitted), and add that "th[is] principle does not permit sellers to impose conditions subsequent to the transfer of title," *id.* at 20 (emphasis deleted). Accord U.S. Br. 20-21. None of the pertinent cases, however, attach talismanic significance to the moment at which title transfers, and *General Talking Pictures* in particular appears quite inconsistent with this submission. Indeed, petitioners and the United States appear to recognize that the restriction at issue in *General Talking Pictures* operated after title had passed, and instead argue that infringement liability was recognized in that case because the sale made by the licensee was not authorized by the patent license. *See* Pet. Br. 29; U.S. Br. 17-18. As explained above, however, the Court held in *General Talking Pictures*

that commercial use of the patented amplifiers even after title had passed to the licensee infringes because of the purchaser's unauthorized use of the licensed product. Just as the unauthorized use of the patented amplifiers represented an infringement of patent rights by the purchasers, the unauthorized use of Intel components in this case represents an infringement no less.

In any event, precedent aside, the patent laws make plain that the fact that a patentee has authorized what would otherwise be an infringing use – whether by transferring title or otherwise – does not affect its ability to bring an infringement action against unauthorized use: "No patent owner otherwise entitled to relief for infringement or contributory infringement of a patent shall be denied relief or deemed guilty of misuse or illegal extension of the patent right by reason of his having . . . licensed or authorized another to perform acts which if performed without his consent would constitute contributory infringement of the patent." 35 U.S.C. § 271(d)(2).[4] Moreover, basic principles of property law make plain that a purchaser who has obtained only a limited right to practice a patented invention free from infringement claims cannot convey to its purchasers any greater right, whether or not title has passed to the purchaser. After all, as the Court observed in *Mitchell*, "no one can convey . . . any better title than he owns unless the sale is made in market overt, or under circumstances which show that the sell lawfully represented the owner." 83 U.S. at 550.

---

[4] This provision was added to the statute after the decision in *Univis* on which petitioners and their amici so heavily rely. *See* July 19, 1952, c. 950, 66 Stat. 811.

Equally important, the economic realities of licensing argue against the view taken by petitioners and their amici. Patent exhaustion is a doctrine based on substance and not form. As we explain above, patent exhaustion reflects economic reality – an unconditional sale of the right to practice a patent includes a payment to the patentee representing the full value of the patent rights, and for that reason provides the patentee with all the compensation that the patent laws properly support. In a transaction in which the parties agree to convey only more limited rights in the patented item, receiving in turn more limited compensation while preserving the ability of the patentee to police unauthorized use through the patent laws, economic reality is inconsistent with patent exhaustion. Indeed, as we now explain, extending the doctrine of patent exhaustion to transactions that convey only limited rights in return for proportionately limited compensation – whether or not they involve a transfer of title – would be both inefficient and anticompetitive.

3. As the Department of Justice and the Federal Trade Commission have recognized, licensing rather than the unconditional sale of intellectual property frequently has procompetitive effects:

> Field-of-use, territorial, and other limitations on intellectual property licenses may serve procompetitive ends by allowing the licensor to exploit its property as efficiently and effectively as possible. These various forms of exclusivity can be used to give a licensee an incentive to invest in the commercialization and distribution of products embodying the licensed intellectual property

> and to develop additional applications for the licensed property. The restrictions may do so, for example, by protecting the licensee against free-riding on the licensee's investments by other licensees or by the licensor. They may also increase the licensor's incentive to license, for example, by protecting the licensor from competition in the licensor's own technology in a market niche that it prefers to keep to itself. These benefits of licensing restrictions apply to patent, copyright, and trade secret licenses, and to know-how agreements.

U.S. Dep't of Justice & Fed'l Trade Comm'n, *Antitrust Guidelines for the Licensing of Intellectual Property* 5 (April 6, 1995) [hereinafter cited as "*Antitrust Guidelines*"]. The experience of PAPST is consistent with this view.

PAPST has found that potential purchasers of its intellectual property are frequently unwilling or unable to purchase the full value of a patent. Sometimes, a patent is of particular interest in a fledgling industry in which potential purchasers are poorly capitalized and able to afford to purchase only highly limited proprietary rights. Other industries operate on limited profit margins, again inhibiting their ability to pay for full patent rights. Under these and a variety of other circumstances, the most efficient result can be achieved if the parties are able to negotiate a limited license that permits the licensee to practice the patent in the fashion that is of the greatest value to it, paying only for the limited rights conveyed by the license, while permitting the patentee to retain its patent rights with respect to unauthorized uses of the patented invention. In this

fashion, the patentee can use the remedies available under the patent law to police the limitations on the license it has granted. After all, if a licensee resells an item in violation of an otherwise valid licensing restriction, then both the licensee and its transferee are users of a patented technology and therefore infringing parties. *See* 35 U.S.C. § 271.

A pertinent example is provided by the patent license between PAPST and Minebea Co., Ltd. That license granted Minebea, a manufacturer of electric motors for use in computer hard disk drives, the right to make, use and sell its motors under certain PAPST patents that covered its motors. *See Minebea Co. v. Papst*, 444 F. Supp. 2d 68, 100-05 (D.D.C. 2006). Papst also owned patents covering the hard disk drive ("drive patents") products that Minebea's customers made and sold. *Id.* However, because the cost of a license that would permit Minebea to convey the drive patent rights to its customers was considerably higher, Minebea did not purchase such a license. *Id.* PAPST notified each of Minebea's customers they would need to obtain a license in order to use the patented devices by incorporating them into infringing hard disk drives. *Id.* In this fashion, Minebea was able to obtain the right to use the patented motor technology at a price it was willing to pay, in part because PAPST was able to assume the cost of policing the licensing restriction by retaining the right to sue Minebea's customers for infringement of the drive patent rights.[5] Such an

---

[5] Referring to the *Minebea* case, petitioners suggest that under the rule adopted by the court of appeals, infringement actions could be brought "even against purchasers without notice." Pet. Br. 48 (emphasis deleted). In fact, in *Minebea*, PAPST placed each of the purchasers on notice that

arrangement enhances competition by permitting the parties to determine the most efficient way to allocate the costs of policing the licensing restriction.

Accordingly, a rule that a patentee must demand the full value of the patented item when it is sold to others would lead to many anomalies. It could, for example, prevent patentees from licensing others who may be able to do so more efficiently to manufacture the patented invention. Similarly, without the ability to enter a limited license that preserves the licensor's patent rights against unauthorized uses, a combination manufacturer could be forced to buy the component at a much higher price than would be dictated in a market in which more limited licensing rights are available. In such situations, economic efficiency and social welfare are enhanced by permitting the parties negotiating a patent license to decide whether post-sale patent rights should be preserved.[6]

---

they needed to obtain a license from PAPST to utilize PAPST's hard disk drive technology, even though they may have purchased a motor from a motor licensee such as Minebea. *See* 444 F. Supp. 2d at 159 n.67. Petitioners were also placed on notice in this case that Intel's license did not permit them to combine the patented systems and methods with non-Intel products. *See* Pet. App. 5a. Moreover, as we explain below, truly innocent purchasers without notice of a license restriction are usually protected.

[6] Thus, petitioners' bold claim that "[n]o rational company would pay [respondent] any significant royalty for a 'license' to make and sell products that did not include the ability to sell those products free and clear of [respondent]'s patent claims," is inconsistent with PAPST's experience, as well as with the views of the Department of Justice and the Federal Trade Commission we discuss above.

Amicus International Business Machines Corporation agrees that patent law allows "a purchaser to waive exhaustion through express agreement," but adds that the restrictions should not be enforceable against subsequent purchasers "absent an additional express agreement with a downstream purchaser." IBM Br. 21, 22. This approach, however, fails to yield the competitive benefits of our submission. Most obviously, the transaction costs involved in identifying all potential downstream purchasers and negotiating individual licensing agreements with each would be substantial. It would be equally difficult to use state contract law to enforce licensing restrictions against those who have purchased the patented invention from the licensee; such purchasers have no contractual relationship with the patentee that render them liable in contract to the patentee, and the licensee may itself have limited resources, ability, and incentive to enforce contractual restrictions against their own customers.[7]

IBM's proposal would also effectively inhibit cross-license agreements that enable innovators to make "patent peace." Frequently, licensing agreements are reached between parties who want to be able to conduct their respective businesses without the expense of evaluating every one of their potential product against the other's patent claims (which may run into the hundreds or thousands), but who have no interest in policing their respective

---

[7] These practical difficulties are ignored as well by the other amici who advocate the use of contract law to enforce licensing restrictions against those who purchase patented inventions from the licensee. *See* Automotive Engine Rebuilders Ass'n Br. 9-10; Consumer Union Br. 18-20.

customers for infringement of the other's patents, or in buying licenses for their customers. The Department of Justice and the Federal Trade Commission have recognized the procompetitive character of such licensing agreements: "These arrangements may provide procompetitive benefits by integrating complementary technologies, reducing transaction costs, clearing blocking positions, and avoiding costly infringement litigation." *Antitrust Guidelines*, *supra* at 28.

In short, it is unreasonable to expect that multiple or even an omnibus patent license is always going to be more efficient than recognizing the right of a patentee to sue each infringer who refuses to reach a negotiated agreement. When the use of contract law to enforce licensing restrictions is more efficient, then the parties likely will end up going that route, but it makes more sense for the parties to work that out in each case than for this Court to announce a nonstatutory doctrine of patent law that would compel the use of state contract law in every case.

4. Petitioners also seek refuge in what they claim is a general rule against post-sale restrictions that run with personal property. *See* Pet. Br. 19, 46-48. They add that although they were on notice that the licensing agreement between respondent and Intel did not permit them to combine the patented systems and methods with non-Intel parts, respondent's submission threatens even innocent purchasers without notice of a licensing restriction with infringement liability. *See id.* at 48. *See also* Consumers Union Br. at 6-7. In fact, this threat is an empty one.

The Uniform Commercial Code provides protections for purchasers of patented products by implying a warranty against infringement by a seller of a device:

> Unless otherwise agreed a seller who is a merchant regularly dealing in goods of the kind warrants that the goods shall be delivered free of the rightful claim of any third person by way of infringement or the like but a buyer who furnishes specifications to the seller must hold the seller harmless against any such claim which arises out of compliance with the specifications.

U.C.C. § 2-312 (2005). Thus, the law puts the burden on the seller of an infringing device to secure whatever patent rights are necessary to protect its customer, and protects the customer by an implied-in-law warranty. Notably, this provision of the Uniform Commercial Code has not been interpreted to protect purchasers whose own actions give rise to liability for infringement by combining a licensed component into a larger infringing device. *E.g.*, *Chemtron, Inc. v. Aqua Prods.*, 830 F. Supp. 314, 315 (E.D. Va. 1993) ("a buyer, such as Aqua, should not be entitled to purchase goods from a seller, such as Viking, which are not subject to any infringement action, use the non-infringing component goods in an infringing device and incur liability to a third party patentee, Chemtron, and then turn around and attempt to impose liability on the original seller of the component parts."). Thus, our submission does not threaten ordinary retail purchasers with infringement liability, but it properly offers no safe

haven for those who buy a licensed invention and then undertake an infringing use without ascertaining the limits of the licensee's authority.

Accordingly, to impose an exhaustion rule in these circumstances would turn the commercial law and commercial expectations on their head by creating an unintended class of third party beneficiaries who are effectively granted royalty-free licenses. Petitioners' proposed exhaustion rule, in turn, deprives a patentee of its rights whether or not the purchaser had notice of restrictions on its use of the patented component.

Unless the terms of the licensing agreement between Intel and respondent prohibiting any use of the patented systems and methods with non-Intel components are treated as complete surplusage, they necessarily prevented Intel from conveying to any of its purchasers a right to use the patented systems and methods as they did, and equally prevented petitioners from obtaining such a right. Petitioners purchased the patented systems and methods and combined them with non-Intel products with notice of this restriction. Presumably the price they paid for the patented systems and methods was correspondingly reduced because of their awareness of the restriction, just as the price that Intel paid respondent presumably reflected the restrictions that accompanied Intel's license. Yet rather than negotiate an appropriate license with respondent, petitioners enjoyed an unearned windfall – they bought a limited right, and treated it as if it were unlimited in character. Under these circumstances, the patent laws permit respondent to police its

patent rights by obtaining an appropriate remedy for infringement.

CONCLUSION

For the foregoing reasons, the judgment of the court of appeals should be affirmed.

Dated: December 9, 2007

Respectfully submitted,

Lawrence Rosenthal
(Counsel of Record)
Chapman University School of Law
One University Drive
Orange, California 92866
(714) 628–2650

Jerold B. Schnayer
Steven E. Feldman
Leonard Friedman
Sherry L. Rollo
WELSH & KATZ, LTD.
120 South Riverside Plaza
22nd Floor
Chicago, Illinois 60606
(312) 655–1500

Counsel for *Amicus Curiae*

56538 K

PCP
37

No. 06-937

IN THE
Supreme Court of the United States

QUANTA COMPUTER, INC., QUANTA COMPUTER USA, INC., Q-LITY COMPUTER, INC.,

Petitioners,

v.

LG ELECTRONICS, INC.,

Respondent.

ON WRIT OF CERTIORARI TO THE UNITED STATES COURT OF APPEALS FOR THE FEDERAL CIRCUIT

BRIEF OF QUALCOMM INCORPORATED AS *AMICUS CURIAE* IN SUPPORT OF RESPONDENT

MICHAEL D. HARTOGS
QUALCOMM INC.
5775 Morehouse Drive
San Diego, CA 92121
(858) 587-1121

RICHARD W. CLARY
Counsel of Record
CRAVATH, SWAINE & MOORE LLP
825 Eighth Avenue
New York, NY 10019-7475
(212) 474-1000

December 10, 2007

BEST AVAILABLE COPY

TABLE OF CONTENTS

Page

TABLE OF AUTHORITIES iii

INTEREST OF *AMICUS* 1

STATEMENT 2

SUMMARY OF ARGUMENT 10

ARGUMENT 11

I. PATENT LAW HAS LONG PERMITTED PATENT OWNERS TO ENTER INTO RESTRICTED, CONDITIONAL LICENSES THAT GRANT ONLY LIMITED AUTHORITY WITHOUT EXHAUSTING ALL RIGHTS IN THE LICENSED PATENTS. 11

II. AS A POLICY MATTER, PATENT OWNERS SHOULD BE PERMITTED TO GRANT RESTRICTED, CONDITIONAL AUTHORITY TO PARTICIPANTS AT VARIOUS STAGES IN THE PRODUCTION PROCESS. 20

A. Requiring Patent Owners to License Only the First Party in the Production Chain, as Petitioners Suggest, Would Severely Harm High Technology Industries and Consumers. 20

Page

B. Any Rule that Forces Patent Owners to License Only One Level in the Production Chain Is Unworkable.....27

CONCLUSION 29

TABLE OF AUTHORITIES

Cases

Adams v. Burke, 84 U.S. (17 Wall.) 453 (1873) 13, 17

Akzo N.V. v. U.S. Int'l Trade Comm'n, 808 F.2d 1471 (Fed. Cir. 1986)..... 16

B. Braun Medical, Inc. v. Abbott Labs., 124 F.3d 1419 (Fed. Cir. 1997)..... 13, 16, 17, 24

Bloomer v. McQuewan, 55 U.S. (14 How.) 539 (1852) 14

Gen. Talking Pictures Corp. v. W. Elec. Co., 305 U.S. 124 (1938)..... 8, 14, 15

Hobbie v. Jenison, 149 U.S. 355 (1893)..... 13, 18

Keeler v. Standard Folding Bed Co., 157 U.S. 659 (1895) 13, 17

LG Elecs., Inc. v. Asustek Computer, Inc., 248 F. Supp. 2d 912 (N.D. Cal. 2003) 18

LG Elecs., Inc. v. Bizcom Elecs., Inc., 453 F.3d 1364 (Fed. Cir. 2006)..... 18, 19

Mallinckrodt, Inc. v. Medipart, Inc., 976 F.2d 700 (Fed. Cir. 1992)..... 14

Mitchell v. Hawley, 83 U.S. (16 Wall.) 544 (1872) .....*passim*

Page(s)

Motion Picture Patents Co. v. Universal Film Mfg. Co., 243 U.S. 502 (1917) 12

Rubber Co. v. Goodyear, 76 U.S. (9 Wall.) 788 (1869) 15

United States v. Gen. Elec. Co., 272 U.S. 476 (1926) 14

United States v. Masonite Corp., 316 U.S. 265 (1942) 13

United States v. Univis Lens Co., 316 U.S. 241 (1942) 13, 18

Statutes

17 U.S.C. § 109 (2001) 12

35 U.S.C. § 154 (2001) 12

35 U.S.C. § 271 (2001) 12, 28

Other Authorities

Herbert Hovenkamp, Mark D. Janis & Mark A. Lemley, IP and Antitrust: An Analysis of Antitrust Principles Applied to Intellectual Property Law (Supp. 2007) 16

Jay Dratler, Jr., Licensing of Intellectual Property (2005) 15, 16

Page(s)

Roger M. Milgrim, Milgrim on Licensing (2007) 14

U.S. Dep't of Justice and Fed. Trade Comm'n, Antitrust Guidelines for Licensing of Intellectual Property (April 13, 1995), *available at* http://www.usdoj.gov/atr/public/guidelines/ipguide.pdf 16

THIS PAGE INTENTIONALLY LEFT BLANK

INTEREST OF *AMICUS*[1]

As a pioneer and leading innovator in the field of wireless communications whose businesses rely significantly on patent licensing and integrated circuit chip sales, QUALCOMM Incorporated ("Qualcomm") has a strong interest in the Court's interpretation of patent law. Non-trivial changes to the controlling interpretation of United States patent law have the potential to affect significantly and fundamentally the foundations of Qualcomm's businesses (and those of other high technology companies).

As is typical in high technology industries, patent licenses between major companies in the wireless industry are almost always granted as to patent portfolios or substantial portions of patent portfolios, as opposed to individual patents, regardless of the products produced by the licensee. Because a great number of companies have extensive patent portfolios, it would be cumbersome to identify all the specific patents required for a particular licensee's product(s), and the licensee would want assurances that all the patents it needs have been included in the license. Thus, it is typically the practice of Qualcomm and other participants in the wireless industry to grant licenses to all or a

---

[1] The parties have consented to the filing of this brief. No counsel for a party authored this brief in whole or in part, and no counsel or party made a monetary contribution intended to fund the preparation or submission of this brief. No person other than *amicus curiae* or its counsel made a monetary contribution to this brief's preparation or submission.

substantial portion of a patent portfolio, and, by the terms of the license agreement, to restrict the rights granted in connection with the portfolio to match the products that are produced by the licensee, and agree to compensation commensurate with the scope of the rights actually granted.

The various arrangements through which Qualcomm licenses its patents and earns revenue in the wireless industry are materially different from the arrangements currently before the Court as described in the publicly available record of this case. However, Petitioners and certain of the *amici* who support Petitioners urge the Court to paint with a very broad brush and to use this case improperly to expand the bounds of the exhaustion doctrine in a way that potentially would render Qualcomm and other patent owners unable to receive royalties in an amount commensurate to the significant economic value of their innovations by efficiently dividing and restricting rights granted at different stages in the chain of production.

STATEMENT

1. Qualcomm was co-founded in 1985 by its current Chairman Dr. Irwin Jacobs, who is a recipient of the National Medal of Technology, the highest honor awarded by the President of the United States to America's leading innovators. From shortly after its founding, Qualcomm has pioneered and developed the application of code division

multiple access ("CDMA"[2]) technology in the field of commercial cellular telephone communications. Hardly an overnight success, it took 16 years and over $5 billion in R&D and other strategic investments before Qualcomm's revenues caught up with its expenditures in 2001. Qualcomm has spent billions of dollars more since then on R&D focused on advancing wireless technologies.

Prior to Qualcomm's development of CDMA as a commercial technology, spread spectrum technologies (of which CDMA is one type) were studied by the military and other non-commercial interests. CDMA was also studied by a number of U.S. and foreign companies but rejected by them as a viable commercial technology due to a number of seemingly insurmountable technical hurdles. Then, in 1989, the U.S.-based Telecommunications Industry Association ("TIA") endorsed a cellular communications technology called time division multiple access ("TDMA"), a digital communications technique not based on CDMA that suffers from spectral limitations. By 1990, most of the cellular communications industry worldwide had also adopted various implementations of TDMA for second generation ("2G") cellular systems.

However, because Qualcomm believed CDMA to be technologically superior to TDMA, to the disbelief of the industry, Qualcomm undertook great risk and spent considerable sums of money to develop,

---

[2] There exist various versions or so-called flavors of CDMA such as CDMA2000 and WCDMA. This brief will refer to the flavors of CDMA, collectively, as "CDMA".

standardize, promote the adoption of and gain the carriers' (such as Sprint and the predecessors of Verizon Wireless) acceptance of CDMA. Qualcomm was, for all practical purposes, alone in its early efforts, and so it was necessary for Qualcomm to produce all products required to demonstrate that CDMA could be the basis for a commercially viable system. This included CDMA chips, CDMA handsets and CDMA infrastructure equipment (e.g., the equipment associated with cell towers, called "base stations"). Qualcomm first produced such products for use in laboratories, then on a small scale suitable for presentations to industry groups, then throughout San Diego, where Qualcomm is headquartered, and eventually on a wide scale. Notwithstanding severe industry skepticism, Qualcomm ultimately succeeded. In 1993, the TIA issued its first standard for 2G CDMA. Thereafter, major U.S. carriers conducted extensive studies of TDMA and CDMA and several eventually chose CDMA as their 2G cellular technology.

Largely because CDMA-based technologies offer data transmission rates and spectral efficiency far greater than those offered by TDMA-based technologies, CDMA-based solutions now have been adopted for *all* third generation ("3G") wireless telephony and broadband standards throughout the world. Qualcomm has continued to lead in the invention and development of enhancements to CDMA to support higher data rates.

2. Qualcomm possesses over six thousand U.S. patents and patent applications relating to CDMA and other technologies. By way of example, Qualcomm owns patents with claims covering

wireless baseband integrated circuits (chips), RF components (a term used to refer to radio frequency receiving components and radio frequency transmitting components), software, complete wireless handsets, infrastructure equipment, applications and complete wireless systems (i.e., the network of base stations, handsets, and that which makes them work together), and its patents include apparatus claims, method claims, system claims and combination claims that reach every level in a wireless system.

While Qualcomm is no longer in the business of producing CDMA handsets and infrastructure equipment, having divested those businesses to more mature manufacturing companies, its experience researching, developing and producing all of the types of products and components necessary for the commercial deployment of CDMA, coupled with its extensive efforts to research and develop CDMA technology generally, have led to its broad and deep pool of patents.

Qualcomm has striven to promote the broad-based licensing of its patent portfolio, not merely to generate licensing revenues for Qualcomm, but also because broad access to Qualcomm's intellectual property has enabled innovation by many other companies, the rapid growth of CDMA technology, and a vibrant and competitive wireless industry, all to the benefit of consumers. Qualcomm is a member of many standards setting organizations, which typically request that a member commit to license its patents that are actually essential to a standard on terms that are Fair, Reasonable and Non-Discriminatory ("FRAND"). Such patents are

sometimes referred to as "technically necessary" to implement a particular standard. Qualcomm has offered licenses to its portfolio of technically necessary patents on FRAND terms to entities desiring such a license to produce products that implement a given standard. Qualcomm also has offered licenses that cover essentially its entire portfolio of patents (including patents that are not technically necessary to implement a standard, but nonetheless may be desirable to utilize). Qualcomm has entered into over 200 patent license agreements covering all or substantial portions of its patent portfolio. Indeed, both Petitioners and Respondent are Qualcomm licensees. These portfolio licenses have enabled numerous entities to manufacture and sell a wide variety of CDMA components, products and combinations thereof, including wireless chips and handsets.

In addition, Qualcomm is, itself, a licensee under numerous patent portfolios owned by other companies. Like many innovators, Qualcomm is rewarded for its patented inventions in several ways, including by receipt of cross-licenses to extensive and valuable patent portfolios (and the "patent peace" that comes from such cross-licenses), by receipt of royalty payments, and by profits from sales of components and products that practice its own patents and patents licensed from other companies.

3. Qualcomm's primary sources of revenue are (1) sales of chips (called Application Specific Integrated Circuits or ASICs) used in cellular telephones, through its chip division, Qualcomm

CDMA Technologies ("QCT")[3]; (2) licensing its intellectual property to entities that produce (non-Qualcomm) chips, through its licensing division, Qualcomm Technology Licensing ("QTL"); and (3) licensing its intellectual property, through QTL, to entities that produce "Subscriber Units", a term that refers to, *inter alia*, wireless handsets.[4] Because an understanding of the many ways in which innovators in high technology industries achieve revenue (and patent peace) through licensing arrangements is important to the Court's analysis of the potential effects an overly expansive patent exhaustion doctrine may have on technology-based industries, Qualcomm lays out in some detail below relevant aspects of its own chip sales and chipset and handset licensing practices.

Qualcomm has provided chipmakers nontransferable, worldwide, nonexclusive, restricted licenses to its portfolio of technically necessary patents through licensing agreements called ASIC Patent License Agreements ("APLAs"). Chipmaker-licensees typically pay Qualcomm an up-front license fee and a running royalty (paid quarterly) that is an agreed upon percentage of the defined Net Selling Price of the chips produced by the licensee. As is common in the industry and has been found by the

---

[3] Both Petitioner and Respondent purchase ASICs from Qualcomm.

[4] Qualcomm also licenses its intellectual property to entities that produce other types of wireless communications products, including cellular telephone infrastructure equipment. For ease of presentation, this *amicus* brief will focus on chipsets and handsets.

Court plainly to be within the rights of patent holders, *see, e.g., Gen. Talking Pictures Corp. v. W. Elec. Co.*, 305 U.S. 124, 127 (1938) ("That a restrictive license is legal seems clear.") (citing *Mitchell v. Hawley*, 83 U.S. (16 Wall.) 544 (1872)), the license that Qualcomm has granted in APLAs is limited in scope and conditioned upon the licensee acting within the bounds of its limited license. An APLA provides the chipmaker-licensee with a license to *make* (or have made) its own ASICs. An APLA also provides the chipmaker-licensee with a restricted license to *sell* ASICs, but only to handset makers that the APLA defines to be an "Authorized Purchaser" for incorporation into fully assembled handsets. Authorized Purchasers are those handset makers that themselves have a license from Qualcomm through their own Subscriber Unit License Agreement ("SULA") to make, use and sell fully assembled handsets that, in the absence of a SULA, would infringe Qualcomm's patents. Importantly, by their express terms, APLAs do *not* grant a license to the chipmaker to *use* the ASICs—i.e., licensed chipmakers may not themselves use or pass on to others the right to use the chipmaker's ASICs to make, operate or sell handsets or any other product. APLAs explicitly state that the rights to use the ASICs to make, operate or sell handsets are only conferred by licensing agreements between Qualcomm and Authorized Purchasers (i.e., by SULAs). APLAs also expressly state that the license granted is only for the limited scope laid out, that no other license is granted or implied and that if the chipmaker-licensee sells ASICs to entities that are not Authorized Purchasers, the licensee has materially breached the APLA, which gives

Qualcomm the right to terminate the agreement, including the license granted.

As previously mentioned, producers of chips that are licensed through APLAs are granted, *inter alia*, a license to sell such chips only to handset makers that have entered into a SULA with Qualcomm. The standard terms of the SULAs have granted handset makers a nontransferable, worldwide, nonexclusive, unrestricted license to Qualcomm's patents to *make* (and have made), import and *use* handsets, and to *sell* (and offer to sell) completed handsets. SULAs typically provide for an up-front licensing fee to be paid to Qualcomm, along with a running royalty (paid quarterly) that is set as a percentage of the Net Selling Price of the handsets sold. The broad license typically provided in Qualcomm's SULAs exhausts Qualcomm's patent rights when handset makers sell finished handsets to their customers—typically wireless carriers such as Verizon Wireless—and pay Qualcomm the royalties due under the SULA. Qualcomm has not sought to license its patents to or receive royalties from wireless carriers or end users.

Qualcomm is also in the business of developing and selling its own chips and software for wireless handsets. Qualcomm typically sells chips only to those handset manufacturers that are licensed to Qualcomm's patents under a SULA. Such chip sales are pursuant to Components Supply Agreements, in which handset makers agree to pay Qualcomm an agreed upon price for the chips sold by Qualcomm. Components Supply Agreements provide that the buyer-handset makers may only incorporate the chips purchased from Qualcomm into fully assembled handsets that are the subject of the SULA

between Qualcomm and the handset maker. The sale of Qualcomm chips pursuant to Components Supply Agreements does not provide the buyer-handset makers any license to Qualcomm's patents, and Components Supply Agreements expressly state that no patent license, express or implied, is granted by the sale of the chips or the Components Supply Agreement. Rather, all patent licensing is covered by the SULA. Components Supply Agreements contain a representation and warranty by the buyer-handset maker that the chips purchased pursuant to the Components Supply Agreement will be used solely to develop and manufacture handsets for sale subject to and in accordance with the SULA between Qualcomm and the buyer-handset maker.

SUMMARY OF ARGUMENT

High technology industries, such as the wireless communications industry, frequently involve manufacturing in a multi-step chain of production, which results in various companies owning large portfolios of multifaceted, interrelated patents. Members of these industries accordingly have negotiated licensing agreements under which patent owners license their patents to a diverse array of companies, each with substantially differing licensing needs, at various points in the production chain. Critical to the complex structure of patent licensing in these industries is the well established rule that a patent owner has the flexibility, as a matter of law, to license different aspects of its bundle of make, use and sell rights separately without exhausting the whole of the patent owner's rights, and may grant restricted, conditional licenses that authorize the licensee to practice only those

patent rights that are necessary to accomplish that particular licensee's intended purpose.

Petitioners, as well as their *amici*, urge the Court to disregard industry custom and economically efficient practices, as well as over one hundred years of Court precedents, and, instead, create an expanded formulation of the exhaustion doctrine. Petitioners suggest that patent owners be denied the flexibility of the patent system and instead be limited to granting licenses and collecting royalties only once, at the first step in the production chain. Such an expanded formulation of the exhaustion doctrine oversimplifies the Court's precedents, jeopardizes efficient allocations of risk and reward across the chain of production, and fails to recognize the realities of modern industry. The Court should reconfirm the exhaustion doctrine within the boundaries of its original formulation, and therefore affirm the Federal Circuit decision below.

ARGUMENT

I. PATENT LAW HAS LONG PERMITTED PATENT OWNERS TO ENTER INTO RESTRICTED, CONDITIONAL LICENSES THAT GRANT ONLY LIMITED AUTHORITY WITHOUT EXHAUSTING ALL RIGHTS IN THE LICENSED PATENTS.

The Patent Act grants patent holders "the right to exclude others from making, using, offering for sale, or selling the invention throughout the United States or importing the invention into the United States, and, if the invention is a process, . . . the

right to exclude others from using, offering for sale or selling throughout the United States, or importing into the United States, products made by that process". 35 U.S.C. § 154(a)(1) (2001). Congress has also prescribed that "whoever without authority makes, uses, offers to sell, or sells any patented invention, within the United States or imports into the United States any patented invention during the term of the patent therefor, infringes the patent." 35 U.S.C. § 271(a) (2001); *see also* 35 U.S.C. § 271(g) (2001).

Courts have created federal common law that holds that where a patent owner authorizes a complete, unconditional sale—by the patent owner itself or by a licensee—of a patented article, the patent owner's statutory rights to exclude are exhausted as to that article.[5] As the Court explained in *Mitchell*, in the context of a sale by a patent owner (rather than a patent licensee), "where the sale [of a patented product] is *absolute, and without any conditions*, the rule is well settled that the purchaser may continue to use the implement or machine purchased until it is worn out, or he may repair it or improve upon it as he pleases, in same manner as if dealing with property of any other kind." 83 U.S. at 548 (emphasis added); *see also Motion Picture Patents Co. v. Universal Film Mfg. Co.*, 243 U.S. 502, 516 (1917) ("[T]he right to vend is exhausted by a single, *unconditional* sale, the article sold being

---

[5] Patent exhaustion is exclusively a creation of the courts; the Patent Act does not provide for patent exhaustion. *Cf.* 17 U.S.C. § 109(a)(c) (2001) (providing for copyright exhaustion in the Copyright Act).

thereby carried outside the monopoly of the patent law and rendered free of every restriction which the vendor may attempt to put upon it.") (emphasis added). "The theory behind this rule is that in such a transaction, the patentee has bargained for, and received, an amount equal to the *full* value of the goods." *B. Braun Medical, Inc. v. Abbott Labs.*, 124 F.3d 1419, 1426 (Fed. Cir. 1997) (emphasis added) (citing *Adams v. Burke*, 84 U.S. (17 Wall.) 453, 456-57 (1873); *Keeler v. Standard Folding Bed Co.*, 157 U.S. 659, 663 (1895)); *see also United States v. Masonite Corp.*, 316 U.S. 265, 278 (1942) ("The test has been whether or not there has been such a disposition of the article that it may fairly be said that the patentee has received his reward for the use of that article."); *United States v. Univis Lens Co.*, 316 U.S. 241, 251 (1942) ("[W]hen the patentee has received his reward for the use of his invention by the sale of the article, . . . once that purpose is realized the patent law affords no basis for restraining the use and enjoyment of the thing sold."); *Hobbie v. Jenison*, 149 U.S. 355, 361-62 (1893) ("[H]aving in the act of sale received *all* the royalty or consideration which he claims for the use of his invention in that *particular* machine or instrument, it is open to the use of the purchaser, without further restriction on account of the monopoly of the patentee.") (emphasis added).

However, neither the Patent Act nor federal common law requires patent owners to grant absolute, unrestricted and unconditional authority as to all rights conferred by a patent. Instead, as even *amici* in support of Petitioners recognize, *see* Brief of *Amicus Curiae* Int'l Bus. Machs. in Support of Pet'rs

at 14-17 (Nov. 12, 2007) ("IBM *Amicus* Br."); Brief for the United States as *Amicus Curiae* Supporting Pet'rs at 15-18 (Nov. 13, 2007) ("United States *Amicus* Br."); *see also* Brief of the Biotechnology Industry Organization as *Amicus Curiae* in Support of Neither Party at 21-29 (Nov. 13, 2007); Brief *Amicus Curiae* of the American Seed Trade Association in Support of Neither Party at 16-21 (Nov. 13, 2007), it is well settled that each of the rights conferred by a patent is individually and separately protectable—a patent holder may grant "authority" via a license agreement to each right separately, and the grant of authority may be otherwise restricted or conditional. *See, e.g., Gen. Talking Pictures Corp.*, 305 U.S. at 127 ("The practice of granting licenses for a restricted use is an old one. So far as appears, its legality has never been questioned."); *id.* at 127 ("That a restrictive license is legal seems clear.") (citing generally, *Mitchell*, 83 U.S. (16 Wall.) 544); *United States v. Gen. Elec. Co.*, 272 U.S. 476, 490 (1926) ("The patentee may make and grant a license to another to make and use the patented articles but withhold his right to sell them."); *Mitchell*, 83 U.S. (16 Wall.) at 547, 548-49, 550 (approving license to make and use, but not to sell, patented machine and noting the importance to "keep in view the well-founded distinction between the grant [of] the right to make and vend the patented machine, and the grant of the right to use it") (citing *Bloomer v. McQuewan*, 55 U.S. (14 How.) 539, 549 (1852)); *see also Mallinckrodt, Inc. v. Medipart, Inc.*, 976 F.2d 700, 703 (Fed. Cir. 1992) ("This right to exclude [pursuant to 35 U.S.C. § 154] may be waived in whole or in part."); 1 Roger M. Milgrim, Milgrim on Licensing,

§ 2.27 at 2-60.6 (2007) ("The patentee's exclusive right to make, use, sell and import is divisible into, and as such exploitable (by grant of license or otherwise) for, each of those categories."); 1 Jay Dratler, Jr., Licensing of Intellectual Property, § 4.03[2] at 4-25 (2005) ("There is . . . no impediment to a patentee's charging one royalty for manufacture of a product, and another for its use by the manufacturer."); Brief for *Amici Curiae* Nokia Corp. and Nokia Inc. in Support of Pet'rs, 2007 WL 3407022, at *11 (Nov. 13, 2007) ("Nokia *Amicus* Br.") (acknowledging that the authority granted by a patentee to a licensee "may be limited to geographical areas, time periods, certain uses, or a combination thereof").

Similarly, a patent owner may grant authority (as to some or all rights conferred by the Patent Act) to utilize the teachings of a patent for one particular purpose, e.g., in connection with a particular component, and may withhold authority in connection with other purposes, e.g., in connection with a fully-assembled finished product. For example, it is well established that patent owners may restrict their grant of authority to a particular field of use. *See, e.g., Gen. Talking Pictures,* 305 U.S. at 127 (upholding a license that granted the licensee the right to sell the patented amplifiers for private use, but not for commercial use—a right that the patentee licensed to others in separate licensing agreements); *Rubber Co. v. Goodyear,* 76 U.S. (9 Wall.) 788, 799 (1869) (upholding a grant of the right to make and sell, but for use only in a certain geographical area and for the purpose of manufacturing India-rubber cloth); *see also, e.g.,*

1 Herbert Hovenkamp, Mark D. Janis & Mark A. Lemley, IP and Antitrust: An Analysis of Antitrust Principles Applied to Intellectual Property Law, § 3.3b5 at 3-30.2 (Supp. 2007) ("Cases following *General Talking Pictures* have consistently upheld field-of-use and other similar restrictions within the scope of the license against misuse challenges."); 2 Dratler, *supra*, § 7.04 at 7-35 ("Because of the[ ] evident commercial and procompetitive benefits, field-of-use restraints are among the most common restrictive practices in licensing."); U.S. Dep't of Justice and Fed. Trade Comm'n, Antitrust Guidelines for Licensing of Intellectual Property, § 2.3, at 5 (April 13, 1995), *available at* http://www.usdoj.gov/atr/public/guidelines/ipguide.pdf ("Field-of-use, territorial, and other limitations on intellectual property licenses may serve procompetitive ends by allowing the licensor to exploit its property as efficiently and effectively as possible.").

The Federal Circuit has been faithful to this Court's precedents, approving use restrictions under varied circumstances and holding that licenses that limit a licensee's rights to one purpose do not exhaust the patent for other purposes for which authority has not been granted. *See, e.g., B. Braun*, 124 F.3d at 1421, 1426 (explaining that post-sale use restrictions are examples of "express conditions accompanying the sale or license of a patented product [, which] are generally upheld" and that "th[e] exhaustion doctrine . . . does not apply to an expressly conditional sale or license"); *see also Akzo N.V. v. U.S. Int'l Trade Comm'n*, 808 F.2d 1471, 1488-89 (Fed. Cir. 1986) (upholding as not

anticompetitive a pricing scheme that charged different royalty amounts on the basis of specific, restricted end-uses for which the licensees intended to use the patented device).

The sale of a product that is manufactured and sold pursuant to restricted, conditional authority does not exhaust all rights conferred by the patent covering that product.[6] When a license agreement grants authority to the licensee to exercise only certain of the make/use/sell rights conferred by the Patent Act, or only grants authority that is restricted (to a particular field of use or otherwise), the patent owner has not "bargained for, and received, an amount equal to the *full* value" of the patent, *B. Braun*, 124 F.3d at 1426 (emphasis added) (citing *Adams*, 84 U.S. at 456-57; *Keeler*, 157 U.S. at 663). *See also Keeler*, 157 U.S. at 666-67 ("[N]o article can be unfettered from the claim of [the patent owner's] monopoly without paying its tribute."). In such arrangements, the patent owner presumably has not received compensation for the rights that have not been licensed.

For example, when a patent owner grants, via a license agreement, limited authority to a component manufacturer only to *make* certain components and *sell* those components, the patent owner cannot be

---

[6] Qualcomm agrees with the point made by Nokia in its *amicus* brief in support of Petitioners that mere cross-covenants not to sue for infringement do not amount to authority and are incapable of exhausting the patents that are the subject of such cross-covenants. *See* Nokia *Amicus* Br., 2007 WL 3407022, at *19-21.

said to have exhausted its right to receive compensation for *using* such components by combining them with other components to create a fully-assembled finished product. The sale of a component by an entity that has been granted authority only to *make* and *sell*—but not *use*—such components cannot confer upon its customer the unrestricted authority to *use* the components by combining them with other components to create a finished product, because the component manufacturer cannot grant greater rights than it possesses itself.[7] This is axiomatic under the patent laws. *See Mitchell*, 83 U.S. at 550 ("*Nemo dat quod*

---

[7] Respondent's discussion of the ability of patent owners to divide and grant sell and use rights separately from make rights, *see* Resp't Br. at 42-46, does not by implication preclude the possibility of granting make and sell rights separately from use rights. *See, e.g., id.* at 42 ("Holders of a patent, like holders of any property, can sell distinct sticks from their bundle of property interests without losing the remainder."). The cases cited by Respondent in which the patent owner was found no longer to control the right to use the article sold, *id.* at 43, stand for the principle that, in the absence of an agreement to the contrary, an *implied license* to use passes with a patented article sold pursuant to an authorized sale. *See, e.g., Univis*, 316 U.S. at 249 (finding that the sale of the blank, which had no use but to be finished into the patented lens, effected both a transfer of title and an implied license to use the blank by finishing it); *Hobbie*, 149 U.S. at 362 ("[In the articles at issue], when they were once lawfully made and sold, there was no restriction on their use to be implied, for the benefit of the patentee or his assignees or licensees."). Of course, an implied license can be expressly disclaimed by the patent owner, as both lower courts found was the case here. *See LG Elecs., Inc. v. Bizcom Elecs., Inc.*, 453 F.3d 1364, 1369 (Fed. Cir. 2006); *LG Elecs., Inc. v. Asustek Computer, Inc.*, 248 F. Supp. 2d 912, 918 (N.D. Cal. 2003).

non habet. . . . [N]o one can convey . . . any better title than he owns".). Similarly, the sale of a component by an entity that has been granted restricted authority to utilize the teachings of a patent in connection with only that particular component cannot confer upon the buyer broader authority with respect to other components or products in violation of that restriction.

Here, the Federal Circuit concluded that the license at issue (the full text of which is not available in the public record) was of "limited scope" and gave only "conditional" authority because it "expressly disclaim[ed]" the granting of rights to combine the licensed components with other, non-licensed parts to create patented systems in downstream production. *Bizcom*, 453 F.3d at 1370. The Court's precedents require "unconditional" authority to invoke patent exhaustion, *see, e.g.*, *Mitchell*, 83 U.S. at 547, for the reasons discussed *supra*.

The broad expansion of the exhaustion doctrine for which Petitioners argue would prevent a patent owner from granting restricted authority in exchange for correspondingly lower compensation without exhausting rights for which authority has not been granted and royalties have not been paid. For the reasons discussed *infra*, such a holding would prove disastrous as a matter of policy.

II. AS A POLICY MATTER, PATENT OWNERS SHOULD BE PERMITTED TO GRANT RESTRICTED, CONDITIONAL AUTHORITY TO PARTICIPANTS AT VARIOUS STAGES IN THE PRODUCTION PROCESS.

A. Requiring Patent Owners to License Only the First Party in the Production Chain, as Petitioners Suggest, Would Severely Harm High Technology Industries and Consumers.

Allowing patent owners and licensees who operate at various points in the production chain to enter into licensing agreements that grant restricted and conditional authority in return for royalties or other consideration that compensate patent owners only for the limited authority granted is consistent with the Court's precedents and makes for sound policy. In such arrangements, licensees are not forced to pay for authority that they do not need. The practice of granting portfolio-wide licenses that are restricted in scope—by, e.g., dividing and separately licensing the make/use/sell rights conferred by the patent grant, or granting authority in connection with only one particular product or field of use—is critical in modern high technology industries, where industry players possess thousands of patents with tens of thousands of claims. In such industries, it is common for a single entity to possess patents that, collectively, cover all or most aspects of the technology used in the industry, including components and products created at each step of the production chain. For example, a single entity might possess patents that cover the

component apparatus, other patents that cover a system and method by which various components in the finished product interact, and other patents that cover the finished product apparatus.[8] If, as Petitioners suggest, patent exhaustion were to be redefined such that royalties in connection with patents that are infringed by the finished product could only be collected at the very first step of production, licensors such as Qualcomm effectively would be forced to license their patents only to chipmakers (and therefore receive royalties only from chipmakers). *See* Pet'rs Br. at 15 ("[Petitioners' view of the exhaustion] rule minimizes transaction costs by forcing the patent owner to exact the full value of its patent rights in one negotiation with the first purchaser, which can then share the burden with the rest of the distribution chain by charging a higher price."), 49 (suggesting that under the "traditional exhaustion rule" the patent owner "charg[es] the entire amount to the first party in the chain and rel[ies] on it to pass the cost along in the form of higher prices").[9] For the reasons discussed *infra*, in such a scenario, innovators and component

---

[8] In the wireless industry, it is also common for an entity to possess one or more patents, each of which includes a claim that covers a component apparatus, and another claim that covers a system and method by which various components in the finished product interact.

[9] While the majority of Petitioners' brief argues that patent owners should be forced to grant authority only to the very first level in the production chain, *see, e.g.*, Pet'rs Br. at 15, 49, the Petitioners at the end of their brief inconsistently suggest that Respondent could have licensed solely Petitioners or split its royalties between Intel and Petitioners, *id.* at 51.

makers could be significantly harmed, while manufacturers of finished products—like Petitioners—could receive a windfall.

In an effort to support the broad expansion for which they argue, Petitioners present policy and economic arguments that contemplate their redefined exhaustion doctrine's effect upon an oversimplified description of a technology industry. However, Petitioners ignore the economic efficiencies that derive from spreading the financial obligations of patent licensing across the production chain, such that all parties benefiting from the license bear a share of the financial burden proportional to the benefits they themselves derive.

It is the details of modern high technology industries that best illustrate the effects of a rule that would force patent owners to grant authority only to "the first party in the chain", Pet'rs Br. at 15. For example, in the wireless communications industry, some low-end handsets that cost less than $100 at wholesale may use the same chip used by some high-end handsets that cost as much as $400. While the chip used in each handset might have a wide array of capabilities, low-end handsets typically only make use of basic voice functionality, while high-end handsets typically also make use of other functionalities on which the licensed patent portfolio reads, such as high-speed data transfer which makes Internet browsing and video viewing possible. If patent exhaustion were to be redefined such that royalties in connection with many patents that read directly on handsets could only be collected from chipmakers as the first step in the production chain, the royalty received by patent owners such as

Qualcomm would necessarily be a function of the price of the *chip*, not the handset. As a result, the royalty charged would either overburden the low-end handsets (and the consumers who purchase them) or would insufficiently compensate the patent owner for the actual benefits conferred by the patented technologies in the high-end handsets. Overburdening low-end handsets by charging royalties for chip functionality not actually used by those handsets would render such low-end handsets less profitable or even unprofitable, potentially reducing or eliminating their presence in the market. The other alternative—insufficiently compensating innovators for the actual research and development required to produce cutting edge technologies commonly utilized in today's high-end handsets—would provide a windfall to makers of high-end handsets, slow the introduction of new technologies into the industry, and frustrate the goals of the Patent Act.

Petitioners' desired change in the law will also have the adverse effect of increasing the costs for firms seeking to enter component manufacturing. As discussed *supra*, in the wireless industry, both handset makers and chipmakers commonly pay licensing fees in the form of an up-front license fee and a running royalty that is a percentage of the selling price of the product sold, or some combination of the two. Currently, entities that manufacture and sell components, but do not manufacture finished products, are free to seek a license that grants limited authority only to make and sell the components (and not to use the components by incorporating them into the finished product).

Because the total license fees paid in such arrangements logically would be, and in practice commonly are, lower than the total license fees that would be paid if the component manufacturer were forced to obtain an unrestricted and unconditional license, *see B. Braun*, 124 F.3d at 1426 (regarding "an expressly conditional sale or license . . . it is more reasonable to infer that the parties negotiated a price that reflects only the value of the 'use' rights conferred by the patentee"), the cost of manufacturing and selling such components is set at a lower level than would be true under Petitioners' proposal.

Patent owners are more likely to be compensated for the full value of their patents in arrangements that allow for the collection of partial royalties from different points in the production chain. It is unlikely that a component manufacturer who does not incorporate the component into the finished product, and does not earn revenue on the finished product, will be willing to fully compensate the patent owner for that right. However, it *is* likely that (1) the component manufacturer will fully compensate the patent owner for the right to make and sell such components, and (2) the producer of the finished product will fully compensate the patent owner for the right to use the component by incorporating it into the finished product and for the unrestricted rights to then make, use and sell the fully assembled, finished product. Therefore, owners of patents with multiple claims addressed to different components, combinations and/or methods, as well as owners of robust portfolios of patents, are more likely to be compensated for the full value of

such patents or such portfolios—and therefore be motivated to invest intensively in innovating—by granting separate, restricted licenses to entities at the different stages of the production chain.

A simple practical illustration demonstrates the difficulty that patent owners will have being fully compensated under the changed exhaustion doctrine that Petitioners desire. In the wireless industry, running royalties are typically calculated as a percentage of the wholesale price for the particular component or product (e.g., chip or handset) for which the licensing agreement grants authority. The wholesale price of wireless chips tends to fall in the range of $7-$20 per chip, and the majority of chips tend to be priced in the lower end of that range. Royalty rates applied to chips tend to fall in the range of a single-digit percentage. Assuming, for illustrative purposes, a chip price of $10 and a royalty rate of 5%, each chip sold by a chipmaker-licensee to an authorized handset maker would yield $0.50 in royalties to the patent owner. The wholesale price of handsets (i.e., handsets sold from handset makers to wireless carriers) tends to fall in the range of $80-$400 per handset. Most handsets sold tend to be priced in the lower end of that range. Royalty rates applied to handsets tend also to fall in the range of single-digit percentages. Assuming, for illustrative purposes, a handset price of $150 and a royalty rate of 5%, each handset sold by a handset maker-licensee would yield $7.50 in royalties to the patent owner. In such an illustrative scenario, if a patent owner were forced to recoup from chipmakers alone the full value of its patents that cover the handset in which the chip is used, the patentee

would have to charge chipmakers an *additional* royalty at a rate of 75%, for a total royalty burden on chipmakers of 80% of the selling price of the chip, to recover the same $8 in total royalties. Furthermore, as previously mentioned, both handset makers and chipmakers often pay an up-front license fee. If the patent owner was forced to recoup the full value of its patents solely from chipmakers, it would be forced to charge chipmakers alone the up-front license fees that currently are divided between handset makers and chipmakers.

As a matter of economic theory, of course, a financially sound chipmaker confident that it ultimately can pass through those total license fees to its customers might be willing to agree to license fees that represent such a substantial percentage of what otherwise would have been the chip's selling price. However, in practice chipmakers are more likely to balk at such high license fees, for fear of not recovering the cost in their sales price to handset makers, in which event patent owners would not be adequately compensated to motivate the level of research and development that was in fact required to produce their innovations. This is especially true for new technologies in nascent industries, where the market success of the chips and the final products is more speculative. In such a scenario, the more likely result in practice is that the handset makers—who sit in the same level of the production chain as Petitioners—would receive a windfall at the expense of the patent owner innovators.

B. Any Rule that Forces Patent Owners to License Only One Level in the Production Chain Is Unworkable.

Certain *amici* in support of Petitioners seem to suggest that patent owners are not required to license only the first point in the production chain, as Petitioners primarily argue, but instead, that patent owners are permitted to license any one level—but only one level—of the production chain. *See, e.g.*, IBM *Amicus* Br. 9, 24, 31-32; Nokia *Amicus* Br., 2007 WL 3407022, at *2, *20, *23. However, nothing in the Patent Act suggests such a requirement, and neither do the precedents of this Court or the Federal Circuit. *See supra* pp. 13-19. The Court should not now create federal common law that compels such a requirement, which would be unjustified and economically unsound.

As a practical matter, such a requirement would be unworkable because it ignores the existence of patents at each step in the chain of production. Qualcomm's own businesses demonstrate the problem with the "license only one level" proposal. Qualcomm makes and sells its own chipsets, which not only embody some of Qualcomm's patented innovations, but may also practice patents of other companies engaged in the wireless industry. Thus, it is desirable for Qualcomm to be able to enter into portfolio-wide cross-licenses at the chip level, to ensure its unobstructed path to market free from the threat of lengthy and expensive patent litigation. Other chipmakers similarly want "patent peace", and cross-licensing is quite common in the industry. However, under the "license only one level" proposal by some of Petitioners' *amici*, the cost of obtaining

such patent peace through portfolio-wide cross-licenses at the chip level would be exhaustion of patent rights, such that the next step in the chain of production—handset makers—would be able to use those patents free of charge. Thus, all of the problems with Petitioners' "first level of production" proposal, discussed in Part II.A *supra*, again become implicated. And it is simply impractical for a new rule of law to be predicated on the assumption that companies engaged only in an intermediate stage of production will be willing to forego the ability to ensure patent peace through their own licenses or cross-licenses at their own level of production.

Petitioners' broad expansion of the exhaustion doctrine—whether it be the "first level of production" formulation or the "only one level of production" formulation—is inadequate to address the needs of modern industry. Such an expansion would overturn a large body of precedents on which entire industries have relied in structuring their licensing and sales agreements and in arranging their chains of production. Congress, too, has recognized that patent owners may receive revenue on a patent from entities that operate on multiple levels of a chain of production. *See* 35 U.S.C. § 271(d) (2001) ("No patent owner otherwise entitled to relief for infringement . . . shall be denied relief or deemed guilty of misuse . . . by reason of his having done one or more of the following: (1) derived revenue from acts which if performed by another without his consent would constitute contributory infringement of the patent; (2) licensed or authorized another to perform acts which if performed without his consent would constitute contributory infringement of the patent".)

Neither Court precedent nor the Patent Act provides any basis on which broadly to expand the doctrine of patent exhaustion as Petitioners desire.

CONCLUSION

For the foregoing reasons, the Court should sustain the decision of the Federal Circuit.

December 10, 2007

Respectfully submitted,

MICHAEL D. HARTOGS
QUALCOMM INC.
5775 Morehouse Drive
San Diego, CA 92121
(858) 587-1121

RICHARD W. CLARY
Counsel of Record
CRAVATH, SWAINE & MOORE LLP
825 Eighth Avenue
New York, NY 10019-7475
(212) 474-1000

S1530 C
40pgs

27

No. 06-937

IN THE
Supreme Court of the United States

QUANTA COMPUTER, INC., ET AL.,
Petitioners,

v.

LG ELECTRONICS, INC.,
Respondent.

On Writ of Certiorari to the United States Court of Appeals for the Federal Circuit

BRIEF OF REMBRANDT IP MANAGEMENT, LLC AS *AMICUS CURIAE* IN SUPPORT OF RESPONDENT

AARON M. PANNER
Counsel of Record
KELLOGG, HUBER, HANSEN,
TODD, EVANS & FIGEL, P.L.L.C.
1615 M Street, N.W.
Suite 400
Washington, D.C. 20036
(202) 326-7900
Counsel for Amicus
Rembrandt IP Management, LLC

December 10, 2007

BEST AVAILABLE COPY

TABLE OF CONTENTS

Page

TABLE OF AUTHORITIES iii

INTEREST OF *AMICUS CURIAE* 1

STATEMENT 2

SUMMARY OF ARGUMENT 4

ARGUMENT 7

I. THE PATENT STATUTE AND THIS COURT'S PRECEDENTS PERMIT AUTHORIZED SALES SUBJECT TO CONDITIONS ON USE 7

A. Because Patent Rights Are Distinct from "Patented Articles," Claims that Patent Exhaustion Reflects "Inherent Limits" on the Patent Grant Are Confused and Circular 7

B. This Court's Precedents Are Inconsistent with an Inflexible Rule of Patent Exhaustion on Authorized Sale 10

II. ALLOWING PARTIES TO CONTRACT AROUND THE PRESUMPTION OF EXHAUSTION IS GOOD POLICY 20

A. Like Other License Restrictions, License Restrictions Accompanying Sales of Articles May Promote Efficient Exploitation of the Patented Invention 20

B. No Legitimate Policy Rationale Supports Petitioners' Exhaustion Rule 28

CONCLUSION 33

TABLE OF AUTHORITIES

Page

CASES

Adams v. Burke, 84 U.S. (17 Wall.) 453 (1873) 4, 13, 14, 16

Bloomer v. McQuewan, 55 U.S. (14 How.) 539 (1853) 10

Bonito Boats, Inc. v. Thunder Craft Boats, Inc., 489 U.S. 141 (1989) 28

Clune v. United States, 159 U.S. 590 (1895)..... 14

Continental T.V., Inc. v. GTE Sylvania Inc., 433 U.S. 36 (1977) 19

Henry v. A.B. Dick Co., 224 U.S. 1 (1912).....4, 9, 12, 13, 15, 22, 33

Hobbie v. Jennison, 149 U.S. 355 (1893)..... 4, 14

Keeler v. Standard Folding-Bed Co., 157 U.S. 659 (1895) 4, 14

Illinois Tool Works Inc. v. Independent Ink, Inc., 547 U.S. 28 (2006) 5, 18

Leegin Creative Leather Prods., Inc. v. PSKS, Inc., 127 S. Ct. 2705 (2007) 5, 18, 19, 26

Mallinckrodt, Inc. v. Medipart, Inc., 976 F.2d 700 (Fed. Cir. 1992).....1, 24, 28, 33

Mitchell v. Hawley, 83 U.S. (16 Wall.) 544 (1873) 4, 11, 12, 13, 15

Motion Picture Patents Co. v. Universal Film Mfg. Co., 243 U.S. 502 (1917).....4, 5, 13, 15, 16, 17, 18, 20, 23

Static Control Components, Inc. v. Lexmark Int'l, Inc., 487 F. Supp. 2d 830 (E.D. Ky. 2007) 25

Straus v. Victor Talking Machine Co., 243 U.S. 490 (1917) 13, 16, 17, 18

United States v. General Elec. Co., 272 U.S. 476 (1926) 16

United States v. Masonite Corp., 316 U.S. 265 (1942) 20

United States v. Univis Lens Co., 316 U.S. 241 (1942) 4, 5, 9, 16, 17, 18, 19, 20, 26

STATUTES AND RULES

Act of Nov. 19, 1988, Pub. L. No. 100-703, § 201, 102 Stat. 4674, 4676 19

Clayton Act, 15 U.S.C. § 12 *et seq.* 15

Patent Act (35 U.S.C.):

§ 101 7

§ 154(a)(1) 7

§ 261 10

§ 271(d)(5) 5, 17

Sup. Ct. R. 37.6 1

ADMINISTRATIVE MATERIALS

Antitrust Modernization Commission, *Report and Recommendations* (Apr. 2007), *available at* http://www.amc.gov/report_recommendation/amc_final_report.pdf 19

Federal Trade Comm'n, *To Promote Innovation: The Proper Balance of Competition and Patent Law and Policy* (Oct. 2003), *available at* http://www.ftc.gov/os/2003/10/innovationrpt.pdf 28-29

U.S. Dep't of Justice & Federal Trade Comm'n:

Antitrust Enforcement and Intellectual Property Rights: Promoting Innovation and Competition (Apr. 2007), *available at* http://www.usdoj.gov/atr/public/hearings/ip/222655.pdf 19, 22, 30

Antitrust Guidelines for the Licensing of Intellectual Property (Apr. 1995), *available at* http://www.usdoj.gov/atr/public/guidelines/0558.pdf 19, 22

OTHER MATERIALS

William F. Baxter, *Legal Restrictions on Exploitation of the Patent Monopoly: An Economic Analysis*, 76 Yale L.J. 267 (1966) 8

Robert H. Bork, *The Antitrust Paradox* (1978) 21

Ward S. Bowman, Jr., *Patent and Antitrust Law: A Legal and Economic Appraisal* (1973) 5, 6, 12, 18, 20, 21, 22, 23

Guido Calabresi & A. Douglas Melamed, *Property Rules, Liability Rules, and Inalienability: One View of the Cathedral*, 85 Harv. L. Rev. 1089 (1972) 10

6 Donald S. Chisum, *Chisum on Patents* (2005) 19

Ronald H. Coase, *The Nature of the Firm*, 4 Economica 386 (1937)..... 26

Frank H. Easterbrook, *Contract and Copyright*, 42 Hous. L. Rev. 953 (2005) 6, 25, 27, 28

Richard A. Epstein:

Notice and Freedom of Contract in the Law of Servitudes, 55 S. Cal. L. Rev. 1353 (1982) 25, 28, 31

"*ProCD v. Zeidenberg*: Do Doctrine and Function Mix?," *in Contract Stories* 94 (D. Baird ed., 2007).....6, 25, 28

Thomas Reed Powell, *The Nature of a Patent Right*, 17 Colum. L. Rev. 663 (1917).....8, 9, 16

Glen O. Robinson, *Personal Property Servitudes*, 71 U. Chi. L. Rev. 1449 (2004) 9, 27, 32

2 William C. Robinson, *The Law of Patents for Useful Inventions* (1890)..... 12

Richard H. Stern, *Post-Sale Patent Restrictions After* Mallinckrodt – *An Idea in Search of Definition*, 5 Alb. L.J. Sci. & Tech. 1 (1994).....24, 25

Willard K. Tom & Joshua A. Newberg, *Antitrust and Intellectual Property: From Separate Spheres to Unified Field*, 66 Antitrust L.J. 167 (1997)..... 21

INTEREST OF *AMICUS CURIAE*[1]

Rembrandt IP Management, LLC is in the business of "making a market" in patents, providing liquidity to inventors and patent owners. To do so, Rembrandt must enforce the patents it acquires against infringers, including through the negotiation of license agreements. Rembrandt's principals have dozens of years of experience with patent litigation, patent licensing, and technology, and have a strong interest in the development of clear rules that facilitate, rather than frustrate, voluntary arrangements governing patent rights. Patent law benefits from rules that respect parties' private ordering without imposition of inflexible restrictions on conveyance of intellectual property rights. There is no evidence that the rule of *Mallinckrodt, Inc. v. Medipart, Inc.*, 976 F.2d 700 (Fed. Cir. 1992), has, over the past 15 years, produced confusion or given rise to abuse. By upholding freedom of contract, the Court will contribute to efficiency and clarity in the patent system.

---

[1] Pursuant to Supreme Court Rule 37.6, counsel for *amicus* represents that it authored this brief in its entirety and that none of the parties or their counsel, nor any other person or entity other than *amicus* or its counsel, made a monetary contribution intended to fund the preparation or submission of this brief. All parties have consented to the filing of this brief, and letters reflecting their blanket consent to the filing of *amicus* briefs in this case are on file with the Clerk.

STATEMENT

Respondent granted *to Intel* a license under its patents to "make, use, [and] sell" certain products. *See* Pet'rs Br. 8. The parties' arrangement made clear that the license granted *to Intel* was not intended to grant *to Intel's customers* a right to combine Intel and non-Intel parts to practice Respondent's patents. Petitioners had actual notice of Intel's license and Respondent's intent to deny Intel the right to grant to Intel's customers a license.

The legal validity of such licensing arrangements is a matter of pressing concern to Rembrandt and other patent owners that support invention and innovation by helping to obtain fair value for intellectual property. Patent owners often encounter situations, as Rembrandt has, in which a manufacturer is infringing a patent – directly or indirectly – and selling a product at a price that does not reflect the value of the intellectual property. Purchasers of the product may likewise infringe, reaping large profits by exploiting intellectual property not paid for. The patent owner is entitled to seek a reasonable royalty from the purchasers; however, an effort to obtain it may prompt the manufacturer – perhaps under pressure as a result of indemnification obligations – to file a declaratory judgment action asserting its willingness to pay a reasonable royalty on the sales of the articles.

In such circumstances, the manufacturer should be able to obtain a license at a cost that reflects the rights granted. A license may authorize the manufacture and sale of the patented invention, but not the purchaser's use; or the license may authorize both the manufacture and sale of the patented invention and the invention's use by the purchaser.

In many cases, the revenues derived from the purchaser's use of the invention far exceed the cost of the manufactured item. That difference will be reflected in the price of the license. Failure to recognize this distinction would substantially impair the value of the patented invention and grant a windfall to downstream infringers. It must be possible for the patentee to license the manufacturer to make and to sell, without necessarily granting a right for purchasers to use.

In instances where a potential infringer (whether a prospective manufacturer or user) seeks a license in advance, the parties should be permitted to fashion any agreement that is suited to the economic circumstances. (Indeed, there is broad agreement that legal enforcement of restrictions on use of patented articles is critical to economic efficiency, innovation, and growth. *See, e.g.*, IBM Br. 32-34; ASTA Br. 4 (consequences of refusal to enforce restrictions after sale "would be devastating"); BIO Br. 10, 21-34.) In some instances, the most efficient arrangement will include a royalty based on the value to downstream users. In other cases, it will make sense to agree that the manufacturer is licensed to make and sell only to customers that have entered into their own licenses with the patentee – an arrangement that Petitioners concede would be lawful. *See* Pet'rs Br. 51. And in still other instances it may make sense to authorize the manufacturer to sell but without conveying any license to downstream purchasers to practice the patent, leaving it to purchasers and the patent holder to negotiate separately. These are just three alternatives among the many that will be fashioned by those with the best information – the parties to the negotiation.

SUMMARY OF ARGUMENT

I. A. Sale of a patented article is conceptually distinct from the grant of a license to practice the patent by using the article sold, as this Court has recognized. It is fully *consistent* with the characteristics of the rights granted by Congress that a patent holder may sell (or authorize sale of) a patented article while retaining rights to exclude certain uses. The claim that the exhaustion doctrine reflects "inherent limits" on the patent grant is wrong. *Absent legal restrictions*, patent rights are freely divisible.

B. This Court's precedents recognize that a patentee (or its licensee) may make an authorized sale while retaining the right to exclude one or more uses of the patented article. *See Mitchell v. Hawley*, 83 U.S. (16 Wall.) 544, 547 (1873); *see also Henry v. A.B. Dick Co.*, 224 U.S. 1 (1912).

The cases upon which Petitioners and supporting *amici* rely establish two propositions, both of which are fully consistent with the continued vitality of *Mitchell*. *First*, when a patentee makes (or authorizes) a sale without explicit restrictions on use, no such restriction will be implied. *See Keeler v. Standard Folding-Bed Co.*, 157 U.S. 659 (1895); *Hobbie v. Jennison*, 149 U.S. 355 (1893); *Adams v. Burke*, 84 U.S. (17 Wall.) 453 (1873). *Second*, when a patentee imposes a restriction that seeks unlawfully to extend the scope of the patent grant, that restriction will be disregarded. *See United States v. Univis Lens Co.*, 316 U.S. 241, 251 (1942); *Motion Picture Patents Co. v. Universal Film Mfg. Co.*, 243 U.S. 502 (1917). The Federal Circuit's decision follows both principles.

As Respondent shows, an expansion of exhaustion doctrine would be needed to find exhaustion here, and that makes no sense: both Congress and this

Court have eliminated legal restrictions on efficient contractual arrangements under both patent and antitrust law, reflecting the recognition that arrangements that were previously thought harmful are, in fact, often efficient or benign. *See* 35 U.S.C. § 271(d)(5); *Leegin Creative Leather Prods., Inc. v. PSKS, Inc.*, 127 S. Ct. 2705 (2007); *Illinois Tool Works Inc. v. Independent Ink, Inc.*, 547 U.S. 28 (2006). Those developments directly undermine the very decisions on which Petitioners principally rely, *Univis* and *Motion Picture Patents*, to restrict contracting freedom.

II. A. As a matter of policy, a prohibition on otherwise lawful restrictions on use after authorized sales would be misguided. Because invention and innovation are critical to economic growth, Congress, to stimulate inventive and innovative activity, has granted inventors a right to exclude others from using an invention for a period of time. The economic value of a patent is measured by the marketplace's choice of the patented invention over available alternatives. Economic analysis demonstrates that vertical arrangements dividing permissible uses of the invention do not generally allow a patentee to earn more than the economic value of the patent; such arrangements do not *extend* the scope of the patent, but do help to secure to inventors the full value of their inventions. *See* Ward S. Bowman, Jr., *Patent and Antitrust Law: A Legal and Economic Appraisal* (1973).

Exhaustion doctrine reflects a presumption that an authorized sale of a patented article conveys an unrestricted license to use the article. But allowing private parties to contract around such presumptions respects individual liberty and autonomy and

promotes efficient allocation of resources. *See id.*; Frank H. Easterbrook, *Contract and Copyright*, 42 Hous. L. Rev. 953 (2005); Richard A. Epstein, "*ProCD v. Zeidenberg*: Do Doctrine and Function Mix?," *in Contract Stories* 94 (D. Baird ed., 2007). Prohibiting (or complicating) such contracting-around leads to inefficiency and increased transaction costs.

B. The claim that an exhaustion *rule* – rather than an exhaustion *presumption* – is required to protect against abuses is empirically unsupported and unpersuasive. Many of these arguments are based on hostility to patent rights. Such hostility is not only contrary to the will of Congress but also offers no principled basis for adopting Petitioners' exhaustion rule, which would create arbitrary distinctions involving the role of the patent in a particular industry, the structure of the industry, or the organization of particular firms.

ARGUMENT

I. THE PATENT STATUTE AND THIS COURT'S PRECEDENTS PERMIT AUTHORIZED SALES SUBJECT TO CONDITIONS ON USE

Petitioners and supporting *amici* argue that patent law maintains a sharp distinction between conditions that a patentee may attempt to place on a title-transferring sale of a patented article – which are invalid – and conditions placed on a mere license to use – which are enforceable through the patent law. *See* Pet'rs Br. 28; U.S. Br. 15. This purely formalistic distinction makes no sense in any relevant policy terms and misreads this Court's precedents.

A. Because Patent Rights Are Distinct from "Patented Articles," Claims that Patent Exhaustion Reflects "Inherent Limits" on the Patent Grant Are Confused and Circular

1. The statute defines a patent as a right to exclude others from practicing a patented invention. *See* 35 U.S.C. § 154(a)(1). The patent is thus a right to prevent others from engaging in enumerated activities, not a claim to ownership of any thing. Furthermore, the patented "invention" itself is not a *tangible* thing but a "new and useful process, machine, manufacture, or composition of matter," *id.* § 101 – that is, a conception or idea (of a particular kind) that exists apart from any particular exemplification or embodiment.

The sale of an *article* thus does not, as a definitional matter, convey or otherwise surrender any patent rights except as such license is included, implicitly or explicitly, in the sale of the article. *See* U.S. Br. 9 (acknowledging that exhaustion depends on a theory of implied license). It is thus an error to

conflate the purchase of an *article* with the purchase of *rights to practice a patent*. One of Petitioners' *amici* argues that, when one "*buys* [a] patented invention," the "invention that he purchased 'becomes his private individual property.'" Gen-Probe Br. 13. This is wrong. The "patented invention" is the idea or conception, and it is not (and cannot be) sold. The sale of an article conveys title to the article. It is an analytically separate question whether the seller conveys a license to practice any particular patent.

As Thomas Reed Powell explained "with characteristic lucidity"[2] 90 years ago:

> When the patentee sells a patented machine, he does not sell his right to exclude others from the use of the invention. The purchaser . . . acquires title to the machine. This title passes by the law which governs the sale of chattels, the law of the state. This law permits one who by purchase becomes owner of a machine to use it in any way not forbidden by that law. But such right of use[] is in conflict with the right of the patentee to exclude others from all use of the invention.

Thomas Reed Powell, *The Nature of a Patent Right*, 17 Colum. L. Rev. 663, 666 (1917).

This does not mean that there is no patent exhaustion doctrine: when a patentee sells a patented machine without any conditions, "he must be assumed to consent that the right to use the machine shall be governed by the law of the state." *Id.* That is a sound *presumption*, reflecting the reality that, in

---

[2] William F. Baxter, *Legal Restrictions on Exploitation of the Patent Monopoly: An Economic Analysis*, 76 Yale L.J. 267, 276 (1966).

a typical case, "[t]he reward [the patentee] has demanded and received is for the article and the invention which it embodies and which his vendee is to practice upon it." *Univis*, 316 U.S. at 251. But, absent legal constraints, there is no reason that a patentee cannot sell an article – convey title – while retaining patent rights to exclude practice of the patent, by the purchaser or by anyone else, with the price reflecting any such conditions. *See* Powell, 17 Colum. L. Rev. at 666.

This Court has recognized "the distinction between the property right in the materials composing a patented machine, and the right to use for the purpose and in the manner pointed out by the patent." *A.B. Dick*, 224 U.S. at 24.[3] "The latter may be and often is the greater element of value, and the buyer may desire it only to apply to some or all of the uses included in the invention. *But the two things are separable rights.*" *Id.* (emphasis added).[4]

2. Petitioners argue that, "when a patented invention 'passes to the hands of the purchaser,' it 'passes outside' the scope of the patentee's rights,"

---

[3] As noted below, *see infra* p. 15, while *A.B. Dick*'s approval of a tying condition was overruled, its conceptual underpinnings have not been.

[4] For this reason, the suggestion that Petitioners' exhaustion rule gains support from the common-law distrust of servitudes on personal property, *see, e.g.*, Pet'rs Br. 46-47, is likewise incorrect. Such a servitude would arise if the owner of personal property sold it while purporting to retain some interest based on prior ownership. *See generally* Glen O. Robinson, *Personal Property Servitudes*, 71 U. Chi. L. Rev. 1449 (2004). The issue presented here is quite different, because the general power of a patentee to retain certain rights under a patent while surrendering others – for example, by granting restricted licenses – is unquestioned.

Pet'rs Br. 16 (quoting *Bloomer v. McQuewan*, 55 U.S. (14 How.) 539, 549 (1853)), a rule that supposedly "stems from *inherent limits* on the grant of the patent right," *id.* at 26 (internal quotation marks omitted, emphasis added). But any limitations on a patentee's ability to retain patent rights on sale of a patented article would reflect judicially imposed limitations on private arrangements regarding patent rights, *not* any restriction "inherent" in the statutory grant.

To the contrary, it is *consistent* with the nature of patent rights that they can be retained (in whole or in part) upon the sale of a patented article. The rights granted by Congress are protected as *property*, *see* 35 U.S.C. § 261; the defining characteristic of property rights is that they are subject to free-market exchange and parceling out. *See* Guido Calabresi & A. Douglas Melamed, *Property Rules, Liability Rules, and Inalienability: One View of the Cathedral*, 85 Harv. L. Rev. 1089, 1092 (1972). Petitioners seek to create, instead, a rule of inalienability – to assign a right to purchase a patented article free of conditions on use that *cannot be modified by agreement*. *See id.* at 1092-93. There is no justification for doing so.

B. This Court's Precedents Are Inconsistent with an Inflexible Rule of Patent Exhaustion on Authorized Sale

The primary argument of Petitioners and the government is that this Court's prior decisions mandate an inflexible exhaustion rule. That is incorrect.

1. This Court has recognized that a licensee may make an authorized sale of a patented article without "exhausting" the right to exclude the purchaser from some uses of the article, thus recognizing that

sale of a patented article is both distinct and divisible from the granting of an exhaustive patent license. *See also* IBM Br. 14 ("[T]he Court has . . . recognized, for over a century, an exception to exhaustion where there is an express agreement limiting the licensee's or purchaser's rights under a patent.").

In *Mitchell v. Hawley*, the patentee (Taylor) conveyed to a licensee (Bayley) the right, during the original patent term, to make and to use, and to license others to make and to use, a hat-making machine, the use of which was covered by Taylor's patent. The licensee "sold the machines," and also executed to the purchasers a license to use the machines, *limited to the original patent term*. 83 U.S. at 549. After the patent was extended and use continued after expiration of the original term, the patent owner sued the current owners of the machines for infringement. The defendants argued that "they are by law authorized to continue to use the four machines just the same under the extended letters-patent as they had the right to do under the original patent, when the purchase was made." *Id.* at 549-50.

The Court rejected that defense, holding that the original purchasers "never acquired the right to sell the machines and give their purchasers the right to use the same . . . beyond the term of the original patent." *Id.* at 550. There was no lack of authorization to sell the items, but only lack of authorization to give the extended-use right. *See id.* at 551 (original purchasers had no "power to sell a machine *so as to withdraw it indefinitely from the operation of the franchise secured by the patent*") (emphasis added). *Mitchell* thus makes clear that, so long as the terms of the conveyance are clear, a sale of an article need

not lead to surrender of all rights to exclude use of the article. *See also* Bowman at 143.

This understanding was confirmed by the Court in *A.B. Dick*, which reaffirmed the underlying principles:

> The question argued . . . was there, as here, that by a sale of the machines "they were taken out of the reach of the patent law altogether, and that as long as the machines themselves lasted, the owner could use them." For the patentee it was urged that "the right to make and use and to license others to use was expressly limited by apt words, showing clearly an intent that it should not survive the original term of the patent." This latter was the argument that prevailed.

224 U.S. at 22.

Petitioners now argue that *Mitchell* dealt with a "conditional sale," that is, where the seller does not part with title until the buyer performed a condition precedent. Pet'rs Br. 19. That assertion is unsupported and incorrect, contradicting not only the language of *Mitchell* but also Petitioners' own statements. *See, e.g.*, Cert. Pet. 10-11 (acknowledging that "defendants had *bought* patented machines" but that, "because the licensee had no title or authority *to grant any right to use the patent* beyond the original term, *purchasers* from him could not have acquired such a right") (emphases added); *see also A.B. Dick*, 224 U.S. at 21 ("The force and bearing of [*Mitchell*] cannot be escaped by suggesting that the court was referring to mere common-law contractual conditions, for the suit was to restrain infringement by the use of four machines which had been sold, *not leased*."); 2 William C. Robinson, *The Law of Patents for Useful Inventions* § 824, at 617-24 (1890) (recog-

nizing that, under *Mitchell*, a condition can prevent loss of patent rights on sale).[5] Moreover, if there were no authorized sale in *Mitchell*, the dissent in *A.B. Dick* surely would have mentioned that fact.

The attempt to distinguish *Mitchell* as limited to conditional sales also runs headlong into *Straus v. Victor Talking Machine Co.*, 243 U.S. 490 (1917), and Justice Holmes' dissent in *Motion Picture Patents*. *Straus did* involve a conditional sale, *see* 243 U.S. at 495, as Justice Holmes expressly noted, *see* 243 U.S. at 520-21, yet that did not save the license restrictions or prevent the court from concluding, given the absence of any *valid* restriction on the right to use, that the case "falls within the principles of Adams v. Burke." *Straus*, 243 U.S. at 501.

2. The cases on which Petitioners rely stand for two propositions. *First*, where a patentee sells an article free of explicit restrictions on use, or where a licensee is authorized to make a sale and no restriction is placed on the licensee's conveyance of patent rights, the patentee thereafter surrenders the right to exclude others from use or resale of the article – courts will not *imply* any restrictions on use or resale of a patented article after an authorized sale. *Second*, a patentee may not improperly expand the scope of patent rights by placing restrictions on use that are substantively unlawful, for example, because they would impose an unlawful restraint of trade.

a. *Adams v. Burke* involved the sale of a coffin lid by a licensee in the Boston area; the purchaser

---

[5] The government claims that *Mitchell* involved an unauthorized sale, *see* U.S. Br. 16-17, but it has no evidence for that characterization. There was no restriction on sale of the patented article; the restriction was on the nature of the license that could be granted to the purchaser.

transported the lid to Natick, and the assignee sued the purchaser for infringement. The license authorized manufacture, sale, and use of the lids only in the Boston area (not in Natick); the Court held that, because the *sale* had been made within the authorized territory, there was "no restriction on . . . *use* to be *implied* for the benefit of the patentee" where such a "limitation upon the right of use [was] not contemplated by the statute nor within the reason of the contract." 84 U.S. at 456-57 (second emphasis added). The case thus establishes the principle that an authorized sale conveys an unrestricted right to use *in the absence of any contrary agreement.*

This principle was applied in *Hobbie* and *Keeler*. In *Hobbie*, a licensee made a sale within its assigned territory, knowing the material would be used outside of that territory; the Court held that there was no infringement because "the defendant . . . had a right, under the patent, to make, use, and vend the patented article in the state of Michigan, and the article was lawfully made and sold there." 149 U.S. at 363. The Court noted, however, that a patentee has the power to "impos[e] conditions which will prevent any other licensee or assignee from being interfered with" but that "[t]here is no condition or restriction in the present case in the title of the defendant." *Id.* at 363-64. In *Keeler*, the facts were comparable; again, the Court had no occasion to consider "[w]hether a patentee may protect himself and his assignees by special contracts brought home to the purchasers." 157 U.S. at 666.[6]

---

[6] The Court did not limit its qualification to contracts *with* the purchasers but included contracts "brought home to" the purchasers – *i.e.*, of which purchasers are made aware. *Cf., e.g., Clune v. United States*, 159 U.S. 590, 592 (1895) (noting that

b. As noted above, a patentee's ability to reserve rights to exclude upon authorized sale of articles was affirmed by the Court in *A.B. Dick*. That case was, of course, held to be overruled in *Motion Picture Patents*, *see* 243 U.S. at 518, but the basis for the overruling was narrow – leaving untouched the principle that a patentee may continue to enforce use restrictions that are otherwise permissible. Instead, *Motion Picture Patents* rested on the holding that the license restriction – which required use of unpatented materials (films) acquired from the patentee – unlawfully expanded the scope of the patentee's rights beyond the specific patented mechanism. *See id.* at 512-13, 516. The Court derived additional support for its conclusion from the terms of the recently passed Clayton Act, which prohibits tying arrangements "where the effect of such [arrangement] . . . may be to substantially lessen competition or tend to create a monopoly in any line of commerce." *Id.* at 517 (internal quotation marks omitted).

As discussed below, the rationale of *Motion Picture Patents* has been disapproved by Congress and this Court. But the critical point is that its elaborate discussion of the scope of the patented invention – its supposed inapplicability to unpatented materials used with the patented machine – would have been unnecessary if, as Petitioners urge, *any* restriction on use after sale were prohibited. *Motion Picture Patents* stood for the proposition (now disapproved) that a tying restriction unlawfully expands the scope of a patent, but it did not even discuss *Mitchell* or the broader analysis in *A.B. Dick*, because it did not con-

---

"telegrams of this character, if identified and *brought home to* the defendants, were obviously circumstances tending to show [a] conspiracy") (emphasis added).

sider any restriction that would (as the Court understood the concept) fall within the patent grant.[7] *See United States v. General Elec. Co.*, 272 U.S. 476, 493 (1926) ("The overruling of the Dick Case was based on the ground that the grant of the patent was of the exclusive right to use the mechanism and produce the result with any appropriate material and that the materials or pictures upon which the machine was operated were no part of the patented machine, or of the combination which produced the patented result."); Powell, 17 Colum. L. Rev. at 685-86 ("It seems clear that . . . the reversal of the Dick case does not impugn the authority of the earlier decisions sustaining the validity of restrictions on time, place and purpose of use.") (footnote omitted).[8]

c. The best case for Petitioners is *Univis*, which employs broad language in holding that a restriction on resale prices charged by licensees was not made enforceable under the patent law if unlawful under the antitrust laws. *See* 316 U.S. at 249-52. But the case should not be read to resolve the question presented here because (1) it does not address *Mitchell*; (2) the Court was faced with a vertical price-fixing

---

[7] Likewise, *Straus* disapproved an arrangement that sought to condition a license on compliance with the patentee's resale price maintenance scheme. Finding that "th[e] plan of marketing . . . is, in substance, the one dealt with by this court in Dr. Miles Medical Co. v. John D. Park & Sons Co. 220 U.S. 373 [(1911)]," 243 U.S. at 498, the Court refused to give effect to the condition, bringing the case within the rule of *Adams*, *see id.* at 501.

[8] Powell's detailed discussion of *Motion Picture Patents* did not even perceive the case to articulate any exhaustion principle and (correctly) read the case as concerning solely the question whether a patentee could permissibly grant a license subject to a tying arrangement.

agreement that had already been held unlawful in *Straus* and other cases; and (3) the Court found that "the *entire consideration and compensation* for *both* [the articles sold and the license to practice the patent] is the purchase price paid by the finishing licensee to the Lens Company." *Id.* at 249-50 (emphases added). The Court understood that any restriction on retail prices was unrelated to securing additional reward to the patentee. The Court therefore did not consider a case in which a patentee agreed to accept reduced payment from a manufacturing licensee in exchange for a limited license after sale. In short, the result in *Univis* is fully consistent with the principle that patent exhaustion is simply an implied license that is subject to modification by *otherwise lawful* contracts.

3. The reliance on *Motion Picture Patents* and *Univis* – to achieve the *extension* of exhaustion doctrine needed to embrace this case – is all the more misplaced because the legal foundation on which those cases rest has been swept away by subsequent congressional enactments and decisions of this Court. *Motion Picture Patents* and *Univis* reflect hostility to vertical arrangements that were perceived to "extend" the exclusionary power of a patent. But modern patent and antitrust rules reflect the recognition that vertical agreements generally do not "extend" a monopoly and frequently promote efficiency.

First, the hostility to tying arrangements that underlay *Motion Picture Patents* has given way to the rule that tying is subject to judicial scrutiny only where the defendant has actual market power. Congress specifically established this rule in the patent context by enacting 35 U.S.C. § 271(d)(5), which provides that tying will not constitute patent misuse

unless "the patent owner has market power in the relevant market for the patent or patented product." As this Court recognized in *Illinois Tool*, that provision overruled the line of patent misuse cases that stemmed from *Motion Picture Patents*. *See* 547 U.S. at 38 ("[a]lthough *Motion Picture Patents Co.* simply narrowed the scope of possible patent infringement claims, it formed the basis for the Court's subsequent decisions creating a patent misuse defense"). And *Illinois Tool* ruled, in the antitrust context, that tying of unpatented products to patented articles generally raises no competitive concerns.

Second, the Court held in *Leegin* that resale price maintenance agreements are to be judged under the antitrust rule of reason. This means, as a practical matter, that such agreements are usually legal in cases where the relevant market actor lacks market power. *See Leegin*, 127 S. Ct. at 2720. That recognition eviscerates the policy rationale undergirding *Univis* and *Straus*.

Third, and more broadly, there has been a sea-change in judicial approaches to vertical agreements, which has led to substantial reform of patent misuse law and antitrust law. For more than half a century, courts viewed vertical integration and vertical contracts with deep suspicion. As Ward Bowman commented in 1973: "The courts, and particularly the Supreme Court, . . . have with increasing strictness contracted the scope of permissible patent use and expanded the definition of patent misuse. And this has paralleled increasingly stringent antitrust law relating to vertical contracts." Bowman at 240. In both areas, however – misuse and vertical restraints – Congress and the Court have eliminated limitations on potentially beneficial vertical agreements.

See, e.g., Act of Nov. 19, 1988, Pub. L. No. 100-703, § 201, 102 Stat. 4674, 4676; Antitrust Modernization Commission, *Report and Recommendations* 36-37 (Apr. 2007) ("During much of the twentieth century, the courts, antitrust enforcers, and antitrust practitioners viewed intellectual property with deep skepticism. . . . The influence of economic learning about the competitive benefits of intellectual property and the potential efficiencies of intellectual property licensing and other conduct reversed this trend."); U.S. Dep't of Justice & Federal Trade Comm'n, *Antitrust Guidelines for the Licensing of Intellectual Property* § 2.0, at 2 (Apr. 1995) ("1995 IP Licensing Guidelines") ("intellectual property licensing . . . is generally procompetitive"); *Continental T.V., Inc. v. GTE Sylvania Inc.*, 433 U.S. 36 (1977); *cf.* 6 Donald S. Chisum, *Chisum on Patents* § 19.04[3], at 19-453 (2005) ("[W]hat acts will be viewed as constituting misuse will shift with corresponding shifts in antitrust policy.").

The same considerations should lead the Court to cabin the over-broad dicta in *Univis*. The exhaustion rule that Petitioners advocate is a *per se* rule of unenforceability for vertical agreements to allocate patent rights when those agreements accompany an authorized sale. But, as this Court has recognized, *per se* prohibitions must be adopted with caution. *See Leegin*, 127 S. Ct. at 2713; U.S. Dep't of Justice & Federal Trade Comm'n, *Antitrust Enforcement and Intellectual Property Rights: Promoting Innovation and Competition* 88 (Apr. 2007) ("2007 Report") (noting, with regard to patent licensing practices, that "applying simple rules to broad classes of behavior can risk great inefficiency"). Because Petitioners' rule would deny legal effect to parties' preferred allo-

cation of patent rights, it could be justified only if there were no legitimate reason for such arrangements and if they almost always produced harmful results. That is not the case.

II. ALLOWING PARTIES TO CONTRACT AROUND THE PRESUMPTION OF EXHAUSTION IS GOOD POLICY

As even its proponents acknowledge, Petitioners' exhaustion rule would make the enforceability of private agreements to allocate patent rights depend on whether a particular restriction could be effected through a conditional license (presumptively permitted) or a conditional sale (prohibited). This makes no policy sense.

A. Like Other License Restrictions, License Restrictions Accompanying Sales of Articles May Promote Efficient Exploitation of the Patented Invention

1. Both *Univis* and *Motion Picture Patents* are products of a past attitude of judicial hostility to patent rights grounded in the perception that "patents are privileges *restrictive of a free economy*." *United States v. Masonite Corp.*, 316 U.S. 265, 280 (1942) (emphasis added).[9] That understanding of patent law was dismantled first by economists and legal scholars and then by government policymakers and the courts. As Yale Law Professor and economist Ward Bowman observed, patent law, like antitrust law, has as its "central economic goal . . . *to maximize wealth by producing what consumers want at the lowest cost*." Bowman at 1. Bowman's analysis – which has been praised as "so good and so definitive"

---

[9] This is a theme that is resuscitated by many of Petitioners' *amici*. *See, e.g.*, Dell Br. 3-4.

that it leaves "nothing more to say"[10] and which provided the intellectual underpinnings for the government's patent-related antitrust policy[11] – begins from the premise that the congressional decision to grant patent rights reflects its judgment that allowing patentees to reap the value of their invention will encourage an appropriate level of investment in innovation. *Id.* at 53. Investors will not provide the capital needed for testing, manufacturing, marketing, and distribution of new inventions unless they know that they have adequate patent protection.

The value of the right to exclude others from practicing the patent is measured by the competitive superiority of the patented invention over available substitutes. An arrangement involving patent rights is thus within a patent's scope when "the reward to the patentee comes from advantage ascribable to the patent rather than from another source not deserving of monopoly protection." *Id.* at 54.

Bowman concluded that "vertical contracts – which patentees make with licensees for the purpose of 'restricting' the use licensees may make of the patent under the terms of the license . . . [–] are not monopoly-extending." *Id.* at 55. Rather, such arrangements help the patent owner to realize the full value of the patent right granted by Congress. *Id.* at 55-56. His analysis shows that licensing restrictions

> can lead to resource allocation in which both the patentee and the community can be expected to

---

[10] Robert H. Bork, *The Antitrust Paradox* x (1978).

[11] *See* Willard K. Tom & Joshua A. Newberg, *Antitrust and Intellectual Property: From Separate Spheres to Unified Field*, 66 Antitrust L.J. 167, 173 (1997) (crediting Bowman with "profoundly influenc[ing] the perspective of the 1995 [IP Licensing] Guidelines").

> be richer, not poorer, than if these practices were proscribed. Imposing conditions on licensees, in the absence of collusion with competitors, predictably leads to results which compel a conclusion that the public interest would *not* be fostered by repressing rather than supporting a patentee's freedom to exploit by noncollusive means, in his self-interest.

Id. at 61-62.

This insight underlies the 1995 IP Licensing Guidelines, which note that "[f]ield-of-use, territorial, and other limitations on intellectual property licenses may serve *procompetitive* ends by allowing the licensor to exploit its property as efficiently and effectively as possible." § 2.3, at 5 (emphasis added); *see also* 2007 Report at 87 ("[t]he vast majority of licensing restraints can be expected to contribute to an efficiency-enhancing integration of economic activity") (internal quotation marks omitted).

2. The considerations that have led antitrust enforcement authorities to conclude that licensing restrictions are "generally procompetitive," 2007 Report at 87, likewise favor giving effect to licensing restrictions that accompany sales of patented articles. Like any other license restriction, a license restriction on sale is simply "an explicit refusal of a patentee to permit particular use in time or place" that is presumptively efficiency-enhancing. Bowman at 146. There is "no convincing economic rationale for denying such rights to patentees." *Id.*

To the contrary, the *A.B. Dick* case provides a good illustration for why use restrictions accompanying

a sale can be economically useful.[12] The defendant manufactured patented mimeograph machines; the value of the patented invention to individual purchasers would naturally depend in part on how intensively the purchaser used the machine. By conditioning a license to use the machine on purchase of ink from the patentee, the patentee was able to make the machine available at a low price to a broad spectrum of users (including to those who would use it only a little), while earning the value of the patent from sales of ink and other supplies (thus recovering more from those using the machine more). Without the ability to price discriminate in this way, not only would the patentee be worse off, but society (and many consumers) would be worse off as well, because, at a higher (uniform) price, fewer mimeograph

---

[12] By contrast, *Motion Picture Patents* is unpersuasive. The Court's main concern seemed to be that the patentee had already reaped enough reward:

> Assuming that the plaintiff has been paid an average royalty of $5 on each machine sold, . . . it has already received over $200,000 for the use of its patented improvement, which relates only to the method of using the films which another had invented, and yet it seeks by this device to collect . . . what would doubtless aggregate many times this amount . . . .
>
> A restriction which would give to the plaintiff such a potential power for evil over an industry which must be recognized as an important element in the amusement life of the nation . . . is plainly void . . . .

243 U.S. at 518-19. Such an *ipse dixit* judicial declaration of what reward to a particular patentee is fair is inconsistent with the principle that the patent system is a *market*-based system, in which the value of a patented invention is measured by what users are willing to pay for it. *See* Bowman at 54. It is no surprise that *Motion Picture Patents* has been effectively overruled legislatively and by this Court.

machines would be produced and many consumers that would otherwise be able to purchase them would have to do without.

The suggestion that "the first purchaser will be willing and able to pay an amount sufficient" to reward the patentee full value of the patented invention, Dell Br. 9, reflects not economic principle but wishful thinking combined with lack of imagination. To cite one example, recovery from the first purchaser may be totally impractical where there is an established market based on infringement, with prices that do not reflect the value of a patentee's intellectual property. More generally: markets, but not courts, can be relied on to identify efficient arrangements.[13]

A similar analysis applies to the single-use-only restriction in *Mallinckrodt*. The value to a hospital-purchaser of the patented invention is likely to be related to the intensity of use of the patented article (a medical device known as a nebulizer). If a hospital were able to re-use the device, the patentee might well have to increase the price of the device to recover the value of the invention. As even critics of *Mallinckrodt* acknowledge, it is possible that recycling of the devices was *inefficient* – more costly than producing a new one – but that a recycler could still undersell the patentee because its price did not include the value of the intellectual property. *See* Richard H. Stern, *Post-Sale Patent Restrictions After* Mallinckrodt – *An Idea in Search of Definition*, 5 Alb.

---

[13] Petitioners argue that "patentees are not entitled to more powerful price discrimination tools than are available to ordinary sellers." Pet'rs Br. 50. But of course they are: they are given a right to exclude and to grant restricted licenses to practice the patent.

L.J. Sci. & Tech. 1, 11 (1994). This sort of "Robin Hood-ism," *id.* – rules set up to transfer wealth, in this case from inventors to those who wish to exploit their inventions – is highly suspect. *See* Easterbrook, 42 Hous. L. Rev. at 969 ("As long as price terms remain open, judicial adjustment of contracts' terms will make consumers worse off. Judges cannot redistribute income from producers to consumers[.]"); Epstein, *ProCD*, at 106 ("At this point, the contract analysis has a different form of urgency, which is to make sure that efficient contractual provisions are not routinely left on the cutting room floor.").[14]

3. It is no answer to these points to argue, as Petitioners and the government do, that many efficient restrictions may be imposed in other ways, either by altering the form of the restrictions included in contracts with manufacturing licensees or by erecting elaborate systems of contracts. *See* Pet'rs Br. 28-29, 48; U.S. Br. 29. If the substance of the restrictions is benign, Petitioners bear a heavy burden of explaining why patentees and their licensees should not be able to achieve them in the way that is clearest and most straightforward. Petitioners' exhaustion rule would increase the costs of achieving desired allocation of property rights. Such costs are "pure deadweight losses, for there are no analogous costs generated under the freedom of contract alternative." Richard A. Epstein, *Notice and Freedom of Contract in the Law of Servitudes*, 55 S. Cal. L. Rev. 1353, 1361 (1982).

Moreover, Petitioners' exhaustion rule would create arbitrary distinctions among patents and patent-

---

[14] The same analysis applies to *Static Control Components, Inc. v. Lexmark International, Inc.*, 487 F. Supp. 2d 830 (E.D. Ky. 2007).

ees depending on the nature of the patent and the organization of the relevant firm. In the *Univis* case, for example, the patentee presumably chose a distribution structure that reflected its belief that certain steps in the process of producing prescription lenses (and finished eyeglasses) could best be performed by unaffiliated businesses with the arrangements between them governed by contract. *See generally* Ronald H. Coase, *The Nature of the Firm*, 4 Economica 386 (1937). But resale price maintenance was also sufficiently important to the patentee that it licensed *all* downstream distributors of its lenses, at the wholesale and retail level, to ensure that its pricing scheme would be maintained. *See* 316 U.S. at 244-45. If the refusal to enforce the license restriction was sufficiently costly to Univis, it could be induced to integrate downstream into wholesale grinding and even retail distribution, in which case there would be no issue as to its ability to set the price for the patented article.

More generally, the value of a patent should not depend on whether it is licensed to an integrated manufacturer/user rather than to a manufacturer that sells the article to a downstream user. Yet, as a practical matter, Petitioners' exhaustion doctrine would treat the two situations as fundamentally different by allowing licensing restrictions in the first situation that are categorically prohibited in the second. Thus, refusal to respect parties' private ordering not only prevents business arrangements that are in themselves efficient, but may induce patentees to create inefficient structures to avoid the arbitrary impact of an inflexible doctrine. *See Leegin*, 127 S. Ct. at 2722-23.

In sum, while Petitioners would claim "that they want to simplify market transactions, not destroy market choices, . . . they provide no practical or principled basis for distinguishing between the two." Robinson, 71 U. Chi. L. Rev. at 1488.

4. All of this discussion supports a more general point, which is that it serves the interests of both economic efficiency and respect for individual autonomy to give effect to private agreements allocating property rights. What Judge Easterbrook has written with respect to copyright applies, as he notes, to all forms of intellectual property:

> Does anyone really believe that one single allocation of rights to produce and use works best for movies, records, books, architectural plans, photographs, software, and so on? The domain of copyright is vast. The most anyone can hope for in a law is to create a framework – that is, to endow authors with a set of property rights – and let people work out the details for themselves. This is of course the fundamental point in Ronald Coase's essay The Problem of Social Cost, nicely amplified by Calabresi and Melamed in Liability Rules and Property Rules.

Easterbrook, 42 Hous. L. Rev. at 961. To be sure, any system of intellectual property must create an initial system of entitlements – for example, the judicially created entitlement on the part of a purchaser of a patented article to use it without infringing the patent is a sensible one. But

> [w]e must bear in mind *the high possibility of error in the original specification of entitlements* . . . . The risk of error should lead to initial assignments *that are easy to reverse, so that*

> *people may find their own way with the least interference.*

Id. at 971 (emphases added).

The award of patent rights strikes a balance between "the need to encourage innovation and the avoidance of monopolies which stifle competition," *Bonito Boats, Inc. v. Thunder Craft Boats, Inc.*, 489 U.S. 141, 146 (1989), but "the key function of property rights is to create the baseline from which voluntary transactions can take place. It is not . . . to block further voluntary transactions." Epstein, *ProCD*, at 121. "[O]ne traditional argument for both freedom of contract and private property is that they define domains in which individuals may establish both the means and the ends for themselves, to pursue as they see fit (so long as they do not infringe upon the rights of third parties)." Epstein, 55 S. Cal. L. Rev. at 1359. An agreement to purchase a patented article subject to limitations on patent rights should be enforced unless "some very strong reason [is] advanced" for outlawing that arrangement. *Id.*

B. No Legitimate Policy Rationale Supports Petitioners' Exhaustion Rule

The policy rationales offered by Petitioners and supporting *amici* are either unpersuasive or inapposite. *Mallinckrodt* has been the law for 15 years, yet Petitioners and supporting *amici* provide no empirical evidence – or even any examples to show – that the contractual freedom that *Mallinckrodt* upholds has produced any untoward result in the real world. Indeed, in the FTC's comprehensive 2003 analysis of patent-law issues, it made no mention of any exhaustion-doctrine problem, though *Mallinckrodt* had by then been governing law for more than a decade. *See* Federal Trade Comm'n, *To Promote*

Innovation: The Proper Balance of Competition and Patent Law and Policy (Oct. 2003).

1. *Transaction Costs*: Petitioners and the government argue that their exhaustion rule will reduce transaction costs, because patentees will be encouraged to obtain full royalty from the first purchaser of a patented article, thus avoiding the need to negotiate licenses with subsequent purchasers. *See* Pet'rs Br. 49; U.S. Br. 27. This makes no sense. Patentees and first-level licensees are well motivated to establish full royalties at that level, *i.e.*, by including no restriction on use rights accompanying a sale, where it is efficient to do so. The Court's *presumption* that patent rights are exhausted on first sale makes perfect sense: it would be foolish to require parties affirmatively to negotiate a separate license upon sale of patented articles. But where the parties *do* affirmatively alter this presumption through private agreement, they have done so because it would have been *more* costly or difficult to attempt to negotiate a single license. The case of an established market built on a pattern of infringement is one example: where existing prices do not reflect the value of a patented invention, it may be more onerous to restructure the established pricing pattern than to negotiate licenses at more than one level.[15]

---

[15] There are many more reasons why an upstream manufacturer may be unable or unwilling either to determine the value of the patented invention to the downstream purchaser or to structure transactions in a way that effectively distinguishes between the value of the patent to different users. In this case, for example, Intel may have lacked information concerning the value of the invention to computer manufacturers or it may have been unwilling to gamble on uncertainty about arguments concerning validity and infringement. From the limited information that is available publicly, it appears that the transaction

The government suggests that a patentee might attempt to negotiate restricted licenses "down the chain of distribution, with no obvious stopping point," but, almost in the same breath, it acknowledges the implausibility of this suggestion. *See* U.S. Br. 27-28 & n.10. To negotiate a license agreement with an entity with which the patentee otherwise has no business relationship is costly; the expense of enforcing patent rights is likely much higher. An exhaustion rule is not required to give patentees an incentive to reduce transaction costs – that incentive is automatic.

2. *Antitrust Concerns*: Petitioners and the government suggest that allowing parties to contract around the exhaustion presumption will give rise to antitrust problems or "immunize" antitrust violations. *See* Pet'rs Br. 50-51; U.S. Br. 28-29. It is no accident that no illustration is offered. Though an agreement to allocate patent rights could violate the antitrust laws, the antitrust laws are available to address that possibility, as the government itself has affirmed. *See* 2007 Report at 6. But there is no explanation of how an allocation that is attendant on a sale of a patented article is any more likely to produce anti-competitive effects than any other type of patent-related agreement – to the contrary, such agreements are perhaps uniquely *un*likely to produce any such effects because they are invariably vertical arrangements. Consistent with the learning

---

between Intel and Respondent was a complicated one that involved many patents (and perhaps other issues). There is no reason offered to explain why Intel and Respondent should be prevented from establishing patent peace *inter se* unless they also went the additional step of calculating the value of the patents to the downstream computer manufacturers that practiced them.

reflected in the last three decades of antitrust decisions, there is no basis for a blanket bar on vertical restrictions as a substitute for targeted analysis of particular restrictions.

3. *Consumer Protection*: Various *amici* suggest that, without a rigid exhaustion rule, consumers will either acquire products without the right to use them or lose other valuable entitlements such as the right to resell or the right to repair. *See* Consumers Union Br. 7, 9; AERA Br. 13-15. These arguments reflect a profound distrust of markets. If a patentee grants a license to manufacture and sell while retaining the right to exclude purchasers from use, the royalty will reflect the value of the rights granted, not others. If a patentee sells an article while retaining the right to exclude certain uses (or with limitations on use that limit the purchasers right to repair), the price of the article will reflect the limitation on the rights granted. *See* Epstein, 55 S. Cal. L. Rev. at 1360.

If there is any unfairness, it comes from awarding to the purchaser a right to practice a patent for which the purchaser did not pay. This case is illustrative: from all that appears, Intel did not pay for, and thus did not charge its customers for, any right to license its customers to practice Respondent's patents, leaving it to Petitioners and Respondent to resolve that issue. Petitioners were notified, and Intel presumably suffered loss of goodwill. That all of these costs were willingly incurred by both Respondent and Intel illustrates just how daunting the problem of contracting at a single level for the full value of the patents must have been.

4. *Information Costs*: Related to the transaction-cost argument is the claim that Petitioners' rule will lower information costs. *See, e.g.*, CCIA Br. 9. This

is unfounded. In the case where a patentee sells a patented article, the default exhaustion presumption will ensure that, unless the customer is informed of any restriction on the license granted, the ordinary presumption of unfettered use applies. In the case of sales by licensees, an inflexible rule saves no information costs. There would be no presumption that the seller of an article would be granting a license to a patent that it did not own; the only way for the purchaser to determine whether the seller has a license is if the information is separately disclosed. Any such disclosure, however, could equally disclose any limitations. And, of course, that is precisely what happened here.[16] *See also* Robinson, 71 U. Chi. L. Rev. at 1486-87.

5. Petitioners' *amici* criticize the patent system and the Federal Circuit for their supposed overprotection of patent rights. *See, e.g.*, CCIA Br. 11-14; Dell Br. 20-22. The simple answer to these arguments is that they have nothing to do with this case. If there are problems with validity or infringement standards, they should be directly addressed. There is no principled reason to single out for condemnation limited licenses granted upon the sale of a patented article.

Dell argues that the exhaustion rule is justified because "the only situation in which respondent's strat-

---

[16] Some suggest that, in the absence of an inflexible exhaustion rule, idiosyncratic restrictions will proliferate. *See* AAI Br. 22. Not so. *See* Robinson, 71 U. Chi. L. Rev. at 1486 ("[I]f the law allowed the creation of time-share interests in watches, it would have no more effect on the market for watches than releasing a sterile liger [a cross between a lion and a tiger] from the zoo into the wild would have on the gene pool of feline predators.").

egy makes sense . . . is when the patent owner asserts its claim *after* the target has made a significant investment in the alleged infringing technology." Dell Br. 14. This argument is shrewd, first, because it suggests that nothing legitimate is lost by adopting a rigid exhaustion rule and, second, because it taps into a sense that patent owners may profit unduly where their invention has already been commercialized. But the argument is wrong on both counts. *First*, as *A.B. Dick* and *Mallinckrodt* illustrate, restrictions on use may be imposed by a patentee or its licensee at the outset for pro-competitive reasons. *Second*, granting for the sake of argument that "lock-in" may occur, an exhaustion rule would do nothing to address it; it would simply place a premium on careful contract drafting and timing.

CONCLUSION

The court of appeals' judgment should be affirmed.

Respectfully submitted,

AARON M. PANNER
Counsel of Record
KELLOGG, HUBER, HANSEN,
TODD, EVANS & FIGEL, P.L.L.C.
1615 M Street, N.W.
Suite 400
Washington, D.C. 20036
(202) 326-7900
Counsel for Amicus
Rembrandt IP Management, LLC

December 10, 2007

56645a

32

43pgs No. 06-937

IN THE

Supreme Court of the United States

QUANTA COMPUTER, INC., *et al.*,

Petitioners,

v.

LG ELECTRONICS, INC.,

Respondent.

ON WRIT OF CERTIORARI TO THE UNITED STATES COURT OF APPEALS FOR THE FEDERAL CIRCUIT

BRIEF OF TECHNOLOGY PROPERTIES LIMITED AS *AMICUS CURIAE* IN SUPPORT OF RESPONDENT

ROGER L. COOK
Counsel of Record
GREGORY P. FARNHAM
MEGAN M. CHUNG
TYLER J. GEE
TOWNSEND AND TOWNSEND AND CREW LLP
Two Embarcadero Center
8th Floor
San Francisco, CA 94111
Phone: 415.576.0200
Fax: 415.576.0300
rlcook@townsend.com

Counsel for Amicus Curiae

COUNSEL PRESS
(800) 274-3321 • (800) 359-6859

TABLE OF CONTENTS

Page

Table Of Cited Authorities iv

Interest Of Amicus Curiae 1

Summary Of Argument 3

Argument 6

I. This Court Should Avoid The Broad Ruling That Petitioners Seek And That Would Jeopardize The Ability Of Technology Companies To Engage In Efficient Licensing Programs 6

A. LGE's Licensing Program Is A Variation Of Widespread Licensing Arrangements Within The Electronics And Computer Industries 6

B. Licensing Programs In Technological Industries Tend To Be Two-Tiered Arrangements Based On Differences Between Components, Systems, And Methods 8

II. LGE's Licensing Program Is Permissible Under 35 U.S.C. § 271(d), Which Provides That The Sale Of Intel Components Does Not Prohibit LGE From Obtaining Relief For Petitioners' Infringement Of LGE's System Patents 20

Contents

Page

III. The *Univis* Exhaustion Doctrine Does Not And Should Not Be Applied To Situations Where The Patent Owner's Entire Reward For The Invention Is Not Derived From The First Authorized Sale 26

A. The *Univis* Exhaustion Doctrine Is Expressly Limited To Situations Where The Patent Owner's Entire Reward Is Derived From The First Authorized Sale. 27

B. The *Univis* Exhaustion Doctrine Should Not Be Extended Beyond The Facts Of *Univis*. 28

1. The *Univis* Exhaustion Doctrine Should Not Be Extended To Situations Where The Patent Owner Derives No Reward From The First Authorized Sale 28

2. The *Univis* Exhaustion Doctrine Should Not Be Extended To Situations Where, As In The Present Case, The Patent Owner Derives Some Compensation But Not The Entire Reward From The First Authorized Sale 32

Contents

Page

C. Permitting Two-Tier Licensing Does Not Involve Unreasonable Restraint On Alienation, Threats To Competition, Or Entrapment. 33

Conclusion 34

TABLE OF CITED AUTHORITIES

Page

Cases:

Aro Mfg. Co. v. Convertible Top Replacement Co.
365 U.S. 336 (1961) 10-11

Cold Metal Process Co. v. McLouth Steel Corp.
41 F. Supp. 487 (E.D. Mich. 1941),
aff'd on other grounds, 126 F.2d 185
(6th Cir. 1942) 14

Dawson Chemical Co. v. Rohm & Haas Co.
448 U.S. 176 (1980) 25

General Talking Pictures Corp.
v. Western Elec. Co. 305 U.S. 124 (1938) 16

KSR Int'l Co. v. Teleflex Inc.
__ U.S. __, 127 S. Ct. 1727 (2007) 10

Leeds & Catlin Co. v. Victor Talking Mach. Co.
213 U.S. 301 (1909) 10, 23

Mercoid Corp. v. Mid-Continental Inv. Co.
320 U.S. 661 (1944) 10, 22, 23, 24

Motion Picture Patents Co.
v. Universal Film Mfg. Co.
243 U.S. 502 (1917) 7

Priebe & Sons v. Hunt
188 F.2d 880 (8th Cir. 1951) 10

Cited Authorities

Page

United States v. Masonite Corp.
316 U.S. 265 (1942) 28

United States v. Univis Lens Co.
316 U.S. 241 (1942) ..... *passim*

Statutes:

35 U.S.C. § 271(c) 25

35 U.S.C. § 271(d) . ..... *passim*

Other Authorities:

E. Robert Yoches, *Licensing Patents for Software and Computer Technology,* Intellectual Property Today, Oct. 1994 10

Giles S. Rich, *Infringement Under Section 271 of the Patent Act of 1952,* 35 J. Patent Off. Soc'y 476 (1953) 24, 25

Hearings on H. R. 3760 before Subcommittee No. 3 of the House Committee on the Judiciary, 82d Cong., 1st Sess., 152 (1951) 24

Richard H. Stern, *Post-Sale Patent Restrictions After Mallinckrodt – An Idea in Search of Definition,* 5 Alb. L. J. Sci. & Tech. (1994) 12, 13, 14, 17

Cited Authorities

Page

Thomas C. Meyers, *Field-of-Use Restrictions as Procompetitive Elements in Patent and Know-How Licensing Agreements in the United States and the European Communities*, 12 Nw. J. Int'l L. & Bus. 364 (1991) 18

United States Patent and Trademark Office *Manual of Patent Examining Procedure* ... 9

Treatises:

Donald S. Chisum, *Chisum on Patents: A Treatise on the Law of Patentability, Validity, and Infringement* (2005) 24

Jay Dratler, Jr., *Licensing of Intellectual Property* (2007) 17

INTEREST OF AMICUS CURIAE

Technology Properties Limited ("TPL") was founded in Silicon Valley in 1988.[1] Since then TPL has supported the development of numerous ground-breaking technologies invented by individuals needing financial support to pursue their inventive abilities outside of an employment relationship. TPL offers partnerships that allow individual innovators to maintain ownership and the benefits of the fruits of their labor and ingenuity that would otherwise not be possible.

One such inventor, Chuck Moore, invented and developed a series of microprocessor technology innovations. With the support of TPL, a series of patents was granted for Mr. Moore's microprocessor technology. The patented technology has been adopted by the industry and is fundamental to the architecture and structure of today's microprocessor devices.

The value of the Moore microprocessor technology has been recognized by some of the world's preeminent developers of microprocessors and the products they enable, who have purchased licenses to Moore's microprocessor technology. The fruits of these licensing transactions are fueling another round of innovation as Mr. Moore and TPL have jointly funded the development of revolutionary new microprocessor technology with the proceeds of the licensing transactions.

---

1. Pursuant to Rule 37.6, TPL certifies no counsel for a party authored this brief in whole or in part, and no counsel or party made a monetary contribution intended to fund the preparation or submission of this brief. No person other than TPL, its members or its counsel made a monetary contribution to its preparation or submission. The parties have consented to the filing of this brief by submitting letters of blanket consent.

TPL has a substantial interest in this case through its patent licensing practices. The success of TPL's alliances with inventors such as Mr. Moore is possible by structuring licensing relationships that enable the development and dissemination of innovative technologies and products. Like many other patent holders in the computer and electronics industries, TPL licenses the patented technology of its inventor partners through a two-tier licensing program, of which Respondent LG Electronics, Inc.'s ("LGE") licensing arrangement is a variant. In one form, TPL sometimes issues *royalty-free* licenses to make and sell products covered by component patents (such as patents covering microprocessor technology) to component and microchip manufacturers who do not receive the right to convey use rights to their customers, and separately issues *royalty bearing* use licenses to system manufacturers. These two-tier licensing arrangements permit inventors to fully benefit from their patents, and provides funding that enables further technological innovation.

Petitioners in this appeal seek a broad ruling, under which a sale of patented component would exhaust all of a patent owner's patents. Such a ruling would not only be inappropriate, but could have serious and unintended adverse consequences, not just for TPL, but for the computer and electronics industries in general, where two-tier licensing is common.

SUMMARY OF ARGUMENT

Petitioners' argument to this Court constitutes nothing less than an attack on the prevalent patent licensing model found throughout the computer and electronics industries. Fortunately, however, this appeal may be resolved in a much simpler, more straightforward manner, with far less far-reaching and extreme consequences, than the complicated, radical, and legally unsound approach proposed by Petitioners.

A standard licensing arrangement found in technology-based industries is the two-tier model. Under the two-tier model, a patent owner enters into separate license agreements with component manufacturers and end product (system) manufacturers. The LGE licensing arrangement at issue in this case is a type of a two-tier licensing program. There are many benefits and efficiencies accomplished by these licensing arrangements. For example, these programs provide the patentee with greater quality control in finished products incorporating the patentee's technology. Unless the patentee has the ability to decide to which consumer or industrial product manufacturers it will license the use of its technology, it cannot exercise quality control over the end product. Two-tier licensing programs also allow the patent owner to distinguish among different uses for a patented component among different end products, and to adjust prices in different market segments depending on the value of the patented technology in that market segment. This permits wider and more efficient distribution of patented technology at costs tailored to actual use of the technology. Two-tier licensing arrangements also allow patentees to obtain royalties

on their system and method patents as well as their component patents. A patentee's ability to recover royalties on its entire patent portfolio is critical to the ability of computer and electronics companies to continue to develop innovative technology.

Petitioners seek to have all two-tier licensing models declared invalid by endorsing an unwarranted extension of the patent exhaustion doctrine, arguing that the sale of a patented component prevents a patent owner from entering into two-tier licensing arrangements that enforces a patentee's rights against both component and end product manufacturers. In LGE's case, Petitioners' arguments are, however, defeated by 35 U.S.C. § 271(d), which expressly provides that the two-tier licensing arrangement exemplified by LGE's license with Intel cannot serve as a basis to deny relief to LGE for Petitioners' infringement of LGE's system patents.

The legislative history of section 271(d) reveals that the statute was intended to ensure that a patent owner's right to enforce a patent is not compromised under circumstances that implicate the doctrine of contributory infringement. Section 271(d) accordingly permits a patentee to derive revenue from or license acts that would constitute contributory infringement if performed by someone who is not the patentee and is not otherwise authorized to perform those acts. In this case, the doctrine of contributory infringement arises because the sale of the Intel components to Petitioners would constitute contributory infringement of LGE's system patents if the sales were made by a party other than Intel. Section 271(d)(1) thus provides that the fact that LGE obtains revenue from Intel's authorized sale of

components to Petitioners (sales that would constitute contributory infringement under LGE's system patents if LGE had not licensed and consented to Intel's sale of those components) cannot serve to deny relief for or defeat LGE's claims against Petitioners for infringement of LGE's system patents. Similarly, section 271(d)(2) provides that LGE cannot be denied relief for Petitioners' infringement based upon Intel's licensed sales of its components to Petitioners. Section 271(d) thus clearly permits two-tier licensing arrangements such as LGE's, by establishing that the sale of patented components cannot operate to deny relief for infringement of system patents.

Moreover, patent exhaustion does not invalidate two-tier licensing for other reasons. For example, patent exhaustion is premised on improper "extension of the patent monopoly"; however, two-tier licensing is *within* the patent monopoly, whether implemented by licensing patented or contributorily infringing components separately from patented systems, or by licensing make and sell rights separately from use rights. Similarly, patent exhaustion is premised on a patent owner receiving his *entire* reward for the patented invention upon first sale — unlike *all* two-tier licensing, particularly where manufacture and sale of a patented component is licensed *royalty free*, separate from royalty bearing use rights.

ARGUMENT

I. This Court Should Avoid The Broad Ruling That Petitioners Seek And That Would Jeopardize The Ability Of Technology Companies To Engage In Efficient Licensing Programs

A. LGE's Licensing Program Is A Variation Of Widespread Licensing Arrangements Within The Electronics And Computer Industries

Petitioners seek a far-reaching holding that threatens to create radical change within the technology industries. The prevalent licensing arrangement in the electronics and computer industries is a two-tier model, where a patent owner enters into separate license agreements with component manufacturers and sub-system or end product (system) manufacturers. This allows the patent owner to obtain the full reward to which it is entitled under its full patent portfolio, and permits more efficient pricing schemes as well as greater quality control over the use of the patented technology. Petitioners seek to have all such licensing models declared invalid by seeking an unwarranted extension of the patent exhaustion doctrine and failing to recognize limits imposed by Congress' enactment of 35 U.S.C. § 271(d) in 1952. The ruling sought by Petitioners would create havoc in the electronics and computer industries and would potentially discourage further innovation and technological advances in those fields.

The LGE licensing arrangement is an example of two-tier licensing. At the first tier, LGE licensed Intel to manufacture and sell components such as

microprocessors and chipsets, components that are protected under component patents owned by LGE. *See* Respondent's Brief at 1, 2. At the second tier, LGE required purchasers of the Intel components to obtain from LGE a license to LGE's system and method patents if the purchasers wished to use LGE's system and method patents. LGE accomplished this through provisions in its license with Intel that forbade Intel to convey any system or method patent licenses to its customers, and required Intel to notify prospective purchasers that they would not receive a license from Intel to combine the components with non-Intel components. JA164, JA176-77, JA198.

Relying heavily on this Court's decisions in *Motion Picture Patents Co. v. Universal Film Mfg. Co.*, 243 U.S. 502 (1917), and *United States v. Univis Lens Co.*, 316 U.S. 241 (1942), Petitioners argue that LGE's licensing arrangement is improper because it potentially allows LGE to obtain "double royalties." *See, e.g.*, Petitioners' Brief at 8-10, 16, 48-49, 51-53. As discussed below, by attempting to extend this Court's precedents on exhaustion far beyond established boundaries and failing to recognize limits imposed by Congress' enactment of section 271(d)(1)-(3) in 1952, Petitioners seek to invalidate one of if not all of the most pervasive and efficient licensing programs being used within the technological industries.

B. Licensing Programs In Technological Industries Tend To Be Two-Tiered Arrangements Based On Differences Between Components, Systems, And Methods

Present-day manufacturing processes in the electronics and computer industries are strikingly more complex than those involved in the Court's exhaustion cases from 65 to 180 years ago. Today, the manufacture of intricate and complex computer and electronics systems involve multiple stages, from transistor to ultimate consumer product, with different manufacturers contributing to different stages of the overall process. Even at the component level, multiple technologies will be employed to create a multi-purpose microchip. These components may then be purchased and combined into subsystems by different manufacturers, and still other manufacturers may combine components and subsystems into consumer end products. Each new step or stage implicates new and different inventions and, often, different patents.[2]

Today's two-tier licensing programs sometimes involve different kinds of patents that cover processes

---

2. There are thousands of patents directed to the parts of the computer system and the system itself that can be found by searching the patents on the website of United States Patent and Trademark Office. For example, U.S. Patent Nos. 6,014,718, 6,675,248 and 6,950,440 are all patents directed to a computer system. Examples of patents for chipset and microprocessors that may be used in the computer systems are U.S. Patent Nos. 6,112,308, 6,636,962 and 7,266,641. Examples of the transistors that may be used as basic components in computer systems are 6,037,629, 6,610,566 and 6,919,605.

or products used or created at different stages of the manufacturing process. Modern inventions often have multiple patentable features. This is especially true in the electronics industry where a computer system, a chipset used in that computer system, a chip incorporated into that chipset, and a transistor on that chip may all be independently patentable. In addition, a process claim may be directed to a method of making an independently patentable product or a method of using an independently patentable product. United States Patent and Trademark Office, United States Department of Commerce, *Manual of Patent Examining Procedure*, § 806.05(e)-(f) (2006).

Patent claims thus are often drafted, or separate patent applications are filed, to encompass all of the separately patentable features of the invention. Patents are drafted to cover an invention regarding a particular, useful component (referred to herein as "component patents"). Separate patents may then be drafted as "system patents," which encompass systems or subsystems that combine independently patentable components and create novel interactions and that are patentable in their own right:

> Another type of claim often found in computer-related patents is a system claim, which is merely an apparatus claim describing a system of interconnected components. System claims also have their own characteristics, *such as not covering individual components of the system*. Thus, system claims would *not directly cover* the activity of a developer

> making a *component* of the system, *even if that component is key to the system.*

E. Robert Yoches, *Licensing Patents for Software and Computer Technology*, Intellectual Property Today, Oct. 1994, at 5 (emphasis added).

Component patents and system patents thus constitute separate inventions, even if a patented system incorporates a patented component. *See, e.g., Mercoid Corp. v. Mid-Continental Inv. Co.*, 320 U.S. 661, 667-68 (1944) ("Whether the parts are new or old, the combination is the invention and it is distinct from any of them."); *Leeds & Catlin Co. v. Victor Talking Mach. Co.*, 213 U.S. 301, 318 (1909) ("A combination is a union of elements, which may be partly old and partly new, or wholly old or wholly new. But, whether new or old, the combination is . . . an invention . . . distinct from them."); *Priebe & Sons v. Hunt*, 188 F.2d 880, 884-85 (8th Cir. 1951) (claims directed to machine and claims directed to components of machine are distinct and independently enforceable). *Cf. KSR Int'l Co. v. Teleflex Inc.*, __ U.S. __, 127 S. Ct. 1727, 1739-43 (2007) (discussing standard for granting a patent based on combination of previously-known elements embodying a different invention than the prior inventions).[3]

---

3. Petitioners try to erase the distinction between component patents and system patents by suggesting that the invention in LGE's patents is wholly contained on the components sold by Intel, and the system patents accordingly contain nothing novel and do not constitute actual inventions. Petitioners' Brief at 6-7, 39. *See Aro Mfg. Co. v. Convertible Top*

(Cont'd)

By the same token, contemporary licensing programs which license use rights separately from make and sell rights recognize that the right to make and sell components, such as microprocessors and other microchips, involve one skill set (e.g. the considerable skill of manufacturing inexpensive and reliable integrated circuits) which is considerably different from the skill of designing and manufacturing commercially desirable consumer and industrial products having the price, form and function most desired across a broad market segment, or in a particular market niche. Commonly, many of the functions built into the integrated circuit are functions specified by or developed at the instance of the system maker.

Similarly, contemporary licensing programs sometimes issue separate licenses for different categories of patents to different types of manufacturers within the manufacturing chain, so that transistor manufacturers receive a license to patents governing transistors, component manufacturers are licensed under component patents, and system and subsystem manufacturers are granted licenses to system and/or method patents. Richard H. Stern, the authority upon whom Petitioners place their greatest reliance, *see* Petitioners' Brief at 13, 28, 31-32, *approves* of two-tier

---

(Cont'd)

Replacement Co., 365 U.S. 336, 345-46 (1961) ("The basic fallacy in respondent's position is that it requires the ascribing to one element of the patented combination the status of the patented invention itself."). If Petitioners wished to challenge the validity of LGE's system patents, it should have brought those challenges in the trial court. It is far too late to try to insinuate invalidity of the system patents on appeal.

licensing arrangements such as LGE's. Stern actually endorses multi-tiered licensing programs with limited licenses as a way to accomplish the *same commercial objectives* without risking exhaustion. He writes that instead of using post-sale restrictions, patentees can "restrict customers' use of patented products" by first "rely[ing] on different claims-drafting techniques" such as patenting "both the process and the apparatus of the invention," and second, "structur[ing] transactions on the basis of limited licenses of such claims. *Appropriate claims-drafting techniques coupled with careful structuring of transactions may permit counsel to avoid many of the legal problems that occur because of the exhaustion doctrine.*"[4]

But, why should it be necessary to burden desirable commercial objectives with the necessity of "appropriate claims drafting techniques" and "careful structuring of transactions" merely to evade the exhaustion doctrine? Exhaustion is premised upon the evils of "*extending* the patent monopoly," whereas two-tier licensing operates "*within* the patent monopoly." Congress itself specifically approved of allowing inventors to derive revenue from acts and licenses *within* the patent monopoly (i.e. "which would otherwise constitute contributory infringement") when it enacted Section 271(d) in 1952 — a fact never noted by Stern and others who see exhaustion as a legal threat to two-tier licensing.

Component or microchip manufacturers thus may be separately licensed to the patent owners' component

4. Richard H. Stern, *Post-Sale Patent Restrictions After Mallinckrodt - An Idea in Search of Definition*, 5 Alb. L. J. Sci. & Tech. at 1, 22 & n.76 (1994).

patents, or enter into patent cross-licenses. Like LGE's license with Intel, these licenses make clear that the component manufacturer may not convey a system or method license to purchasers of the manufacturers' components. *See* JA164, JA176-77, JA 198. There are various ways of accomplishing this. The license may limit the licensee to selling its components only to persons that have already obtained a license from the patentee to practice the system patents. The LGE-Intel license is another variation, where the component licensee is required to put the purchaser on notice that purchase of the component does not license the purchaser to practice the patentee's system, in effect informing the purchaser that it must seek a license from the patentee before it can combine the component with other components in a system.

Two-tier licensing arrangements may also distinguish between component patent and method patents. Richard Stern argues that *manufacture and sale* of a component or machine patented under a component or system patent may be legitimately sold independently from a license to *use* the component or machine under a separate method patent[5] — a practice is legally indistinguishable from licensing manufacture and sale separately from use, since both are "*within* the patent monopoly." Stern refers to licensing practices in the textile machinery industry that have been upheld as enforceable, where purchasers of machines for making yarn are put on notice that the payment for the machines does not include a license to practice the method patent to make yarn with the machines (even though the

5. Stern, *supra* note 4, at 24-27.

machines have no other substantial use). The purchaser thus is required to obtain a separate license to the method patent. Stern declares that such an arrangement would be enforceable, because it does not implicate the exhaustion doctrine:[6]

> Probably, a court would uphold such an arrangement as legitimate under the prior exhaustion doctrine case law .... The patentee imposes no explicit restriction on customers' use of their property. Rather, the patentee merely "fails to grant a license" under the patentee's separate method patent. . . . The case law in the main indicates that, in such circumstances, *the exhaustion doctrine is inapplicable.*

Id. at 25. Stern then goes on to provide another, hypothetical example of a permissible licensing practice, where a microprocessor might be subject to both a product patent and a method patent. Stern states that it would be perfectly legitimate for the seller of the microprocessor to require the purchaser to enter into a license to use the microprocessor under the method patent. *See id.* at 26. Thus does Petitioners' favorite authority become a champion of the very licensing arrangement used by LGE in this action.

---

6. *Id.* at 24 & n.84 (citing to *In re Yarn Processing Patent Validity Litig.*, 541 F.2d 1127, 1135 (5th Cir. 1976); *Duplan Corp. v. Deering Milliken, Inc.*, 444 F. Supp. 648, 671-72 (D.S.C. 1977), *aff'd*, 594 F.2d 979 (4th Cir. 1979)). *See also Cold Metal Process Co. v. McLouth Steel Corp.*, 41 F. Supp. 487 (E.D. Mich. 1941), *aff'd on other grounds*, 126 F.2d 185 (6th Cir. 1942).

Examples of companies in the electronics and computer industries using a two-tier licensing program are abundant. One patentee, for example, uses a two-tier licensing model pursuant to which there are two classes of licensees: (1) Semiconductor manufacturers (referred to as "implementation licensees") who incorporate the patented technology onto their integrated circuits, and who have licenses to that technology; and (2) manufacturers of consumer electronics products (referred to as "system licensees") who purchase the integrated circuits from the implementation licensees, and who incorporate the circuits into consumer end products. *See* Dolby Labs., Inc., Annual Report (Form 10-K), at 5 (Sept. 28, 2007). Another patent holder employs "a two-tiered system whereby semiconductor manufacturers are licensed to build and sell semiconductor implementations of the Company's technology solutions," and also licenses consumer product manufacturers for *use* of the technology. *See* SRS Labs. Inc., Annual Report (Form 10-K), at 6 (Dec. 31, 2000). Another company employs a multi-tiered licensing program that grants licenses to use different portions of its intellectual property portfolio, including licenses to wireless technology, and different licenses to products that incorporate the patented technology. *See* Qualcomm Inc., Annual Report (Form 10-K), at 85 (Sept. 30, 2007). Similarly, another company has a multi-tier licensing program that distinguishes among component versus consumer product manufacturers. *See* Immersion Corp., Annual Report (Form 10K), at 7 (Mar. 16, 2007). Still another company provides a royalty free field-of-use license to the component manufactures specifically restricting their license to the intermediate component market and to provide their products *only* to the end-user manufacturers who are

already licensees or are "qualified purchasers", *i.e.* persons who are informed that they must also obtain a license.[7]

There are many advantages and efficiencies accomplished by two-tier licensing programs. These programs provide the patentee with greater quality control in finished products incorporating the patentee's technology. This is important, because poor quality or defective end products that are introduced into the consumer market may harm the desirability of the patentee's technology in the marketplace. With the introduction of new electronics or computer products, there are often different kinds of competing technologies that produce the same kind of end product. If the patentee does not have the ability to decide to which consumer product manufacturers it will license to its system patents, it cannot exercise any kind of quality control over the end product. If, as a result, poor quality products flood the market, consumers may judge the technology itself to be defective. The ability of a patentee to guide the use of its inventions in the consumer product market has been much discussed in the literature concerning licensing of intellectual property:

> In the process of granting licenses to others, a firm can achieve some degree of control not only

---

7. TPL uses such an arrangement. Patent law has long affirmed the patentee's right to restrict a license to a particular field or use without triggering patent exhaustion. *General Talking Pictures Corp. v. Western Elec. Co.*, 305 U.S. 124, 126-127 (1938) ("[W]here a patented invention is applicable to different uses, the owner of the patent may legally restrict a licensee to a particular field and exclude him from others. * * * That a restrictive license is legal seems clear.").

> over the exploitation of its own innovations, but also over the direction of development in its industry. . . . [A]n innovator can to some extent control the evolution of its intellectual property through negotiated limitations in the licensing agreement. Through . . . contractual limitations it is able to negotiate, a firm can influence how other companies use its technology in the marketplace, and hence how that technology develops.

Jay Dratler, Jr., *Licensing of Intellectual Property* at 1-27–1-28 (2007). A patentee can only accomplish this if it is empowered to license end product manufacturers separately under its system and method patents, independent of its licensing of component manufacturers.

Two-tier licensing programs also allow a patentee to distinguish among different uses for a patented component among different systems or end products, and charge higher royalties for high-demand uses, and lower royalties for low-demand uses. Such a licensing program allows the patent owner to adjust prices among different market segments depending on the value of the patented technology to the systems manufacturer. The patent owner accordingly should be permitted to set up his licensing program to recover different royalties from different market segments. *See* Stern, *Post-Sale Patent Restrictions After Mallinckrodt*, 5 Alb. L. J. Sci. & Tech. at 15-17 (1994) (discussing how the same technology may have different values in different market niches based on varying uses of the technology and the degree to which the range of the technology's abilities are exploited, and the utility of permitting a

patent owner to charge different rates depending on the nature and the extent of the use of the patented technology).

This is a highly efficient result, as it allows the patentee to recover maximum royalties for the system patents. At the same time, it also would make the component available to all users at rates that are tailored to the use that the purchasers make of the components, which most likely would not happen if the patentee could not distinguish among purchasers. *See* Thomas C. Meyers, *Field-of-Use Restrictions as Procompetitive Elements in Patent and Know-How Licensing Agreements in the United States and the European Communities*, 12 Nw. J. Int'l L. & Bus. 364, 367-71 (1991).

These licensing arrangements also allow patentees to obtain royalties on their system and method patents as well as their component patents. A patentee's ability to recover royalties on its various component, system, and method patents is critical to the ability of computer and electronics companies to continue to develop innovative technology. Participants in the computer and electronics industries incur considerable expense to develop new technology that advances the abilities, speed, and convenience of their products. There is an enormous cost in research and development, which includes the research and development of ideas that ultimately prove to be unworkable. In addition, only a small percentage of completed inventions are ultimately granted patent protection. Patent royalties thus must recoup not only the cost of the development of the patented invention itself, but also the cost of failed attempts to develop and patent

technology. Restricting patent owners' ability to recover royalties by limiting the ability to obtain royalties to a single tier in the manufacturing chain and to a single class of patents would discourage and inhibit innovation in technology-based industries.

Petitioners object to two-tier licensing arrangements mainly due to the notice provision in the LGE-Intel license. As Petitioners concede, if Intel had been authorized only to sell its chips to LGE licensees, there would have been no exhaustion against sales to non-licensees (because such sales would not have been authorized), and LGE accordingly would be permitted to enforce its patent rights against either Intel or the non-licensed customer. *See* Petitioners' Brief at 51 ("[I]f LGE wanted for some reason to divide its royalty between Intel and Quanta, it could have authorized Intel to sell only to purchasers with a prior license from LGE. A sale in violation of such a restriction would entitle LGE to sue Intel for infringement, and perhaps the buyer as well."). Permitting this licensing model (authorizing sale of chips only to persons who have first purchased a license), while forbidding its marketplace equivalent (authorizing sale of chips to persons who have been notified that they need a license to incorporate those chips into a system) would be nonsensical.

Petitioners' specious distinction would also inhibit efficient dissemination of the technology in the marketplace. Forbidding Intel from selling to persons other than those already licensed by LGE would make dissemination of the technology dependant upon LGE's clairvoyant abilities to determine who may become an end-user manufacturer and would require LGE to embark upon the expensive task of licensing without knowing where

there is market demand for the technology. Allowing LGE to license *after* persons with notice of LGE's patent rights have adopted the technology, and determined its worth to them in the marketplace, is a far more efficient way to disseminate the technology.

II. LGE's Licensing Program Is Permissible Under 35 U.S.C. § 271(d), Which Provides That The Sale Of Intel Components Does Not Prohibit LGE From Obtaining Relief For Petitioners' Infringement Of LGE's System Patents

The two-tier licensing arrangement exemplified by LGE's license with Intel and the license that LGE requires Petitioners to obtain in order to practice LGE's system patents are expressly permitted by Congress' enchantment of section 271(d) of Title 35 in 1952. Section 271(d) provides in relevant part:

> No patent owner otherwise entitled to relief for infringement or contributory infringement of a patent shall be denied relief or deemed guilty of misuse or illegal extension of the patent right by reason of his having done one or more of the following: (1) derived revenue from acts which if performed by another without his consent would constitute contributory infringement of the patent; (2) licensed or authorized another to perform acts which if performed without his consent would constitute contributory infringement of the patent. . . .

Subsections (1) and (2) of section 271(d) provide that the licensed sale of contributorily infringing components

under a two-tier licensing arrangement may not constitute grounds for denying relief for infringement of the system patents that are the subject of the second tier of such licensing programs. Applying the facts of this action to the language of section 271(d)(1), for example, reveals that if LGE obtains revenue from Intel's authorized sale of components to Petitioners (sales that would constitute contributory infringement under LGE's system patents if LGE had not licensed and consented to Intel's sale of those components) this cannot serve to deny relief for or defeat LGE's claims against Petitioners for infringement of LGE's system patents. LGE's ability to obtain royalties under its license with Intel, and its plan to demand royalties from Petitioners under its system patents, does not constitute an illegal extension of either its component or system patents.

Section 271(d)(2) similarly approves LGE's two-tiered licensing arrangement. Petitioners argue that LGE, having licensed Intel to make and sell components containing LGE's patented technology, must be precluded from demanding that Quanta also obtain a license in order to practice LGE's system patents. Petitioners' Brief at 12, 38-41, 44. Section 271(d)(2), however, explicitly provides that such an argument cannot prevail to deny LGE relief for Quanta's infringement of LGE's system patents. Section 271(d)(2) provides that LGE cannot be denied relief from Petitioners' infringement of LGE's system patents because of Intel's licensed sales of its components (which would have constituted contributory infringement if they had not been authorized by LGE). Subsection (2) thus clearly allows for two-tiered licensing arrangements such as LGE's.

It is important to recognize the specific scope of section 271(d). The statute is meant to affirm the unique doctrine of contributory infringement, which concerns acts that, if not performed by a patentee or its authorized licensees, would constitute contributory infringement. Thus the language of section 271(d)(1)-(2) permits a patentee to derive revenue from or license acts that would constitute contributory infringement if performed by someone who is not the patentee and is not authorized to perform the acts. The history leading up to the passage of section 271(d) confirms this focus and intent of that statute.

The enactment of section 271(d) was largely a reaction to the Court's much-criticized opinion in *Mercoid Corp. v. Mid-Continent Inv. Co.*, 320 US 661 (1944). *Mercoid* condemned the patent owner's attempt to derive revenue from acts which, if performed by another without his authority, would have constituted contributory infringement. The patentee in *Mercoid* owned a system patent to a heating system, and licensed another entity, Minneapolis-Honeywell, to make and sell combustion stoker switches used in the heating systems. 320 U.S. at 662. Minneapolis-Honeywell made clear in its advertising that the right to use the heating system was only granted to the user when the stoker switches were purchased from Minneapolis-Honeywell. *Id.* at 663. Although the combustion stoker switches themselves were not patented, there was no use for them other than in the patented heating system. *Id.* at 664. Any unauthorized sale of stoker switches for use in the patented heating systems thus constituted contributory infringement. *Id.* at 668. The patent owner in *Mercoid* accordingly sued an unauthorized manufacturer of stoker

switches for contributory infringement for the sale of those components. The Court, however, believed that the patent owner's attempt to obtain royalties through its sale of unpatented stoker switches constituted an impermissible extension of the patent monopoly, and held that the patent owner was precluded from obtaining relief for contributory infringement. *Id.* at 666-68.

Mercoid came under heavy criticism. The problem with the decision was that the Court objected to a licensing arrangement that it considered an attempt to *extend the patent monopoly* to an unpatented component, namely the stoker switches. *See id.* at 667-68. This, despite the fact that the stoker switches were wholly *within the patent monopoly* since, as the Court acknowledged, unauthorized sale of the stoker switches constituted contributory infringement, and that the patent owner could have enjoined the unauthorized manufacturer of the stoker switches from selling them. *Id.* at 668. While purportedly recognizing the doctrine of contributory infringement, the Court in fact partially overruled *Leeds & Catlin v. Victor Talking Machine Co.*, 213 U.S. 325 (1909), which the Court described as holding that "he who sells an unpatented part of a combination patent for use in the assembled machine may be guilty of contributory infringement." *Mercoid*, 320 U.S. at 668. Justice Douglas's further statement, "[w]hat residuum [of contributory infringement] may be left we need not stop to consider," *id.*, created further doubt as to the scope of contributory infringement, even as to whether it still existed.

Although the Court was concerned about the patent owner extending its patent monopoly to unpatented

components, the patent owner, practically speaking, did in fact already have patent rights to the stoker switches because the contributory infringement doctrine allowed the patent owner to prevent others from selling them. *See* Donald S. Chisum, *Chisum on Patents: A Treatise on the Law of Patentability, Validity, and Infringement*, at § 17.02[5] (2005). The fact that the patent owner received royalties on the sale of the stoker switches therefore cannot be said to have improperly extend the patent right. *Mercoid* and the doctrine of contributory infringement were irreconcilable. Giles S. Rich, *Infringement Under Section 271 of the Patent Act of 1952*, 35 J. Patent Off. Soc'y 476, 490-91 (1953); Hearings on H. R. 3760 before Subcommittee No. 3 of the House Committee on the Judiciary, 82d Cong., 1st Sess., 152 (1951) (testimony of Giles S. Rich).

In enacting section 271(d), Congress intended to overrule *Mercoid* and to reestablish and expand the doctrine of contributory infringement. Hearings on H. R. 3760 before Subcommittee No. 3 of the House Committee on the Judiciary, 82d Cong., 1st Sess., 151-152, 173-174 (1951) (testimony of Giles S. Rich). This Court has observed that "the relevant legislative materials abundantly demonstrate an intent both to change the law and to *expand significantly the ability of patent owners to protect their rights against contributory infringement.*" *Dawson Chemical Co. v. Rohm & Haas Co.*, 448. U.S. 176 (1980) (emphasis added); *see generally id.* at 199-215 (conducting an extensive analysis of § 271's legislative history). Thus sections 271(d)(1)-(3) are specifically drafted to ensure that a patent owner's right to enforce a patent is not compromised under circumstances that implicate the doctrine of contributory infringement. Section 271(d)

uses broad permissive language, which is consistent with the legislative intent to "significantly expand" patent owners' ability to protect their rights against contributory infringers. *Dawson Chemical Co.*, 448. U.S. at 203. Giles S. Rich, the drafter of section 271, has written that the "net effect" of the statute is to "render [patents] more effective as protection for inventions." Rich, 35 J. Patent Off. Soc'y at 499.

Against this backdrop, it can be seen why section 271(d) specifically applies to two-tier licensing arrangements such as the one involved in this case. In this case, the contributory infringement doctrine arises because the sale of the Intel components would constitute contributory infringement of LGE's system patents if the sales were made by a party other than Intel. *See* 35 U.S.C. § 271(c) (2006). The clear intent of section 271(d) is that the sale of the contributorily infringing components cannot operate to deny relief for infringement of system patents. Petitioners' argument that sale of the component constitutes exhaustion the LGE's patents is *precisely* the kind of argument that section 271(d) was meant to prevent.[8]

---

8. The United States recognizes the applicability of section 271(d)(2) when it acknowledges that "[s]ection 271(d) might be construed to entitle a patentee in respondent's position to relief." Brief for the United States as Amicus Curiae On Petition for a Writ of Certiorari to the United States Court of Appeals For the Federal Circuit at 20 n.7. Section 271(d)'s applicability is confirmed by the government's flawed attempt to explain why the statute does *not* apply. The government first argues that the statute only "addresses the relationship between the doctrines of patent misuse and contributory infringement." *Id.* Section 271(d), however, is not

(Cont'd)

III. The *Univis* Exhaustion Doctrine Does Not And Should Not Be Applied To Situations Where The Patent Owner's Entire Reward For The Invention Is Not Derived From The First Authorized Sale

The *Univis* exhaustion doctrine is premised upon an assumption that the patent owner has received the entire reward he is entitled to upon the first authorized sale of the patented product. This was true as a matter of fact in the *Univis* case, but is a false premise when applied as a universal truth to the modern business environment.

(Cont'd)
limited only to patent misuse, but is rather much broader, stating that no patent owner "shall be *denied relief* or deemed guilty of misuse or *illegal extension of the patent right*" for having done one of the acts enumerated in the statute.

The government next maintains that section 271(d) cannot be deemed to apply to any situation involving a claim of patent exhaustion because "[a] patentee whose infringement claim is barred by principles of patent exhaustion is not 'otherwise entitled to relief,' and therefore obtains no benefit from Section 271(d)." *Id.* This argument, however, not only distorts the language of the statute, but would also render the entire section a nullity. The word "otherwise" must have a referent – there must be something explicit to which the sense of "other than" applies. "Otherwise" here clearly refers to the second half of the section, and the subparts set out therein. The proper understanding of the phrase "otherwise entitled to relief for infringement" is that the patent owner must be entitled to relief for infringement *apart from* or *other than* the circumstances subsequently set forth in the subsections. Those subsections set out circumstances that had previously been understood to constitute grounds to deny relief for infringement. For the government to argue that LGE is not "otherwise entitled to relief" based on conduct that clearly falls within subsections (d)(1) and (d)(2) would defeat the very purpose of those subsections.

A. The *Univis* Exhaustion Doctrine Is Expressly Limited To Situations Where The Patent Owner's Entire Reward Is Derived From The First Authorized Sale.

Petitioners conveniently construe *Univis* – the authority upon which they so heavily rely, and which animates nearly their entire argument – to hold that patent exhaustion *necessarily* flows from the authorized sale of an article covered by a patent. This purpose-driven interpretation of *Univis* is not only designed to provide Petitioners a free ride on patented technology, it is also incorrect as a matter of law and entirely illogical.

In *Univis*, the Court concluded that the patent owner's rights were exhausted after sale of lens blanks destined for grinding into finished lenses in accordance with the patent owner's patent. In reaching this conclusion, the Court first concluded the patent owner had elected to derive its *entire reward* from *sale* of the lens blanks:

> The rewards of the [patent owner] for the exploitation of the patents and the patented lenses are derived *wholly* from the sale by the Lens Company of the blanks, from the proceeds of which the . . . royalty is paid.

Univis, 316 U.S. at 244 (emphasis added). The Court then supported its decision with case authorities which either held or assumed that the purpose of the patent law is fulfilled "when the patentee *has received his reward* for the use of his invention [upon] *sale of the article*."

> Our decisions have uniformly recognized that the purpose of the patent law is fulfilled with respect to any particular article when the patentee has received his reward for the use of his invention by the sale of the article, and that once that purpose is realized the patent law affords no basis for restraining the use and enjoyment of the thing sold.

Univis, 316 U.S. at 251 (emphasis added).

Given the narrow underpinnings of *Univis*, Petitioners are wrong to argue that exhaustion *necessarily* flows from *any* authorized sale of an article covered by a patent. The most that can be said is that *Univis* holds that patent exhaustion applies to sales of patented articles where the patent owner has elected to derive his entire reward for the invention from the first authorized sale of the patented product, and has therefore relinquished all patent control over the product.

B. The *Univis* Exhaustion Doctrine Should Not Be Extended Beyond The Facts Of *Univis*.

1. The *Univis* Exhaustion Doctrine Should Not Be Extended To Situations Where The Patent Owner Derives No Reward From The First Authorized Sale

The *Univis* exhaustion doctrine should not be extended to situations where the patent owner derives no reward whatsoever from the first authorized sale. *See United States v. Masonite Corp.*, 316 U.S. 265, 278 (1942) ("The test has been whether or not there has been such a disposition of the article that it may fairly be said that the patentee has received his reward for the use of that article.").

This can easily be illustrated by reference to the following hypothetical. Assume that a patent owner in LGE's position licenses Intel to *make and sell* LGE patented chips *royalty free*, expecting to collect its *entire reward* for *use* of its patented chip only from downstream manufacturers who incorporate those chips into finished consumer products (such as televisions, DVD players, computer printers, etc.) and industrial products (such as servers, manufacturing equipment, quality control equipment, etc.), with adequate pre-purchase notice that they do not receive a license to use the chip. In such a case, the patent owner unlike *Univis* would have received *absolutely no reward* from authorized manufacture and sale of the chips.

This is precisely the type of two-tier licensing program that TPL and numerous others employ for reasons which are perfectly legitimate and easily understood. Licensing the manufacture and sale of the chips for free eliminates the possibility that the chip maker might someday be sued for infringement. This is favored for judicial economy reasons since it eliminates potential litigation between the patent owner and the chip maker. This is also favored in the marketplace, where modern electronics product manufacturing chains are multi-level and sophisticated in that they involve innumerable components provided by many different suppliers, and the ultimate end product manufacturer requires assurance from all suppliers in the chain that use of the suppliers' products does not expose the ultimate manufacturer to non-indemnified patent infringement liability. By granting a royalty-free license to the chip maker, the patent owner has eliminated a potential blockage in the manufacturing chain and,

thereby has facilitated the free flow of patented technology to the ultimate consumer.

This license marketing approach also facilitates dissemination of the patented technology in the marketplace, where those who incorporate those chips into consumer or industrial products can decide whether the technology embodied in the chip has merit for their particular products. Royalty-free dissemination of the patented chip in the marketplace thus allows adoption of the patented technology to depend upon actual market demand, rather than upon the patent owner's willingness and ability to conduct and execute an expensive and risky pre-adoption licensing campaign, without knowing whether or not market demand will develop in the future. Allowing patent owners to license *after* persons with notice of LGE's patent rights have adopted the technology and determined its worth to them in the marketplace is a far more efficient way to disseminate the technology.

This strategy also allows the value (and therefore royalty price) of the patented technology to be easily assigned from market to market based on actual experience, rather than setting royalties based on speculation. Moreover, this value may vary greatly from market to market. A chip having cutting edge wireless technology may have an exceedingly high value in the market for wireless access points (where the latest wireless technology may be a critical selling point), but less value in the market for wireless computer printers (where the printing capability is the critical selling point, and the specific wireless technology employed is comparatively unimportant).

This approach also allows the royalties for use of the technology to be borne by the person to whom it has the greatest value. It might make no sense for a chip maker who might otherwise sell a chip for a $20 to be economically and unrealistically burdened by an obligation pay a $50 royalty for incorporating a feature which has no use to the chip maker, when this royalty may be willingly borne by a person who incorporates the chip into a high definition television which sells for $1000 and to whom the feature has important market value. This strategy thus results in a self-adjusting pricing structure that depends upon actual supply and demand, rather than an artificial royalty structure based upon what a patent owner and chipmaker might envision and mutually agree upon as the future value of the technology.

This licensing arrangement also permits the patent owner to implement and enforce quality control measures upon the system maker. Absent the right to directly license those who incorporate patented chips into their consumer and industrial products, the patent owner has no contractual license relationship within which he may negotiate with the end product manufacturer to implement contractual quality control measures. In the absence of privity of contract, the patent owner has no ability to implement quality control measures at the end product level.

2. The *Univis* Exhaustion Doctrine Should Not Be Extended To Situations Where, As In The Present Case, The Patent Owner Derives Some Compensation But Not The Entire Reward From The First Authorized Sale

Modern two-tier licensing programs include variations on the scenario described in the preceding section. Within the microchip industry, for example, some patent owners license chipmaker royalty-free, while others receive some minimal compensation from the chipmaker. Thus in some instances, the chipmaker pays a relatively small transaction fee intended to compensate the patent owner for the not insignificant cost of the license transaction itself, such as attorney fees and travel expenses associated with face-to-face license negotiations. Fees of this sort do not compensate the patent owner for use of the invention and are not a "reward for use of the invention."

In other instances (such as in the present case), the chipmaker and the patent owner cross license each other's patents. In this case, the patent owner receives consideration for the right to make and sell chips covered by the patent owner's patents in the right to make and sell chips covered by the cross-licensee's patents. Where the patent owner conditions its cross-license upon a requirement that the cross-licensee notify all purchasers that they do not receive a license under the patent owner's patents, however, it is abundantly clear that all parties understand that the patent owner does not intend the cross-license rights to constitute its entire compensation for use of the patented invention.

In still other instances, the chipmaker may pay a relatively small royalty for sale of the chip. Once again, however, where the license agreement specifies that the chipmaker must notify all purchasers that they do not receive a license under the patent owner's patents, all parties plainly understand that the patent owner does not receive his or her entire compensation for use of the patented invention upon sale of the chips.

Just as exhaustion should not apply when a patentee enters into a royalty-free license with a the chipmaker, so too exhaustion should not apply when the patent owner receives some compensation from the chipmaker, but such compensation is plainly understood by all to not constitute the entire compensation for use of the invention.

C. Permitting Two-Tier Licensing Does Not Involve Unreasonable Restraint On Alienation, Threats To Competition, Or Entrapment.

Modern two-tier licensing arrangements of the type described herein do not involve unreasonable restraints on alienation or anti-competitive restraints. For example, none of these licensing arrangements involve tying restraints which would prevent or discourage any person from purchasing products (other than those protected by the patent owner's patent rights) supplied by the patent owner's competitors. Similarly, none of these licensing arrangements require any person to participate in a regimented market, by agreeing, for example, to minimum resale prices.

By the same token, there is no entrapment of microchip customers since all receive advance notice that their purchases do not carry with them licenses to use the patent owner's patents. Persons who purchase the chips receive fair notice of the patents, and of the fact that they do not receive a license under those patents. Purchasers such as Petitioners have complete freedom of action not to purchase the chips, to purchase the chips and take a license, or to purchase the chips and contest infringement, validity or enforceability of the patents. Given these commercially fair and reasonable options, Petitioners ought not be given a free ride just because the patent owner has granted a limited license to their chip vendor.

CONCLUSION

Petitioners have attacked LGE's two-tier licensing practice of issuing separate licenses to chipmakers and system makers. Over the course of the petition and merits briefs, Petitioners have made wide ranging assertions of law and fact utilizing patent exhaustion in an unprecedented and never intended fashion to directly attack and indirectly threaten industry-wide two-tier licensing practices at the core.

This has generated great concern that the Court may issue broad rulings that could have substantial unintended consequences to companies like TPL, who rely upon patent licensing to generate revenue for continued product development.

TPL has been particularly concerned that Petitioners, the Government and even LGE, as well as the authorities, like *Univis* and Stern, which animate

their positions and arguments, are wholly without regard to Congress's post-*Univis* enactment of Section 271(d), which has direct bearing on the specifics of this case, and profound policy implications for two-tier licensing in general.

Congress intended Section 271(d) to reverse *Mercoid*, which was based on *Univis*, and also expand the patent owner's rights to license and derive revenues for his or her patent rights in situations involving "products whose unauthorized sale" would constitute contributory infringement. This was a direct refutation of *Mercoid* which held that such revenue deriving activities were "extensions of the patent monopoly" because those products were "unpatented" despite the fact that they were in fact protected by the patent law and therefore actually *within* the "patent monopoly."

In the face of Congress' enactment of statutes giving patent owner's broad rights to derive revenues including license revenues from activities that are *within* the "patent monopoly," Petitioners' position should be soundly rejected, not only with regard to the specific facts at hand, but broadly insofar as it purports to attack two-tier licensing practices within the "patent monopoly," whether in the form of separate licenses for system and component patents, separate licenses for make and sell rights versus use rights to components, separate licenses for components whose use would contributorily infringe system patents if unauthorized, or otherwise. All are *within* the patent monopoly and should not give rise to judicial extinguishment of patent rights.

Respectfully submitted,

ROGER L. COOK
Counsel of Record
GREGORY P. FARNHAM
MEGAN M. CHUNG
TYLER J. GEE
TOWNSEND AND TOWNSEND AND CREW LLP
Two Embarcadero Center
8th Floor
San Francisco, CA 94111
Phone: 415.576.0200
Fax: 415.576.0300
rlcook@townsend.com

Counsel for Amicus Curiae

56533 F

29 pgs

No. 06-937

IN THE

Supreme Court of the United States

QUANTA COMPUTER, INC, ET AL.,

Petitioners,

v.

LG ELECTRONICS, INC.,

Respondent.

ON WRIT OF CERTIORARI
TO THE UNITED STATES COURT OF APPEALS
FOR THE FEDERAL CIRCUIT

BRIEF OF VARIOUS LAW PROFESSORS AS AMICI CURIAE IN SUPPORT OF RESPONDENT

TROY A. PAREDES
One Brookings Drive
Campus Box 1120
St. Louis, MO 63130
(314) 935-8216

R. POLK WAGNER
3400 Chestnut Street
Philadelphia, PA 19104
(215) 898-4356

F. SCOTT KIEFF
Counsel of Record
One Brookings Drive
Campus Box 1120
St. Louis, MO 63130
(314) 935-5052
Counsel for Amici Curiae

December 10, 2007

WILSON-EPES PRINTING CO., INC. – (202) 789-0096 – WASHINGTON, D. C. 20002

BEST AVAILABLE COPY

TABLE OF CONTENTS

Page

TABLE OF AUTHORITIES iii

INTEREST OF AMICI CURIAE 1

STATEMENT OF CASE 1

SUMMARY OF ARGUMENT 3

ARGUMENT 5

I. The Federal Circuit's Treatment of the First Sale Doctrine Is Required by the Precedents of this Court 5

II. Restrictive License Contracts of the Type at Issue in this Case Cannot and Should Not Trigger First Sale Defense 10

III. A Contract-Focused First Sale Analysis Is Sound Public Policy 14

A. *Contractual Restrictions of the Type Used in this Case Are Not Foreign to Property and Contract Law Generally and Are Commonly Used across Society with Ease* 14

Page

B. *The Law has Long Recognized that Patent Law Does Not Include a Good Faith Purchaser Rule* 16

C. *The Doctrines of Implied License by Equitable Estoppel and Legal Estoppel Appropriately Step in to Fill Needed Gaps* 17

CONCLUSION 20

APPENDIX – LIST OF AMICI a1

TABLE OF AUTHORITIES

CASES — Page

Adams v. Burke,
84 U.S. 453 (1873) 5, 6

Aro Mfg., Co. v. Convertible Top Replacement Co.,
377 U.S 476 (1964) 6

B. Braun Med., Inc. v. Abbott Labs.,
124 F.3d 1419 (Fed. Cir. 1997) 7

Bandag, Inc. v. Al Bolser's Tire Stores, Inc.,
750 F.2d 903 (Fed. Cir. 1984) 19

Dawson Chem. v. Rohm & Haas,
448 U.S. 176 (1980) 9, 10, 16, 17

De Forest Radio Tel. Co. v. United States,
273 U.S. 236 (1927) 18

General Talking Pictures Corp v. Western Elec. Co., 304 U.S. 175 (1938) 6

Gjerlov v. Schuyler Labs., Inc.,
131 F.3d 1016 (Fed. Cir. 1997) 17

Holbrook v. Taylor,
532 S.W.2d 763 (Ky. 1976) 20

Ill. Tool Works Inc. v. Independent Ink, Inc.,
547 U.S. 28 (2006) 10

Int'l Salt Co. v. United States,
332 U.S. 392 (1947) 10

Jefferson Parish Hosp. Dist. No. 2 v. Hyde,
466 U.S. 2 (1984) 10

CASES (continued) **Page**

Keeler v. Standard Folding Bed Co.,
157 U.S. 659 (1895) 6

Leegin Creative Leather Prods., Inc., v. PSKS, Inc., 127 S. Ct. 2705 (2007) 9

Mallinckrodt v. Medipart,
976 F.2d 700 (Fed. Cir. 1992) 6

McCoy v. Mitsuboshi Cutlery, Inc.,
67 F.3d 917 (Fed. Cir. 1995) 17

Met-Coil Sys. Corp. v. Korners Unlimited, Inc.,
803 F.2d 684 (Fed. Cir. 1986) 19

Mitchell v. Hawley,
83 U.S. 544 (1873) 6

Morton Salt Co. v. G.S. Suppiger Co.,
314 U.S. 488 (1942) 10

ProCD, Inc. v. Zeidenberg,
86 F.3d 1447 (7th Cir.1996) 7

State Oil v. Khan,
522 U.S. 3 (1997) 9

United States v. Loew's Inc.,
371 U.S. 38 (1962) 10

United States v. Univis Lens Co.,
316 U.S. 241 (1942) 8, 9

Wang Labs., Inc. v. Mitsubishi Elecs. of Am., Inc., 103 F.3d 1571 (Fed. Cir. 1997) 18, 19, 20

Wallace v. Holmes,
29 F. Cas. 74 (C.C.D. Conn. 1871) 17

CASES (continued) Page

Waterman v. Mackenzie,
138 U.S. 252 (1891) 6

STATUTES

1952 Patent Act 6, 9, 10
35 U.S.C. § 271 10
35 U.S.C. § 271 (d) 10
U.C.C. § 2-312(c) 17

OTHER AUTHORITIES

Thomas W. Merrill & Henry E. Smith,
Optimal Standardization in the Law of Property: The Numerus Clausus Principle,
110 Yale L.J. 1, (2000) 15

INTEREST OF AMICI CURIAE

Amici are law professors who teach, research, and have an interest in the theory, law, and practice of patents, property rights, and contracts. Amici have no other stake in the outcome of this case,[1] but are interested in ensuring that patent law develops in a way that best promotes innovation and competition. A full list of amici is appended to the signature page. Both petitioner and respondent have consented to the submission of this brief by lodging blanket consents with the Court.

STATEMENT OF CASE

The patentee in this case entered into an express written contract with a large, sophisticated party, Intel, to settle a set of disputes about patent infringement by giving to Intel a limited license under the patents. The contract expressly limited the settlement's effect on third parties and was reached at a price that reflected these modest ambitions. It made sense for Intel to seek such a blanket settlement of intellectual property cases to buy freedom from suit for Intel, but only Intel, because Intel might otherwise have been found guilty of inducing third parties to infringe when it sold its products.

---

[1] Pursuant to Sup. Ct. R. 37.6, the amici represent that no counsel for a party authored this brief in whole or in part, and no counsel or party made a monetary contribution intended to fund the preparation or submission of this brief. No person other than the amici or their counsel made a monetary contribution to its preparation or submission except that The Hoover Project on Commercializing Innovation paid only the actual printing and filing costs. The parties' general letters of consent to the submission of amicus briefs have been filed with the clerk.

Petitioners in this case also are large sophisticated commercial entities. They bought products from Intel with notice of the limited terms of the license to Intel and the opportunity to negotiate a price in their sales contracts from Intel that reflected the limited reach of Intel's license from the patentee.

Petitioners now want this Court to overturn longstanding precedents of this Court and the Federal Circuit, that have applied the first sale doctrine as only a default rule that recognizes certain terms (such as a license under a patent to use a purchased product) that may reasonably be implied into a contract for sale of a patented article from the patentee. In the interest of collecting an undue windfall for themselves, Petitioners want the first sale doctrine to be applied more expansively and rigidly to convert a case of express contracting over a limited license to only one commercial party into a blanket license to a host of commercial parties with actual notice, regardless of the efforts by all parties to contract for a more modest result at a lower price.

The present amici do not dispute efforts by any party to explore arguments that might achieve the basic business result of patent license that is urged by Petitioners in this case, so long as those arguments are supported by the facts when made in accordance with existing categories of legal doctrines such as express license, implied in fact license including by first sale, or license implied by equitable or legal estoppel, etc. But amici urge this Court to reject Petitioners' invitation to create a new rule that stretches the longstanding first sale doctrine into an *uber* immutable rule that a license to one is a license to all.

SUMMARY OF ARGUMENT

This case highlights the tension between two somewhat conflicting legal principles: one generally in favor of freedom of contract, and one generally in favor of freedom from unknown servitudes running with chattels. Petitioners and supporting amici are right to point out the law's skepticism towards restrictive servitudes as well as the general understanding that no servitudes run with the sale of ordinary chattels. But they are wrong to portray this policy as being so strong and far reaching as to prevent the commonplace contractual restrictions at issue in this case, and they are wrong to suggest that this case involves an ordinary sale of chattels. Accordingly, the invitation to resolve the tension by overturning the well-established precedent that respects and fosters the freedom of contract in rigid adherence to the view that unknown servitudes should not run with chattels must be rejected. Petitioners' approach is unnecessary and would discourage innovation and competition, as well as interfere with the economically efficient efforts of patentees and purchasers to establish their respective rights by contract.

Courts have long recognized a host of legal and equitable doctrines to protect purchasers of patented goods from unfair surprise and charges of infringement when the purchasers have been led by the patentees reasonably to believe that no patent infringement will lie. Examples of these doctrines include implied-in-fact licenses, through doctrines such as first sale, and licenses implied in law, through doctrines such as equitable estoppel or legal estoppel. As a result, the relief urged by Petitioners

and supporting amici simply is not needed. Moreover, reversing the Federal Circuit in this case would give a huge undue windfall to opportunistic third party buyers who have actual knowledge that purchased products simply were not licensed under the relevant patents. Large commercial buyers purchase at prices that reflect the need for subsequent patent licenses; and interference with this relationship would harm, not help, transactions around intellectual property rights.

Importantly, the contract underlying this case is not even one involving a typical sale of chattels. This case involves an express, written contract containing undisputed terms between large commercial and sophisticated parties to settle a set of disputes about patent infringement among themselves, while expressly limiting the settlement's effect on third parties. The settlement occurred at a price the licensee had the opportunity to negotiate down to a level that reflected the settlement's modest ambitions. The freedom for large commercial parties to strike deals of the type involved in this case is essential to avoiding and resolving disputes, and fostering innovation and competition. Reversing the longstanding case law that respects such licenses would have several related deleterious effects. First, it would give an undue windfall to opportunistic third parties who would be able to assert "licenses" beyond those they knowingly purchased. Second, it would frustrate the reasonable expectations of the countless commercial actors who have settled cases and struck patent license agreements in reliance on the reasonable expectation that the limited terms of their contracts would be enforced. Although a transitional

issue, the large number of patents licensed and the length of patent term leave its impact both broad and long. And third, it would make settling future disputes significantly more difficult.

The careful balance between freedom of contract and freedom from servitudes on which countless commercial actors have reasonably relied has stood the test of time. This Court should reaffirm these longstanding precedents, as well as the decision below.

ARGUMENT

The first sale doctrine applied by the Federal Circuit in this case and others fully complies with the longstanding precedents of this Court. Under these precedents, express license contracts of the type at issue in this case cannot and should not trigger the first sale defense. Maintaining the contractual foundations of the first sale doctrine is sound public policy and should be reaffirmed by this Court.

I. The Federal Circuit's Treatment of the First Sale Doctrine Is Required by the Precedents of this Court

1. The Federal Circuit's first sale doctrine closely follows the longstanding precedents of this Court stemming as far back as *Adams v. Burke*, 84 U.S. 453 (1873), which held that "when the patentee . . . sells a machine or instrument whose sole value is in its use, he receives the consideration for its use and he parts with the right to restrict that use." *Id.* at 456. Even the early cases in this Court's first sale jurisprudence made clear that the doctrine arises

from the interaction between patent law and contract law. For example, this Court focused on determining that the particular restrictions at issue in the *Adams* case were "not contemplated by the statute nor within the reason of the contract." *Id.* Similarly, in *Mitchell v. Hawley*, 83 U.S. 544 (1872), this Court acknowledged the importance of the freedom of contract, re-emphasizing the ability to restrict contractually the otherwise implied-in-fact patent license at issue in that case. This Court stated, "Sales of the kind may be made by the patentee with or without conditions, as in other cases." *Id.* at 548. In effect, this Court treated the first sale doctrine as a default rule that parties could opt out of contractually.

The power to contract around the default first sale rule has been made clear in numerous cases over the ensuing years. *See, e.g.*, *Waterman v. Mackenzie*, 138 U.S. 252, 255 (1891); *Keeler v. Standard Folding-Bed Co.*, 157 U.S. 659, 662 (1895); *Gen. Talking Pictures Corp. v. W. Elec. Co.*, 304 U.S. 175 (1938). The view also was reaffirmed after the 1952 Patent Act in cases like *Aro Mfg. Co. v. Convertible Top Replacement Co.*, 377 U.S. 476, 484 (1964), which pointed out that "it is fundamental that sale of a patented article by the patentee or under his authority carries with it an 'implied license to use.'" (quoting *Adams v. Burke*, 84 U.S. 453, 456 (1873)).

2. The Federal Circuit has closely followed the precedents of this Court in this area. For example, in *Mallinckrodt v. Medipart*, 976 F.2d 700 (Fed. Cir. 1992), the court upheld a single use restriction in a label license as long as the terms were not objectionable on grounds applicable to contracts in

general — for example, if they violate a rule of positive contract law such as by being adhesionary or unconscionable.[2] Explaining a bit further, the court in *B. Braun Med., Inc. v. Abbott Labs.*, 124 F.3d 1419, 1426 (Fed. Cir. 1997), stated that the first sale

> doctrine . . . does not apply to an expressly conditional sale or license. In such a transaction, it is more reasonable to infer that the parties negotiated a price that reflects only the value of the "use" rights conferred by the patentee. As a result, express conditions accompanying the sale or license of a patented product are generally upheld.

3. Not only is this contract-centered view of the first sale doctrine well established, but it makes good policy sense. In the case of a patentee's unrestricted sale of a patented product into commerce, the buyer presumably has paid the patentee not only for title to the physical product (a sale of product), but also for permission to use the product for its intended purpose (a license under the patent). That is, the first-sale doctrine operates as a default rule, to recognize certain terms (such as a license under a patent to use a purchased product) that may reasonably be implied into a contract for sale of a patented article from the patentee.

---

[2] The Federal Circuit's view also is shared by prominent decisions in sister circuits. *See, e.g., ProCD, Inc. v. Zeidenberg*, 86 F.3d 1447 (7th Cir.1996) (Easterbrook, J.) (non-commercial use restriction in shrink-wrap copyright license for computer program held valid and enforceable as a contractual limit on use).

Under well-established principles of law and equity, there are several routes to arriving at a conclusion about implied terms of a contract. Implied-in-fact terms may be found as a matter of interpretation from evidence of the parties' intent. Implied-in-law terms are imposed in the interest of fairness to ensure that both parties receive the rights for which they bargained. But as courts have long recognized, the implied-in-law doctrine only provides a default rule, and differing terms in a sale – such as a sale accompanied by a promise to make only a single use of the patented article – will be enforceable as long as they do not violate some other rule of positive law.[3] The logic of this view is straightforward: absent a direct conflict with positive law, there is no room for the law to imply terms when the parties themselves have provided their own agreed-to terms as a matter of their express and properly formed contract.

4. While Petitioners and supporting amici make much of the decision in *United States v. Univis Lens Co.*, 316 U.S. 241 (1942), that case simply does not support the broad interpretation they suggest. To the contrary, the most that *Univis* can be fairly understood to have accomplished is a slight

---

[3] This contract-based view of the first sale doctrine also shows why it is important to avoid being confused by the alternative label of "exhaustion" that is often used. By treating the patent right as having been used up, the term "exhaustion" suggests an immutable state of affairs, leaving no opt out possible. But the contractual nature of the first sale doctrine focuses attention on the actual terms of the initial sale that is said to give rise to the license in order to encourage observers to determine whether the parties opted out of the default terms otherwise implied into such deals.

expansion of the first sale doctrine to apply regardless of whether "the patented article [is sold] in its completed form or . . . before completion for the purpose of enabling the buyer to finish and sell it." *Id.* at 252. In addition, *Univis* must be understood as what it expressly purports to be: a government enforcement case brought under the Sherman Antitrust Act to enjoin the enforcement of contract requirements to maintain certain resale prices that were determined to be illegal under then-prevailing views of antitrust. Unlike in *Univis*, the contract terms at issue in this case have not been held to be illegal, and prevailing antitrust jurisprudence now treats such vertical pricing restraints under the more permissive rule of reason analysis, instead of under the old *per se* illegality analysis. *See State Oil v. Khan*, 522 U.S. 3 (1997); *Leegin Creative Leather Prods., Inc., v. PSKS, Inc.*, 127 S. Ct. 2705 (2007).

Indeed, the contract-based view of doctrines like first sale was a central animating principle behind the 1952 Patent Act, which codified our present patent system and expressly revived contributory infringement by substantially narrowing patent misuse and statutorily overruled cases doctrinally related to *Univis*. For many years before the '52 Act, patentees were severely limited in the exercise of the rights to sue or license those who induced or contributed to infringement by the too-often applied doctrine of patent misuse, which stemmed largely from then-existing antitrust principles. As this Court expressly recognized, a central purpose behind the '52 Act was the revival of contributory infringement and inducement of infringement and the limiting of patent misuse.

Dawson Chem. v. Rohm & Haas, 448 U.S. 176 (1980). Section 271 set forth express provisions for direct, induced, and contributory infringement as well as an express provision that effectively allowed a patentee to elect to sue, license, or even restrictively license anyone otherwise guilty of direct or indirect infringement without committing patent misuse. *See* 35 U.S.C. § 271(d). *See also Ill. Tool Works Inc. v. Indep. Ink, Inc.*, 547 U.S. 28 (2006) (holding that a patent does not support a presumption of market power and abrogating *Morton Salt Co. v. G.S. Suppiger Co.*, 314 U.S. 488 (1942), *Int'l Salt Co. v. United States*, 332 U.S. 392 (1947), *United States v. Loew's Inc.*, 371 U.S. 38 (1962), and *Jefferson Parish Hosp. Dist. No. 2 v. Hyde*, 466 U.S. 2 (1984)). Petitioners' present argument is in conflict with the principles embodied in the '52 Act, as reaffirmed and extensively reviewed by this Court in *Dawson*.

II. Restrictive License Contracts of the Type at Issue in this Case Cannot and Should Not Trigger the First Sale Defense

1. The contractual underpinnings of the first sale defense requires that the defense arise only in situations supporting the inference that a license was conveyed along with the sale of the underlying chattel. But the contract underlying this case does not involve a sale of chattels. The contract in this case involves an express, written contract containing undisputed terms between large commercial and sophisticated parties—terms negotiated with an intent to settle a set of disputes about patent infringement between the parties, while expressly limiting the settlement's effect on third parties, at a

price that reflected the settlement's modest ambitions.

2. The freedom for large commercial parties to strike deals of this type is essential to avoiding and resolving disputes and fostering innovation and competition. Here, it made sense for Intel and the patentee to enter into a limited license because essentially, the patentee and Intel were entering into a blanket settlement of intellectual property cases that bought freedom from suit for Intel, but only Intel. Intel needed the freedom because, for example, Intel might otherwise have been found guilty of inducing third parties to infringe when it sold its products. This settlement made clear that it released Intel from potential liability but did not affect the liability of third parties to the agreement, such as Intel's customers. The large commercial entities that are Intel's customers also had the opportunity to negotiate a price in their sales contracts from Intel that reflected the limited reach of Intel's license from the patentee.

3. A rule that required patent licenses to immutably convey a full license to all downstream users would seriously undermine the ability to avoid and settle cases. Such an all-or-nothing rule would require patentees to transfer more in a license than they might want in given cases, thereby reducing flexibility and decreasing interest in licensing. Similarly, it would require licensees to buy more than they might want in given cases, thereby decreasing their interest in licensing as well. This result is predictable, since one size of settlement does not fit all parties under all circumstances. And that is precisely the practical result of an inflexible,

mandatory first sale doctrine such as Petitioners urge.

Furthermore, because any patent settlement that is reached under Petitioners' rule will license an entire industry, an immutable rule typically would give rise to an enormous coordination problem among the class of potential licensees by requiring them to agree with each other on a price they collectively would agree to pay the patentee. The decision by any significant infringers to hold out from the deal would frustrate the ability of all other infringers and the patentee to reach an agreement that reflects the actual market price.

The bottom line is that Petitioners' approach would make it very difficult to settle patent disputes involving many possible infringers. Any settlement would have to coordinate the interests of all or nearly all of the potentially-infringing population. And while it might well be the case that key supplier companies such as Intel would endeavor to act as *de facto* coordinators, by passing along license costs to customers, the goal of the first sale doctrine has never been and should never be to mandate particular business models. One size rarely fits all, especially in rapidly changing markets like those involving innovation.

4. Petitioners' proposal would also give an undue windfall to third parties who would then be able to assert licenses they never thought they had, including the buyer in this case. The general rule applicable outside the context of a first sale of patented chattels by the patentee is that the purchase of a product does not convey a license that

renders the purchaser free from patent infringement. Especially for large commercial players like those involved in this case, it simply makes sense for the first sale doctrine to be triggered only in cases giving rise to a reasonable belief that a sale included both a chattel and a patent license. In this case, the infringers asserting the first sale defense came to know of their seller's license as they came to buy the chattels. But when they bought the chattels, they also were given express written notice from Intel about Intel's inability to sell them a license. As a result, on the facts of this case, there simply is no chance of confusion, mistake, duress, etc. Quite the opposite, the buyer here is reduced to arguing that it was seduced into thinking it was licensed by reading only half the documentation that seduced it. Large commercial parties like Petitioners generally are expected to read, understand, and be bound by all terms of their contracts.

5. Reversing also would frustrate the reasonable expectations of the countless commercial actors who have settled cases and struck patent license agreements in reliance on the perfectly reasonable expectation that the express terms of their contracts would be enforced, while making it significantly more difficult to settle future disputes. The floodgates would be open to all those buying from limited licensees to claim that they deserve to be beneficiaries to agreements from which they were expressly excluded. The large number of patents that are the subject of such limited licenses and the length of patent term leave this admittedly transitional issue having broad and long impact.

III. A Contract-Focused First Sale Analysis Is Sound Public Policy

There is no need to overturn as an undue imposition on the freedom from servitudes the longstanding first sale doctrine, which recognizes the enforceability of limited licenses, because a number of existing companion doctrines already exist to protect legitimate interests of innocent third parties. As a result, it is possible for all parties to potential transactions to identify sensible categories of cases to which established principles of law or equity apply without resorting to case-by-case judgments of the social desirability of patents where none of the traditional grounds for intervention are present. But of central importance is the ability of parties to determine, *ex ante*, whether their case meets or fails the requirements of the legal tests that trigger these other doctrines when applied on their own terms. Put differently, it would be unfair and inefficient to bestow the protections provided by such doctrines without requiring a showing that all elements of their legal tests have been met. Petitioners' approach would obliterate the nuances of existing legal principles that already accommodate Petitioners' concerns.

A. Contractual Restrictions of the Type Used in this Case Are Not Foreign to Property and Contract Law Generally and Are Commonly Used across Society with Ease

Although petitioners and supporting amici are correct in pointing out that restrictive servitudes in

chattels generally are not recognized,[4] contractual restrictions of the type at issue in this case are remarkably common in daily life, even in ordinary consumer transactions, and are even more common in transactions among large commercial parties. Consider, for example, a typical lease for the rental of real or personal property containing a restriction against subleasing. Even the general view favoring the ability to assign and delegate rights and obligations in intangible assets like contracts fully respects the power of restrictive terms in an underlying contract governing whether or how such third party rights in it can be created.

Courts have long recognized a host of legal and equitable doctrines to protect purchasers of patented good from unfair surprise and charges of infringement, when patentees have led the purchasers reasonably to think that no patent infringement will lie. Examples of these doctrines include implied-in-fact licenses, through doctrines such as first sale, and licenses implied in law, through doctrines such as equitable estoppel or legal estoppel. Also relevant are contract law doctrines governing contract formation, such as mistake, fraud, misrepresentation, duress, mistake, and both procedural and substantive unconscionability, among others.

---

[4] *See* Thomas W. Merrill & Henry E. Smith, *Optimal Standardization in the Law of Property: The Numerus Clausus Principle*, 110 Yale L.J. 1, 18 & n.68 (2000) (pointing out that "American precedent is largely, if not quite exclusively, in accord" with the view that "one cannot create servitudes in personal property").

B. The Law Has Long Recognized that Patent Law Does Not Include a Good Faith Purchaser Rule

It has long been recognized that even an innocent infringer, without knowledge of a patent, who makes something covered by a valid patent claim with her own hands from materials gathered from land she and her ancestors have owned in fee simple absolute since time immemorial, is nonetheless liable for patent infringement. The infringement can be of patents that were in existence at the time the product was made. Later issued patents also may be infringed. Absent a fully paid judgment from a victorious infringement lawsuit against a competitor to convert infringing products into licensed products, even innocent buyers who buy from an infringer can be sued for patent infringement. This Court and Congress have both expressly recognized that patentees may therefore face the daunting task of having to sue for infringement all customers who bought from their competitor and stepped in to help patentees by making available causes of action for indirect infringement like those that motivated the underlying license at issue in this case:

> The court permitted the patentee to enforce his rights against the competitor who brought about the infringement, rather than requiring the patentee to undertake the almost insuperable task of finding and suing all the innocent purchasers who technically were responsible for completing the infringement.

Dawson, 448 U.S. 188 (citing *Wallace v. Holmes*, 29 F. Cas. 74, 80 (C.C.D. Conn. 1871)). Indeed, the risk of widespread infringement across commercial transactions is so well known that it has been expressly allocated by drafters of the Uniform Commercial Code to merchants regularly dealing in goods of the kind who warranty their buyers against infringement and to buyers who warranty their sellers if they provide those sellers with specifications for the goods.[5]

C. The Doctrines of Implied License by Equitable Estoppel and Legal Estoppel Appropriately Step in to Fill Needed Gaps

Although the clearest grant of permission to engage in activities otherwise constituting patent infringement generally is an express grant from the patentee in a contractual license, *see McCoy v. Mitsuboshi Cutlery, Inc.*, 67 F.3d 917 (Fed. Cir. 1995) (license is a contract governed by ordinary principles of state contract law), or even a settlement agreement following a suit for patent infringement, *see Gjerlov v. Schuyler Laboratories, Inc.*, 131 F.3d 1016 (Fed. Cir. 1997) (suit for breach of settlement agreement is matter of state contract law and treble damages under patent law are unavailable), courts have long recognized that the grant need not be express. In addition to the doctrine of first sale as an implied-in-fact contract, at least two distinct additional legal grounds exist to create authority by less than express

---

[5] *See* U.C.C. § 2-312(c).

contractual grant: (1) the doctrine of implied license by legal estoppel triggered when a patentee has licensed or assigned a right, received consideration, and then sought to derogate from the right granted; and (2) the doctrine of implied license by equitable estoppel triggered by a patentee's conduct that reasonably leads another to act in reliance on that conduct in such a way that it would be unjust to allow the patentee to exclude the actions taken in reliance.

The doctrine of implied license by equitable estoppel illustrates the broad reach of these existing doctrines. Equitable estoppel arises in those cases in which the active conduct of a patentee leads some other party to reasonably believe that it has a right to practice the patented invention. For example, as the Federal Circuit wrote in *Wang Labs., Inc. v. Mitsubishi Elecs. of Am., Inc.*, 103 F.3d 1571 (Fed. Cir. 1997):

> The record shows that Wang tried to coax Mitsubishi into the SIMM [short for "Single In-line Memory Module"] market, that Wang provided designs, suggestions, and samples to Mitsubishi, and that Wang eventually purchased SIMMs from Mitsubishi, before accusing Mitsubishi years later of infringement. We hold, as a matter of law, that Mitsubishi properly inferred consent to its use of the invention of Wang's patents.

Id. at 1582 (relying on *De Forest Radio Tel. Co. v. United States*, 273 U.S. 236, 241 (1927)). The court noted:

> Although judicially implied licenses are rare under any doctrine, Mitsubishi proved that the "entire course of conduct" between the parties over a six-year period led Mitsubishi to infer consent to manufacture and sell the patented products.

Id. at 1581-82.

Importantly, the Federal Circuit also has made clear that the inference of license can be eroded by several factors including whether the price paid for the relevant product is more closely linked to alternative non-infringing uses than infringing uses and whether the party asserting the reasonable belief about the license was ever actually in contact with the patentee in a way that would suggest communications about a license had occurred. *See Bandag, Inc. v. Al Bolser's Tire Stores, Inc.*, 750 F.2d 903 (Fed. Cir. 1984). At the same time, the court has admonished that efforts by patentees to ward off any impression that the grant of a license should be implied will be ineffective if made *after* the purchase of the underlying products. *See Met-Coil Sys. Corp. v. Korners Unlimited, Inc.*, 803 F.2d 684 (Fed. Cir. 1986). Thus, whereas evidence of actual reasonable reliance can be essential to a claim of license under this doctrine, evidence designed to defeat reliance must have arisen at the appropriate time to support a claim of no license.

At bottom, that implied license by estoppel situations may be rare is not a reason to doubt the sense of the legal rule from cases like *Wang Labs.* It is a reflection of the sensible fact that in most high value deals the parties will negotiate adequate legal

agreements, for the benefit of all. Yet *Wang Labs* shows that the principles of equity will work as an important barrier against sharp conduct.

As with cases of laches, the particular applications of these doctrines of equitable and legal estoppel are likely to be fact-intensive, and their proper resolution necessarily requires the use of judicial discretion of the sort that the Federal Circuit applied in *Wang Labs*. But three points are worthy of notice. First, the use of the principles of discretion did not necessarily require a full trial. Some cases within the category are clear enough for judgments as a matter of law. Second, the application of estoppel principles in no way upsets the balance of strong property rights needed for commercialization, as the patentee has it always within its power to avoid the conduct that, depending on the scope of the estoppel, leads to the loss of past damages, injunctive relief, or both. Third, in some cases the extent of the reliance and the nature of the course of dealing could justify protection against injunctive relief—an issue not explicitly addressed in *Wang Labs*. Indeed, relief by estoppel may even be prospective, as in real estate cases like *Holbrook v. Taylor*, 532 S.W.2d 763 (Ky. 1976).

CONCLUSION

The longstanding first sale doctrine is a gap filling default rule. It merely implies into contracts for sale of patented products from the patentee that are otherwise silent as to license some terms that reflect the parties' actual intent, as evidenced by the facts, giving the buyer license under the patent to use the purchased products. Petitioners invite this Court

to do violence to the expressed intent of contracting parties as reflected by the facts of their actual contract terms. The first sale doctrine must not be used to directly conflict with written contract terms negotiated between commercially sophisticated parties to clearly create only a limited patent license.

Amici respectfully urge this Court to affirm the Federal Circuit's decision and confirm this Court's longstanding rule that the contractual restrictions on patent licenses like those at issue in this case generally are enforceable on their own terms as long as they comply with contract law and other applicable areas of law.

Respectfully submitted,

TROY A. PAREDES
One Brookings Drive
Campus Box 1120
St. Louis, MO 63130
(314) 935-8216

R. POLK WAGNER
3400 Chestnut Street
Philadelphia, PA 19104
(215) 898-4356

F. SCOTT KIEFF
Counsel of Record
One Brookings Drive
Campus Box 1120
St. Louis, MO 63130
(314) 935-5052
Counsel for Amici Curiae

December 10, 2007

APPENDIX

APPENDIX – LIST OF AMICI

Henry Butler, Senior Lecturer and Executive Director of the Searle Center, Northwestern University School of Law *

Lorelei Ritchie de Larena, Assistant Professor, Florida State University School of Law

Richard A. Epstein, James Parker Hall Distinguished Service Professor of Law, University of Chicago

Chris Holman, Associate Professor, UMKC School of Law

F. Scott Kieff, Professor, Washington University School of Law, and Research Fellow, Stanford University's Hoover Institution

Troy A. Paredes, Professor, Washington University School of Law

Henry E. Smith, Fred A. Johnston Professor of Property and Environmental Law, Yale University School of Law

R. Polk Wagner, Professor, University of Pennsylvania School of Law

---

* Representative organizational affiliations of all amici are provided for identification purposes only. Some amici have additional consulting or other relationships with law firms, corporations, or other organizations. In no case do the amici purport to speak for any organization, and the views expressed here should not be attributed to any organization. The views expressed here are the personal views of the amici.

56529 B

39pgs

26

No. 06-937

In the Supreme Court of the United States

QUANTA COMPUTER, INC., *ET AL.*
Petitioners,

v.

LG ELECTRONICS, INC.
Respondent.

On Writ of Certiorari to the United States Court of Appeals for the Federal Circuit

BRIEF OF *AMICUS CURIAE* YAHOO! INC. IN SUPPORT OF AFFIRMANCE OF THE FEDERAL CIRCUIT

JOSEPH K. SIINO
LISA G. MCFALL
MICHAEL CHEN LEE
YAHOO! INC.
701 First Avenue
Sunnyvale, CA 94089

ROBERT P. MERGES
U.C. BERKELEY (BOALT HALL) SCHOOL OF LAW
438 Boalt Hall
Berkeley, CA 94720

CHRISTOPHER J. WRIGHT
Counsel of Record
TIMOTHY J. SIMEONE
JOSEPH C. CAVENDER
HARRIS, WILTSHIRE & GRANNIS LLP
1200 18th Street, N.W.
Washington, DC 20036
(202) 730-1300

BEST AVAILABLE COPY

TABLE OF CONTENTS

TABLE OF AUTHORITIES iii

INTEREST OF AMICUS CURIAE 1

INTRODUCTION AND SUMMARY OF ARGUMENT 2

ARGUMENT 5

I. THE COURT SHOULD ADOPT A CLEAR RULE ON THE NARROW ISSUE IT GRANTED CERTIORARI TO RESOLVE 5

A. The issue presented is an important but narrow one, and clarity will assist businesses in negotiating the complex licensing arrangements they require..... 5

B. The Court should craft the rule in this case narrowly to address the precise question that led it to grant certiorari..... 7

II. PETITIONERS OFFER NO CONVINCING JUSTIFICATION FOR PROHIBITING PARTIES FROM MODIFYING PATENT EXHAUSTION BY AGREEMENT..... 10

III. THE FEDERAL CIRCUIT HAS ADOPTED AN ECONOMICALLY EFFICIENT RULE THAT ENCOURAGES INNOVATION..... 18

IV. THE FEDERAL CIRCUIT'S APPROACH REASONABLY RECONCILES THIS COURT'S DECISION. 20

A. The Federal Circuit's rule is consistent with patent law principles declared by this Court. 20

B. The categorical language the Court has used in describing the patent exhaustion doctrine should not be over-read 22

C. Congress has not endorsed a strict patent exhaustion doctrine 30

V. AFFIRMING THE FEDERAL CIRCUIT DOES NOT PRESENT A DANGER OF WINDFALLS TO PATENT OWNERS 31

CONCLUSION 34

TABLE OF AUTHORITIES

CASES

Page(s)

B. Braun Medical, Inc. v. Abbott Labs., 124 F.3d 1419 (1997) 21-22, 27

Bauer v. O'Donnell, 229 U.S. 1 (1913)..... 23, 26-27

Cohens v. Virginia, 19 U.S. (6 Wheat.) 264 (1821)..... 23

Continental T.V., Inc. v. GTE Sylvania Inc., 433 U.S. 36 (1977) 17

E. Bement & Sons v. Nat'l Harrow Co., 186 U.S. 70 (1902) 21

General Talking Pictures Corp. v. Western Electric Co., 305 U.S 124 (1938)..... *passim*

Henry v. A.B. Dick Co., 224 U.S. 1 (1912)..... 24, 29

Hobbie v. Jennison, 149 U.S. 355 (1893)..... 17, 21

Illinois Tool Works Inc. v. Independent Ink, Inc., 547 U.S. 28 (2006) 17, 24, 28

Jefferson Parish Hosp. Dist. No. 2 v. Hyde, 466 U.S. 2 (1984)..... 24

Leegin Creative Leather Products, Inc. v. PSKS, Inc., 127 S. Ct. 2705 (2007) 10, 17, 27

Mallinckrodt, Inc. v. Medipart, Inc., 976 F.2d 700 (Fed. Cir. 1992)..... 6, 22, 24, 28, 29

Merrill Lynch, Pierce, Fenner & Smith, Inc. v. Dabit, 547 U.S. 71 (2006) 30

Mitchell v. Hawley, 83 U.S. (16 Wall.) 544 (1873) 13, 21

Motion Picture Patents Co. v. Universal Film Mfg. Co., 243 U.S. 502 (1917)..... 20, 23, 24, 29, 30

Shelly v. Kraemer, 334 U.S. 1 (1948) 12

United States v. General Electric Co., 272 U.S. 476 (1926) 8, 20-21, 28

United States v. Univis Lens Co., 316 U.S. 241 (1942) .....*passim*

CONSTITUTION AND STATUTE

U.S. Const. Art. I, § 8..... 20

35 U.S.C. § 271..... 8

OTHER AUTHORITIES

Phillip E. Areeda & Herbert Hovenkamp, *Antitrust Law* (2d ed. 2002) 14, 24, 28

Robert H. Bork, *The Antitrust Paradox* (1978)..... 14

Mark D. Janis, *Supplemental Forms of Intellectual Property Protection for Plants*, 6 Minn. J. of L., Sci. & Tech 305 (2004)..... 6

Thomas Merrill & Henry E. Smith, *Optimal Standardization in the Law of Property: The Numerus Clausus Principle*, 110 Yale L.J. 1 (2000) 12

Glen O. Robinson, *Personal Property Servitudes*, 71 U. Chi. L. Rev. 1449 (2004) 11, 13, 14

Dep't of Justice & Fed. Trade Comm'n, *Antitrust Guidelines for the Licensing of Intellectual Property* (April 6, 1995), http://www.usdoj.gov/atr/public/guidelines/0558.pdf..... 19, 20

INTEREST OF *AMICUS CURIAE*[1]

Yahoo! Inc. ("Yahoo!") provides services to almost 500 million individuals each month worldwide and operates one of the most trafficked Internet destinations worldwide. The company is a leading innovator in the Internet, computer, and communications sectors, having developed a wide variety of patented technologies. Yahoo! owns a broad portfolio of patents relating to Internet products and services, and also licenses technology patents both to and from third parties both as standalone agreements and as parallel transactions to other negotiations. Accordingly, Yahoo!'s interest is in an efficient patent system that provides fair rewards for innovation.

This Court granted certiorari in this case to clarify the application of the patent exhaustion doctrine. In the Federal Circuit, that doctrine has evolved into a default rule, which allows sophisticated parties to choose whether a patentee will obtain its entire reward for the value of a patented article in the first sale of that article or whether it will be permitted to seek a portion of that reward from downstream parties with better information about the value of the specific rights involved. As explained below, the Federal Circuit's rule should be affirmed because the flexibility it provides is desirable both legally and economically.

---

[1] The parties have consented to the filing of this brief. No counsel for a party authored this brief in whole or in part, and no counsel or party made a monetary contribution intended to fund the preparation or submission of this brief. No person other than *amicus curiae* or its counsel made a monetary contribution to its preparation or submission.

To the extent that the parties disagree about the application of that rule to the facts of this case, Yahoo! takes no position.

Regardless of the rule adopted on that narrow issue, however, Yahoo! urges the Court to take care to maintain the undisputed, and critical, distinction between sales and licenses—only an authorized sale implicates the patent exhaustion doctrine. Additionally, the Court should ensure that, whatever its holding it does not cast doubt on the unquestioned rule that patentees may prohibit others to make unauthorized copies of patented articles, which is crucial to the legal regime governing software. As both a patentee and a licensee, Yahoo! has an interest in maintaining the stability and predictability of these established aspects of patent law.

INTRODUCTION AND SUMMARY OF ARGUMENT

This case arises from tension among some of this Court's nineteenth- and twentieth-century decisions adopting and developing the patent exhaustion doctrine. Although petitioners now contend that those cases adopt a strict rule of patent exhaustion that parties cannot modify by agreement, the petition for a writ of certiorari more accurately stated: "Unfortunately, this Court's early exhaustion cases are notoriously confusing, and this Court has not spoken to the issues for more than half a century." Pet. 7. The Federal Circuit—including in the decision on review—has interpreted this Court's cases to permit parties to modify the patent exhaustion doctrine by express agreement. This appeal poses the questions whether that rule is

better-suited to today's business environment than a strict patent exhaustion rule and whether it is a permissible reading of this Court's precedents.

Whatever result the Court reaches on those issues, Yahoo! urges a narrow focus that avoids creating uncertainty in other, settled areas of patent law. Specifically, the Court should preserve the distinction between sales and licenses. The patent exhaustion rule is triggered only by an *authorized sale*, as all parties recognize, and it is conceptually distinct from the doctrine of implied license. The patent exhaustion doctrine also has no bearing on another question of significant interest to Yahoo!: the ability of patentees to prevent *anyone*—whether purchaser or licensee—from making additional copies of a patented article. That right, established by statute, is critical for the protection of patented software technology. All agree that patent holders should be able to prohibit others from making additional copies of their patented invention except as specifically authorized, regardless of whether the patent exhaustion doctrine is applied strictly or flexibly.

On the specific issues before the Court, Yahoo! primarily desires a clear rule. So long as the rule is clear, Yahoo! and other parties will be able to enter agreements effectuating their business aims because they will know what rights they are conveying in any given negotiation. On balance, however, Yahoo! believes that the decision below should be affirmed. Absent compelling public policy considerations, sophisticated parties should be permitted wide latitude in negotiating the terms of rights transfers. There is no public policy basis on which to prohibit

bargaining around patent exhaustion in circumstances like those present here. Indeed, the fact that *both sides of this dispute and the government all agree that the result LG seeks here could lawfully be reached through licensing or contract law* unambiguously confirms that point: A strict rule of patent exhaustion serves no purpose, but functions only as a trap for the unwary and makes it more difficult for companies to negotiate the terms that they desire.

Petitioners make little effort to explain why strict patent exhaustion makes sense. Instead, they make much of the tension between the Federal Circuit's recent cases and statements in some of this Court's early patent exhaustion cases. That tension, as further discussed below, is not as great as petitioners would have the Court believe. In fact, the Federal Circuit's recent rulings are substantially reconcilable with this Court's decisions.

Finally, while Quanta and LG dispute various factual and interpretive issues relating to the parties' course of dealings, Yahoo! expresses no view on those matters or on whether the lower court's construction of the agreements in this case was correct. Rather, Yahoo!'s views are limited to cautioning that the decision in this case should be crafted to avoid confusing settled areas of law and explaining how best to resolve the specific tension that brought this case before the Court. The Court should affirm the decision below.

ARGUMENT

I. THE COURT SHOULD ADOPT A CLEAR RULE ON THE NARROW ISSUE IT GRANTED CERTIORARI TO RESOLVE.

A. The issue presented is an important but narrow one, and clarity will assist businesses in negotiating the complex licensing arrangements they require.

The issue presented by this case is an important but quite narrow one. In today's commercial environment, businesses commonly negotiate complex arrangements concerning the licensing and/or sale of intellectual property. The parties need to know the rules with certainty to be able to reach mutually beneficial agreements.[2]

If a patentee knows that his patent may lawfully be enforced against a downstream purchaser, he can charge a lower price to his immediate customer and collect an additional fee from the downstream customer or customers. Or he may choose to negotiate away his right to recover from the downstream user and attempt to recover the full

---

[2] *Amicus* Biotechnology Industry Organization explains at length the importance of such complex negotiated arrangements to that industry in its brief in support of neither party. While the self-replicating nature of DNA makes that industry's concerns somewhat distinctive, the thrust of their argument applies more broadly: the progress of science in the modern era depends greatly on collaboration among public, not-for-profit, and profit-seeking entities. Complex licensing arrangements facilitate that progress by freeing inventors to widely license their inventions, confident they will be able to recover the reward the patent law intends for them.

value of the patent from his immediate customer. *See, e.g.*, Mark D. Janis, *Supplemental Forms of Intellectual Property Protection for Plants*, 6 Minn. J. of L., Sci. & Tech 305, 327 (2004) (where a patentee places conditions on a sale of a patented product, the purchaser pays less); Pet. Br. 53 (the value of a license depends on whether the license includes the right to sell the product free and clear). In contrast, if the patentee knows that patent exhaustion insulates the downstream purchaser, he has no choice about how to structure his price—he *must* recover the entire value of his invention from his immediate customer.

At the certiorari stage, the Solicitor General correctly pointed out that there is some uncertainty as to which rule currently prevails. Under Federal Circuit cases since *Mallinckrodt, Inc. v. Medipart, Inc.*, 976 F.2d 700 (Fed. Cir. 1992), "the patent-exhaustion doctrine is subject to express modification." SG Cert. Br. 14-17. In contrast, an aggressive reading of this Court's decision in *United States v. Univis Lens Co.*, 316 U.S. 241 (1942), might suggest that the patent exhaustion rule "delimits the scope of the patent right in a manner that cannot be extended or altered by the parties." SG Cert. Br. 11.[3]

The Court granted certiorari in this case to provide clarity on that specific issue. As set forth below, Yahoo! urges this Court to take care that its decision on that issue not have broader, unintended consequences.

---

[3] The extent of this apparent conflict is further discussed in Part IV, *infra*.

B. The Court should craft the rule in this case narrowly to address the precise question that led it to grant certiorari.

Yahoo! recognizes that the issue that led this Court to grant certiorari is both discrete and narrow, and Yahoo! encourages the Court to adopt a clear rule to facilitate parties' negotiations. At the same time, however, Yahoo! urges the Court to focus its decision precisely, avoiding broad language that could call into doubt well-settled doctrines that are relied on by patentees, licensees, and purchasers throughout the Nation.

1. Yahoo! urges the Court to preserve the distinction—not questioned by any party before the Court—between a sale, which implicates the patent exhaustion doctrine (however that doctrine may be clarified in this case), and a license agreement, which does not.

Petitioners themselves emphasize the distinction between a sale and a license. *See* Pet. Br. 25-29 (distinguishing the doctrines of implied license and patent exhaustion; also distinguishing between restrictions placed on *purchasers*, which implicate patent exhaustion, and restrictions placed on manufacturing *licensees*, which do not); *see also, e.g.*, Resp. Br. 22-23 (noting that the exhaustion doctrine is "conceptually distinct" from the doctrine of implied license). Indeed, the distinction between a sale and a license is critical to petitioners' argument. While this Court granted certiorari in this case to dispel uncertainty as to whether the patent exhaustion rule should be applied strictly or flexibly in the context of an authorized sale, the doctrine of implied license contains no such uncertainty. There is no dispute

that parties can agree that no implied license will be granted. *See* Pet. Br. 26. A broad holding from this Court that could be interpreted to the contrary would sow confusion and undermine the negotiation of complex license agreements.

As petitioners also recognize, this Court should also take care not to upend more than a century of precedents by casting doubt on the right of a patentee to grant restricted rights to a manufacturing licensee, including the right to limit to whom the licensee may sell. *See* Pet. Br. 28-29, 51; *see also General Talking Pictures Corp. v. Western Electric Co.*, 305 U.S. 124, 127 (1938); *United States v. General Electric Co.*, 272 U.S. 476, 490 (1926). That question, too, is well settled and appropriately so: any change to that rule would cause enormous economic disruption in myriad manufacturing and sales licensing contexts.

2. The Court should also take care to craft a rule in this case that does not cast doubt on the undisputed right of patentees to prohibit others from making additional copies of the patented invention, a right of critical importance in the context of computer software. *See* 35 U.S.C. § 271(a) ("[W]hoever without authority makes ... any patented invention ... infringes the patent."). The parties agree that there is no dispute in this case about that right; even where patent exhaustion applies, a purchaser gains no right to make copies, unless he has a license to do so. *See* Pet. Br. 42-43 n.13; Pet. 8; Resp. Br. 20.

3. Finally, Yahoo! endorses a limit on the scope of this Court's decision already suggested by the Solicitor General. Specifically, one of respondent's

arguments here is that regardless of whether the Court adopts a strict or a flexible patent exhaustion rule, the only patents that could be "exhausted" on the facts of this case were the patents covering the *components* sold by Intel, *not* "LGE's systems patents" that are infringed "only when components ... are *combined* with other devices ... to create personal computer systems." Resp. Br. 17-35 (emphasis added). As the Solicitor General noted, however, because the Federal Circuit applied the flexible patent exhaustion rule, it did not address this argument—in other words, if there was no patent exhaustion, there was no need to decide what patent rights were or were not exhausted. SG Br. 30-31. Accordingly, the Solicitor General suggests that even if the Court reverses the Federal Circuit on the question of whether the patent exhaustion rule can be negotiated around, it should *remand* to the Federal Circuit to consider LG's argument in the first instance. *Id.* The issue, in other words, does not fall within the question presented on which certiorari was granted, and this Court should not pre-empt the Federal Circuit's consideration of the issue in the first instance.

If the Court should nonetheless reach this issue, Yahoo! urges it to endorse a narrow rule. In particular, consistent with the fact that the patent exhaustion doctrine applies only to authorized *sales*, the Court should not permit the doctrine to be extended to apply beyond the *actual things sold*. Thus, for example, when only a patented component is sold, the exhaustion doctrine should not be extended to exhaust a patentee's right to a combination of the patented component with other

components, which could be covered by separate patent claims.

II. PETITIONERS OFFER NO CONVINCING JUSTIFICATION FOR PROHIBITING PARTIES FROM MODIFYING PATENT EXHAUSTION BY AGREEMENT.

On the narrow issue before the Court, petitioners' limited efforts to justify a strict patent exhaustion doctrine as a sensible rule fall short of the mark.

First, petitioners appear at times to suggest that strict patent exhaustion is necessary to protect purchasers' reasonable expectations. *See, e.g.*, Pet. Br. 1 (arguing that patent exhaustion is "in the essential nature of things"). But that argument lacks substance: whether parties *expect* the first sale to terminate patent rights depends on the legal rule in place. Petitioners' reliance on hoary references to the common law fails to supply the missing substance. *See, e.g.*, Pet. Br. 19 ("[R]estraints upon ... alienation ... have been hateful to the law from Lord Coke's day to ours.") On this point, this Court's recent statement in *Leegin Creative Leather Products, Inc. v. PSKS, Inc.*, 127 S. Ct. 2705, 2714 (2007), applies equally here:

> [The rule against] restraint[s] on alienation [at common law] ... tended to evoke policy concerns extraneous to the question ... here. Usually associated with land, not chattels, the rule arose from restrictions removing real property from the stream of commerce for generations. The Court should be cautious about putting dispositive weight on doctrines from antiquity but of slight relevance.

In short, while expectation and tradition may explain patent exhaustion as a *default* rule, they cannot justify it as an immutable requirement.[4] It is true that, in the abstract, when one party purchases something from another he reasonably expects to be buying the right to do with the thing as he pleases. But if the parties expressly make some *other* agreement, as sophisticated businesses frequently do when negotiating license agreements, then *that* reasonable expectation should control.

Indeed, in the real world, the strict patent exhaustion rule that petitioners advocate necessarily acts *contrary* to parties' expectations. That is, the strict rule would apply when parties negotiate certain limitations on the scope of a transfer of intellectual property rights, unaware that the strict rule prohibits them from doing so. In such circumstances, the rule would nullify the limitations, defeating the parties' expectations. In contrast, the Federal Circuit's flexible rule would uphold such limitations, exactly as the parties expected. In all other situations, when the parties have not negotiated such limitations, there would be no difference between a strict and a flexible rule. Accordingly, the rule advocated by petitioners differs from the Federal Circuit's approach *only* when it

---

[4] *See also* Glen O. Robinson, *Personal Property Servitudes*, 71 U. Chi. L. Rev. 1449, 1480 (2004) ("In its formative role—as a reaction to feudal lords restricting the free alienation of property—the [free alienation] rule scarcely required explanation. But with the feudal system out of the way one might expect some explanation for refusing to allow ordinary property owners to dispose of their property on such terms as they choose.").

specifically operates to thwart the parties' expectations. While the law certainly does that from time to time, it does so only for compelling public policy reasons. *See, e.g., Shelly v. Kraemer*, 334 U.S. 1 (1948) (forbidding state courts to enforce racially restrictive covenants). No such compelling reasons have been shown here.

Petitioners also attempt to justify strict patent exhaustion on the ground that "[i]f a property owner were permitted to divvy up his [property rights] in any manner he saw fit, the property regime would become too complex and inefficient to promote the free transfer of property to its greatest use." Pet. Br. 47. In other words, petitioners claim that the patent exhaustion rule limits transaction costs in the market for property interests in patents generally. This is a variation on an argument set out in detail in an academic article cited by petitioners, *see* Thomas Merrill & Henry E. Smith, *Optimal Standardization in the Law of Property: The Numerus Clausus Principle*, 110 Yale L.J. 1 (2000). But the argument is not persuasive. Merrill and Smith use a "timeshare" in a wristwatch as an example of a property interest that the law should forbid notwithstanding the parties' desire to transfer such an interest. According to the authors, such idiosyncratic interests increase "the information processing costs of all persons who have existing or potential interests in this type of property." *Id.* at 27. In other words, an externality is created because market actors incur information costs to ensure that they are receiving the full property rights they expect.

What Merrill & Smith's argument actually demonstrates, however, is that the market is generally self-regulating. In reality, watchmakers could not sell timeshares in a watch because nobody would want one. *See* Robinson, 71 U. Chi. L. Rev. at 1486. There is thus no need for a legal prohibition. But even if such an idiosyncratic interest were to encounter demand, "what [Merrill & Smith] overlook is that if every buyer must be given specific notice of any deviation for the baseline of full title transfer, the information cost problem is solved; there is no externality." *Id.* at 1486-87. "A legally required notice has the same effect of internalizing information costs as a legal guarantee of formal title." *Id.* at 1487. That is precisely what takes place under the Federal Circuit rule at issue here: sophisticated parties negotiate *express* "notice" of the property interest to be transferred in derogation of the flexible patent exhaustion default rule. Accordingly, there is no transaction costs problem.

Furthermore, it is difficult to see how the regime that petitioners advocate does a better job of limiting transaction costs than the Federal Circuit's approach. After all, petitioners, respondents, and the Solicitor General all agree that there are alternate ways, under either patent or contract law, to achieve the result that LG sought here. For example, it is undisputed that LG could have *licensed* Intel to make, but not to sell, technology embodying its technology: "Among the restrictions on licensees that the Court has allowed to be enforced through an infringement action is a restriction on a licensee's ability to make an authorized sale." SG Cert. Br. 13 (citing *Mitchell v. Hawley*, 83 U.S. (16 Wall.) 544 (1873)); *see also* Pet. Br. 51. It is similarly

undisputed that LG could have achieved its desired result here through a "complex ... web of contractual obligations." Pet. Br. 51. Accordingly, the strict patent rule advocated by petitioners is little more than a trap for the unwary—since the same result may lawfully be reached in different ways, the rule serves no social purpose. *See* Robinson, 71 U. Chi. L. Rev. at 1468. Petitioners' rule, which would force parties to find the right "magic words" to negotiate around this trap and effectuate their intent, imposes, rather than saves, transaction costs. That trap becomes even more costly to those who try, but fail, to avoid it.

Petitioners' *amicus* Dell argued at the certiorari stage that the Federal Circuit rule lets patent owners "multiply" their recovery by "extracting a new, duplicative royalty at each stage of ownership." Dell Cert. Br. 13-15. As petitioners note, however, "[t]here is only one monopoly profit to be obtained in any vertical distribution chain." Pet. Br. 49; *see also* Dell Br. 13 n.7 (agreeing with the same); 3A Phillip E. Areeda & Herbert Hovenkamp, *Antitrust Law* ¶ 756b2 (2d ed. 2002); Robert H. Bork, *The Antitrust Paradox* 229 (1978). There is no reason to think that patent owners can "multiply" that profit by dividing it up. If a smaller portion of the bundle of rights is to be conveyed in the first sale, the market will naturally assign a lower price.

Dell suggests that a patentee can nevertheless act strategically to reap excessive (*i.e.*, inefficiently large) royalties by waiting to assert its claim until after those in a supply chain have designed their products incorporating the patented technology. *See* Dell Br. 15-16. While Yahoo! agrees that the law

should not promote that sort of opportunistic behavior, no rule adopted in this case could prevent it. It is undisputed that a patentee, whether or not it is acting strategically, need not provide an unrestricted license to sell to anyone in the supply chain. *See supra* at 13-14; Pet. Br. 51. If a patentee opts not to do so, any sale to an unlicensed entity would be unauthorized, and the patent exhaustion rule—strict or flexible—would simply not apply. *See supra* at 13-14; *General Talking Pictures Corp.*, 305 U.S. at 127. In that situation, the patentee could enforce his patent rights against all downstream entities in supply chain, all of whom would be infringers. The rule adopted in this case has no bearing on whether such conduct would be profitable.

Dell also posits an additional source of transaction costs, suggesting that a flexible rule creates an information problem: downstream users might not be able to learn what upstream users paid. *See* Dell Cert. Br. 12. As an economic matter, however, downstream users do not need to know what upstream users paid. They only need to know for certain what rights *they* are being offered to determine what those rights are worth to them. That is simply how markets work: a consumer need not know what Walmart paid Dell for a computer to know whether he wishes to purchase the computer at Walmart's asking price. The same is true for more sophisticated buyers.

Indeed, what Dell offers as a selling point for a strict patent exhaustion rule is its primary flaw—it "forces the patent owner to extract the entire royalty that is due for its invention at a single point." *Id.* That is not an economically sensible regime. LG and

Intel are unlikely to have as good information about the value of those rights to downstream users as the downstream users do. This is particularly true with new technologies, which, in some cases, can be difficult to value accurately. The Federal Circuit's approach allows those with the best information about value to be the ones to negotiate prices for the intellectual property rights they need.

Of course, under the Federal Circuit's rule, if LG and Intel *want* to include in the price LG charges Intel the value that others will derive downstream from combining Intel offerings (containing LG technology) into their own products, they can. But LG should not be *required* to estimate the total downstream value of its patents and collect the entire royalty from Intel. Likewise, Intel should be free to pay only its portion of the royalties and not act as an agent of LG by attempting to estimate the downstream value of its products. Where it would be inefficient for multiple negotiations to take place—in situations, for example, involving numerous parties, little variation in use, and predictable value—one might expect parties to negotiate a full royalty at the first level. But it makes sense to leave that up to them.

Finally, petitioners make the surprising claim that "the Federal Circuit's holding threatens to immunize patent owners for conduct that violates the antitrust law." Pet. Br. 50. That is simply wrong. As discussed *supra* at 14, there is only one monopoly profit to be made on the sale of an invention, and the whole point of patent law is to entitle the patent holder to that profit. Antitrust law is indifferent as to whether the patent holder must collect that entire

monopoly profit from the first sale *or* may seek it in a series of transactions—which is the real question presented here.

On the other hand, patent law does *not* entitle the patent holder to anything *more* than the lone monopoly profit to be made on the sale of his invention. And antitrust law is *not* indifferent to a patentee's attempts to multiply that profit. So, for example, it is impermissible to exploit market power in the market for one product (the "tying" product) by conditioning sales of that product on the purchase of a second product (the "tied" product), and the fact that the seller has a lawful monopoly under the patent law in the tying market provides him no shield. *See Illinois Tool Works Inc. v. Independent Ink, Inc.*, 547 U.S. 28, 38-43 (2006) (plaintiff must show that the patentee has market power in the tying product to establish a Sherman Act violation; the same requirement applies to show patent misuse). That fact will not change regardless of the rule adopted in this case. Nor may a patentee somehow invoke a patent to insulate from liability a "cartel," Pet. Br. 51, engaged in horizontal price fixing. A patentee *may*, of course, engage in *vertical* resale price maintenance consistent with the "rule of reason," but so may any manufacturer. Under this Court's recent decision in *Leegin*, 127 S. Ct. 2705, that is simply the law.[5]

---

[5] Similarly, the antitrust laws do not prohibit "exclusive territories restrictions." Pet. Br. 51; *see Hobbie v. Jennison*, 149 U.S. 355, 363 (1893) (noting that patentees may lawfully "bind every licensee or assignee" to such restrictions); *Continental T.V. Inc. v. GTE Sylvania Inc.*, 433 U.S. 36 (1977) (holding that non-price restrictions on distribution, including territorial

In sum, the rule advanced by petitioners is deficient because it would limit the ability of sophisticated business entities, such as patent holders and their assigns, from entering into mutually beneficial business arrangements.

III. THE FEDERAL CIRCUIT HAS ADOPTED AN ECONOMICALLY EFFICIENT RULE THAT ENCOURAGES INNOVATION.

While the absence of any compelling justification for the restrictive rule that petitioners advocate is a sufficient basis on which to reject it, there are important benefits to the Federal Circuit's approach. While most of those benefits are implicit in the discussion above, they bear brief express mention.

First, permitting parties to bargain around patent exhaustion would obviously respect the parties' preferences. As noted *supra* at 10-12, while petitioners suggest that a strict rule is necessary to protect parties' expectations, that is flatly incorrect. The strict rule applies *only* to thwart the parties' expectations. *Supra* at 11-12.

Second, the Federal Circuit's rule is economically efficient because it allows parties with the best information about value to be the ones to negotiate prices for the intellectual property rights they need. Dell argues that strict patent exhaustion is a good rule because it "forces the patent owner to extract the entire royalty that is due for its invention at a single point." Dell Cert. Br. 12. But "forcing" parties

---

restrictions, are governed by the rule of reason). For purposes of antitrust law, it is thus neither here nor there whether such restrictions are imposed as a matter of patent or contract law.

to do things is rarely economically efficient. Efficiency is advanced by allowing parties to determine for themselves who is best situated to value specific property rights. In general, a downstream user will, of course, have a better idea of what specific rights are worth *to him* than will some other user upstream.

Finally, the Federal Circuit's rule is economically efficient for a reason not yet discussed. Specifically, allowing parties to bargain around patent exhaustion facilitates socially valuable price discrimination. For example, LG might sell at a different price to Quanta than it does to Company X, which intends to use the technology for a different (lower value) use. Company X thereby benefits, because it otherwise would not be able to buy at all since its use is not valuable enough to justify licensing the invention at the market-wide monopoly price. Consumers benefit in turn because they can buy Company X's product. And finally, patentee LG benefits because it is able to make additional sales.

The Department of Justice acknowledges that using license restrictions for price discrimination promotes innovation. *See* Dep't of Justice & Fed. Trade Comm'n, *Antitrust Guidelines for the Licensing of Intellectual Property* (Apr. 6, 1995), http://www.usdoj.gov/atr/public/guidelines/0558.pdf. Specifically, the Guidelines indicate that use restrictions on intellectual property "may serve procompetitive ends by allowing the licensor to exploit its property as efficiently and effectively as possible," including giving "licensee[s] an incentive to invest in the commercialization and distribution of products embodying the licensed intellectual

property and to develop additional applications for the licensed property." *Id.* § 2.3. Price discrimination also, of course, increases potential rewards to patentees, which encourages further innovation.

IV. THE FEDERAL CIRCUIT'S APPROACH REASONABLY RECONCILES THIS COURT'S DECISIONS.

The United States is correct, to a point, in identifying "dissonance" between language in some early Supreme Court patent cases and the development of the patent exhaustion doctrine in the Federal Circuit. SG Cert. Br. 18. But the degree of that tension should not be overstated. In fact, the Federal Circuit's approach is largely consistent with the principles animating this Court's patent exhaustion decisions, even if it is inconsistent with the language in some cases.

A. The Federal Circuit's rule is consistent with patent law principles declared by this Court.

The monopoly provided to a patentee, as this Court has repeatedly confirmed, is designed to reward an inventor for his invention. *Univis*, 316 U.S. at 250; *Motion Picture Patents Co. v. Universal Film Mfg. Co.*, 243 U.S. 502, 511 (1917) (citing cases). This reward is not provided because the nation is proud of its inventors but rather out of the recognition that allowing inventors to reap the benefits of their inventions "promote[s] the Progress of Science and useful Arts." U.S. Const. Art. I § 8. Thus, the Court has said that a patentee's restrictions upon a licensee's sales are valid "provided the conditions of sale are normally and

reasonably adapted to secure pecuniary reward for the patentee's monopoly." *General Electric*, 272 U.S. at 490. Put another way, "'the rule is, with few exceptions, that any conditions which are not in their very nature illegal with regard to this kind of property, imposed by the patentee and agreed to by the licensee for the right to manufacture or use or sell the article, will be upheld.'" *Id.* at 491 (quoting *E. Bement & Sons v. Nat'l Harrow Co.*, 186 U.S. 70, 91 (1902)).

Consistent with these general principles, the Court has allowed patentees flexibility in how they choose to structure their license agreements to deliver the monopolist's reward to the patentee. For example, a patentee might choose to license to others the right to sell his invention without restriction to all comers. Alternatively, he may grant a less valuable license, such as a license to sell only in a certain area, or to a certain kind of customer, or to sell the invention with the caveat that the license to use it under the patent expires on a date certain. *See Hobbie v. Jennison*, 149 U.S. 355 (1893) (territorial restrictions on licensee's right to sell); *General Talking Pictures*, 305 U.S. 124 (licenses divided between those who could sell for commercial purposes and those who could sell for home purposes); *Mitchell*, 83 U.S. 544 (purchaser from a licensee infringes if he continues to use the purchased invention after the date the licensee's right to license use expired).

The Federal Circuit's development of the patent exhaustion doctrine reflects these principles. In the Federal Circuit's view, patent exhaustion operates as a default rule. Thus, "an unconditional sale of a

patented device exhausts the patentee's right to control the purchaser's use of the device thereafter." *B. Braun Medical, Inc. v. Abbott Labs.*, 124 F.3d 1419, 1426 (1997) (citing *Mallinckrodt*, 976 F.2d at 706). "The theory behind this rule is that in such a transaction, the patentee has bargained for, and received, an amount equal to the full value of the goods." *Braun Medical*, 124 F.3d at 1426 (citations omitted). But where a patentee has expressly limited a licensee's rights, "it is more reasonable to infer that the parties negotiated a price that reflects only the value of the 'use' rights conferred by the patentee." *Id.* (citations omitted). The patentee, under the Federal Circuit's approach, is entitled to take full advantage of the monopoly rights secured by the patent grant, and both he and his licensee should be entitled to enter into whatever licensing agreement they see fit. *Mallinckrodt*, 976 F.2d at 708 (noting that there are exceptions for agreements that constitute misuse or violate the antitrust laws). Thus, the restrictions the parties negotiate are generally upheld. *Braun Medical*, 124 F.3d at 1426 (citing, *inter alia*, *General Talking Pictures*, 305 U.S. at 127).

B. The categorical language the Court has used in describing the patent exhaustion doctrine should not be over-read.

In contrast to the Federal Circuit's approach, this Court has not described the patent exhaustion rule as a default rule. Instead, the Court's language in describing patent exhaustion has tended to be categorical. For example, in *Univis*, the Court said: "The full extent of the [patent] monopoly is the patentee's 'exclusive right to make, use, and vend the

invention or discovery' .... [S]ale of [a patented article] exhausts the monopoly in that article and the patentee may not thereafter, by virtue of his patent, control the use or disposition of the article." 316 U.S. at 250. In a similar vein, the Court in *Motion Picture Patents* stated that "the right to vend is exhausted by a single, unconditional sale, the article sold being thereby carried outside the monopoly of the patent law and rendered free of every restriction which the vendor may attempt to put upon it." *Motion Picture Patents*, 243 U.S. at 516 (citing *Bauer v. O'Donnell*, 229 U.S. 1 (1913)).

Although such broad language is at odds with the Federal Circuit's rule that the patent exhaustion doctrine operates as a default rule that can be modified by agreement of the parties, it should not be over-read. "It is a maxim not to be disregarded, that general expressions, in every opinion, are to be taken in connection with the case in which those expressions are used." *Cohens v. Virginia*, 19 U.S. (6 Wheat.) 264, 399 (1821). That admonition is especially applicable here, in an area of law awash in broad statements that cannot be easily reconciled.

Thus *Motion Picture Patents*, notwithstanding its broad language, was not thought to present an obstacle when the Court upheld the restriction at issue in *General Talking Pictures*. In that case, the patentee granted some companies licenses to sell its amplifiers in the consumer market for home use and other companies licenses to sell for the commercial market. *General Talking Pictures*, 305 U.S. at 125-26. A commercial buyer, knowing of the license restrictions, bought from a company that was entitled only to sell in the home market. The Court

held that the buyer acquired no license at all when it purchased the amplifier; instead, it was an infringer. *Id.* at 127. What made the sale unauthorized, and thus made the buyer an infringer, was precisely the fact that the buyer did not intend to conform his use to the use permitted by the seller's license.

This holding, as the dissent pointed out, was inconsistent with the discussion in the *Motion Picture Patents* case, which seemed to forbid a patentee from imposing *any* restrictions on a purchaser's use. *Id.* at 128-29 & n.3 (Black, J., dissenting). But *Motion Picture Patents* is better understood as a case about patent misuse and product tying rather than a case about restraints under the patent law generally. *See Illinois Tool Works*, 547 U.S. at 33-34 & n.2 (identifying *Motion Picture Patents* as a case condemning product tying as patent misuse). *See also, e.g.*, 9 Areeda & Hovenkamp, *Antitrust Law*, ¶¶ 1701b, 1720; *Mallinckrodt*, 976 F.2d at 708; *Motion Picture Patents*, 243 U.S. at 517 (the fact that the patentee makes its profit from the sale of supplies rather than the sale of the invention "is the clearest possible condemnation" of the scheme because it has the effect of extending the scope of the patent monopoly); *Jefferson Parish Hosp. Dist. No. 2 v. Hyde*, 466 U.S. 2, 9 n.13 (tracing the antitrust rule of tying to *Motion Picture Patents*).

Indeed, that is why the Court in *Motion Picture Patents* overruled *Henry v. A.B. Dick Co.*, 224 U.S. 1 (1912), in which the Court had upheld a tying restriction, but did not so much as criticize or distinguish any of the other cases upholding other sorts of restrictions. Since there was no tie involved

in *General Talking Pictures*, *Motion Picture Patents* was simply not applicable. Rather, other cases, such as *Mitchell* and *General Electric*, which had permitted other kinds of restraints using equally broad language, controlled. That is also why the Court's opinion in *General Talking Pictures* was remarkably short—a single paragraph disposed of the legal issue, which was "clear," as the practice at issue was "an old one" whose "legality has never been questioned." 305 U.S. at 127.[6]

Like the broad language in *Motion Picture Patents*, the broad language of *Univis* should be read cautiously. It is far from clear that *Univis* in fact condemns the kind of licensing practices approved by the Federal Circuit's recent cases.

In *Univis*, the patentee imposed a resale price maintenance scheme through its licensing practices. The company held several patents relating to multifocal lenses. The patentee's subsidiary manufactured lens blanks, which it sold to two kinds of customers, wholesalers and "finishing retailers." *Univis*, 316 U.S. at 244. Finishing retailers would grind the lens blanks and then sell the lenses to consumers. So-called prescription retailers, lacking the capability to finish the lenses, would purchase

---

[6] The United States argued at the cer iorari stage that the holding in *General Talking Pictures* creates an "anomaly" that a use restriction can be imposed upon a patented article through a license while no restrictions at all can be placed on an article sold to a purchaser. SG Cert. Br. 14. It is, of course, only an anomaly if one believes that this Court's broad statements in cases like *Motion Picture Patents* should control, instead of equally broad statements made in other cases, such as *General Electric*, that would suggest such restrictions may be imposed.

lenses from wholesalers who would grind the lenses for them. The lens company licensed all three types of entities—wholesalers, finishing retailers, and prescription retailers. *Id.* As part of their licenses, all agreed to maintain certain resale prices set by the patentee. *Id.* at 244-45. But no matter whether the manufacturer sold a lens blank to a finishing retailer or to a wholesaler (later to be sold to a prescription retailer), the patentee was paid the same amount—50 cents, payable from the proceeds of that initial sale by the manufacturer. *Id.* at 245.

In *Univis*, it was important that the licensing scheme purported to restrict prices even *after* the point where the patentee received its part of the proceeds of the sale. As the Court put it, "the *entire* consideration and compensation" paid to the manufacturer was the purchase price of the finishing licensee, from which the manufacturer paid the patentee's royalty. *Id.* at 249 (emphasis added). The Court pointed out that "[w]e have no question here of what other stipulations, *for royalties or otherwise*, might have been exacted as a part of the entire transaction." *Id.* at 250 (emphasis added). The Court rejected the price restrictions, explaining that "the purpose of the patent law is fulfilled ... when the patentee *has received his reward for the use of his invention* ... and that *once that purpose is realized* the patent law affords no basis for restraining the use and enjoyment of the thing sold." *Id.* at 251 (emphasis added). In the Court's view, the patentee could legitimately dictate only the price of the transaction from which it took its cut; because the subsequent transactions did not provide further compensation to the patentee, the restriction on them was not within the patent grant. *See also*

Bauer, 229 U.S. at 16-17 (emphasizing, in striking down a resale price maintenance system, that the patentee did not receive any payments out of the proceeds of the price-restricted subsequent sales).

In contrast to *Univis*, the Federal Circuit's rule does not concern efforts to control prices unrelated to the patentee's reward. Rather, it is directed to situations where a patentee who grants less than full rights to his manufacturing licensee (expecting to then grant further licenses to those who incorporate that invention into other products) has *not* gotten "the entire consideration and compensation" that he intends to get from the invention. *Compare Univis*, 316 U.S. at 249 *with Braun Medical*, 124 F.3d at 1426. A further license issued to a downstream manufacturer like Quanta would—unlike the situation in *Univis*—provide a reward to the patent holder; the Court's reasoning in *Univis* is thus not directly applicable.[7]

All of this is not, of course, to say that there is perfect harmony between all statements in this Court's cases and those of the Federal Circuit. Rather, the important point is that there is considerable tension in the Court's *own* precedents.

---

[7] The Court has also changed its view of resale price maintenance since *Univis*. *See Leegin*, 127 S. Ct. 2705. Today, resale price maintenance is permitted because it encourages non-price competition among retailers as they attempt to sell more of the goods (such as encouraging them to provide more knowledgeable salespeople or to otherwise highlight the desirability of the manufacturer's products). This in turn can lead both to higher profits for the manufacturer and to higher consumer welfare. Thus, resale price maintenance can be one way in which a patentee maximizes the value of his patent.

No case has overruled *General Talking Pictures* or *Mitchell*, both of which upheld under patent law restrictions against purchasers who knew of them when they bought the patented articles.[8] Even *Univis*—arguably petitioner's best case—expressly declined the Government's invitation to reconsider *General Electric*. *Univis*, 316 U.S. at 252. Moreover, no case from this Court has even hinted at disapproving the broad language of *General Electric*—quoted approvingly in *General Talking Pictures*—that a "patentee may grant a license 'upon *any* condition the performance of which is reasonably within the reward which the patentee by the grant of the patent is entitled to secure.'" *General Talking Pictures*, 305 U.S. at 127 (quoting *General Electric*, 272 U.S. at 489) (emphasis added).

This tension in the Court's cases, *cf. Mallinckrodt*, 976 F.2d at 705 (noting that the district court had believed *General Talking Pictures* to be in tension with cases like *Motion Picture Patents*), may be reconciled in either of two ways. One could read the precedents as establishing a purely formalistic distinction between patent exhaustion cases on the one hand and restricted-license cases on the other. *See* SG Cert. Br. at 14. Such a reading creates the "anomaly" of allowing a patentee to achieve indirectly through license restrictions what it cannot achieve directly. *Id.* Alternatively, one could reject "formalistic

---

[8] Petitioners make much of the fact that *Dick* was overruled but, as discussed above, *Dick* was a tying case and so was the case (*Motion Picture Patents*) overruling it. *See Illinois Tool Works*, 547 U.S. at 34 & n.2; 9 Areeda & Hovenkamp, *Antitrust Law*, ¶¶ 1701b, 1720.

distinctions of no economic consequence" and read the broad language in cases like *Motion Picture Patents* more narrowly, as applying to the kinds of restrictions at issue in those cases. *See Mallinckrodt*, 976 F.2d at 705, 708 & n.8.[9] The Federal Circuit chose the latter path. *See id.* at 703-08.

In these circumstances, the tension between isolated statements in this Court's cases and the Federal Circuit's patent exhaustion cases should not be overstated. The Federal Circuit was well aware of this Court's patent exhaustion cases when it decided *Mallinckrodt*. *See id.* In that case, the court reasonably applied this Court's precedents to new circumstances. As discussed above, that evolution is not only largely consistent with the principles this Court has declared but is also the more economically sensible approach. This Court should endorse the Federal Circuit's approach notwithstanding its inconsistency with the language in some of this Court's cases.[10]

---

[9] Justice Holmes in *Motion Picture Patents* foresaw this issue, arguing that a patentee should be free to impose restrictions on the use of his patented invention except where the public interest forbids them. 243 U.S. at 519-20 (Holmes, J., dissenting). Justice Holmes thus understood that the real question is whether a restriction should be condemned on its own merits. The fact that *Motion Picture Patents* is now seen as a tying case confirms that Justice Holmes was correct.

[10] Petitioners also suggest that when this Court in *Mitchell* discussed the right of patentees to place conditions on sales, it understood the term "condition" only to refer to conditions precedent to the passing of title. *See* Pet. Br. 18-20 & n.7. This Court considered and rejected that argument almost a century ago. *See Dick*, 224 U.S. at 17-24 (overruled on other grounds by *Motion Picture Patents*, 243 U.S. at 518). When the *Dick* case

C. Congress has not endorsed a strict patent exhaustion doctrine.

Petitioners argue that the Federal Circuit's approach should be rejected because Congress, despite having reenacted the patent laws, did not see fit to modify this Court's patent exhaustion doctrine. Pet. Br. 45. While re-using language in a reenacted statute frequently indicates an intent to incorporate prior judicial interpretations of that language, *see Merrill Lynch, Pierce, Fenner & Smith, Inc. v. Dabit*, 547 U.S. 71, 85 (2006), that rule is of course merely a guide to the interpretation of a statute. There are several reasons to believe that the rule should not apply to this case.

First, as all parties agree, it has always been the case that patentees and their licensees could get around the effects of the strict patent exhaustion doctrine through artful drafting of their license agreements and contracts. *See supra* at 13-14. In this sense, the patent exhaustion doctrine has, in truth, always been a mere default rule. Congress, to the extent it approved of the patent exhaustion doctrine, likewise should be understood to have approved that the rule could be drafted around.

Second, as discussed in Part IV.B above, there is tension in this Court's own cases dealing with patent exhaustion and license restrictions. In light of that tension, it is at least an open question whether Congress specifically approved petitioners' view of

---

was overruled, the issue was whether tying conditions could lawfully be imposed or whether they expanded the scope of the patent monopoly, not the meaning of the word "conditions." *See Motion Picture Patents*, 243 U.S. at 509-13.

how to reconcile the cases, rather than the more practical approach taken by the Federal Circuit in *Mallinckrodt*.

Third, despite different outcomes in specific cases, this Court has always interpreted the patent law as a mechanism to encourage the advancement of science by allowing a patentee to benefit from the monopoly in his invention. *See, e.g.*, *Univis*, 316 U.S. at 250. Over time, the Court's understanding of the economics of that mechanism has, of course, evolved. There is no reason to think that Congress endorsed this Court's early twentieth-century pronouncements at the cost of keeping that evolution from improving the patent law. Rather, Congress more plausibly expected that courts would continue to interpret the patent law, including the patent exhaustion doctrine, to permit patentees to negotiate a fair reward for their inventions. This Court should interpret its precedents accordingly.

V. Affirming the Federal Circuit Does Not Present a Danger of Windfalls to Patent Owners.

Petitioners argue that LG—although it inarguably could have imposed its desired conditions through other means—is attempting to take advantage of confusion in the law "to extract a one-time windfall" in this case. Pet. Br. at 52-53. Others go further, conjuring images of thousands of patents involved in countless lawsuits with scarcely imaginable amounts of liability on the line if the Federal Circuit's rule is affirmed. *See* Dell Cert. Br. at 13-14. Such concerns about windfalls to patent owners resulting from affirmance in this case are grossly overstated.

While Yahoo! takes no position on the Federal Circuit's interpretation of the facts in this case, as a logical matter it would appear that whether LG could receive an undeserved "windfall" depends on LG's and Intel's understanding of the background rule in place when they negotiated their licensing agreement. That is, if the parties believed that LG would *not* be able to recover from downstream entities like Quanta, the parties would have negotiated a price conferring on Intel the valuable right to sell LG's invention to others who could incorporate that invention into their products. If that is what they did and LG is nonetheless allowed to recover from downstream users, it will indeed receive a "one-time windfall" in this case. If, on the other hand, the parties believed that the patent exhaustion doctrine was merely a default rule and that LG could impose restrictions on downstream entities like Quanta, then the right Intel obtained was less valuable and Intel would have paid less for it—as Quanta understands. *See* Pet. Br. 49-50, 53. In that case, it is Quanta that could receive an undeserved windfall at LG's expense if this Court endorses the strict patent exhaustion rule.[11]

Yahoo! does not know the parties' understanding of the state of the law at the time of their negotiations. As a general matter, however, sophisticated parties negotiating such agreements

---

[11] The potential for a windfall for downstream entities if the Court adopts a strict rule is perhaps even greater. Downstream entities that obtained licenses under the belief that the flexible rule applied might argue that they were free to disregard those agreements, claiming that they had no need of a license, thus obtaining windfalls at the expense of their licensors.

could reasonably have believed that *Mallinckdrodt* established the flexible patent exhaustion as the background rule. Petitioners implicitly acknowledge that fact, because their arguments attack *Mallinckrodt*. *See, e.g.*, Pet. Br. 12-13 (criticizing the *Mallinckrodt* rule and citing journal analyses critical of the *Mallinckrodt* decision); *see also* SG Cert. Br. 14 (identifying *Mallinckrodt* as the "foundation" of the Federal Circuit's approach). Indeed, the Federal Circuit decision below indicates that it certainly thought *Mallinckdrodt* settled this issue. *See* Pet. App. 4a-5a. In short, sophisticated parties negotiating licenses at the time this case arose may well have believed that *Mallinckrodt* stated the applicable law, notwithstanding language in cases from a half-century earlier that is arguably inconsistent with *Mallinckrodt*.

At the same time, we cannot rule out that parties may have held the contrary view. In these circumstances, however, the "windfall" point should not prevent the Court from upholding the Federal Circuit's development of a flexible patent exhaustion doctrine because it is both legally and economically desirable. After this Court makes clear that the patent exhaustion rule is a default rule, so that parties may agree to restrictions on the rights transferred by a license, neither patentees nor licensees should be able to obtain windfalls.

CONCLUSION

This Court should endorse a flexible patent exhaustion rule. However, if this Court announces a strict rule, it should limit its decision carefully. The Court should not reach issues on which the parties agree, such as the distinction between a sale and a license, or the right of a patentee to prohibit the making of unauthorized copies of his invention. In addition, the Court should not extend the reach of the patent exhaustion rule. In particular, the Court should not extend the patent exhaustion rule to apply to any patent claims other than those covering only the actual article sold—not to combinations or to other components that might be used in combination with it. Such an extension of the patent exhaustion rule, even if it were desirable, should be first considered by the Federal Circuit.

The judgment of the Federal Circuit should be affirmed.

Respectfully submitted.

JOSEPH K. SIINO
LISA G. MCFALL
MICHAEL CHEN LEE
YAHOO! INC.
701 First Avenue
Sunnyvale, CA 94089

ROBERT P. MERGES
U.C. BERKELEY (BOALT HALL) SCHOOL OF LAW
438 Boalt Hall
Berkeley, CA 94720

CHRISTOPHER J. WRIGHT
Counsel of Record
TIMOTHY J. SIMEONE
JOSEPH C. CAVENDER
HARRIS, WILTSHIRE & GRANNIS LLP
1200 18th Street, N.W.
Washington, DC 20036
(202) 730-1300

December 10, 2007

56536 I
39pp

30

No. 06-937

FILED

DEC 10 200:

OFFICE OF THE CLERK
SUPREME COURT, U.S.

IN THE

Supreme Court of the United States

QUANTA COMPUTER, INC., QUANTA COMPUTER USA, INC., Q-LITY COMPUTER, INC.,
Petitioners,

v.

LG ELECTRONICS, INC.,
Respondent.

On Writ of Certiorari to the United States Court of Appeals for the Federal Circuit

BRIEF FOR WI-LAN INC. AS *AMICUS CURIAE* SUPPORTING RESPONDENT

ROBERT E. GOODFRIEND
Counsel of Record
JASON BLACKSTONE
MCKOOL SMITH, P.C.
300 Crescent Court
Suite 1500
Dallas, Texas 75201
(214) 978-4000

ROBERT COTE
MCKOOL SMITH, P.C.
399 Park Avenue
New York, New York 10022
(212) 402-9400

RODNEY R. SWEETLAND, III
MICHAEL G. MCMANUS
MCKOOL SMITH, P.C.
1025 Connecticut Avenue NW
Suite 1000
Washington DC 20036
(202) 828-1272

JAMES N. WILLI
JOEL L. THOLLANDER
GRETCHEN K. HARTING
SETH R. HASENOUR
MCKOOL SMITH, P.C.
300 West 6th Street
Suite 1700
Austin, Texas 78701
(512) 692-8700

Counsel for Wi-LAN Inc.

WILSON-EPES PRINTING CO., INC. – (202) 789-0096 – WASHINGTON, D. C. 20002

BEST AVAILABLE COPY

TABLE OF CONTENTS

TABLE OF CONTENTS i

TABLE OF AUTHORITIES iii

IDENTITY AND INTEREST OF THE *AMICUS CURIAE* 1

SUMMARY OF THE ARGUMENT 3

ARGUMENT 5

I. CONDITIONS ON THE SALE OF PATENTED ARTICLES AND THE LICENSE OF PATENT RIGHTS HAVE CONSISTENTLY BEEN UPHELD BY THE COURT 5

A. This Court And The Regional Circuits, Prior To The Creation Of The Federal Circuit, Have Consistently Upheld Such Conditions 5

B. *Mallinckrodt* And This Case Are Conceptually Distinguishable From *Univis* 13

II. THE COURT SHOULD CONTINUE TO GIVE FULL EFFECT TO ITS DECISIONS PERMITTING CONDITIONS ON THE SALE OF PATENTED ARTICLES AND THE LICENSE OF PATENT RIGHTS 17

A. Well-Settled Legal Principles Permitting Conditions Should Remain Undisturbed 17

B. A *Per Se* Patent Exhaustion Rule Would Be In Direct Conflict With 35 U.S.C. § 271(d)(5) 20

C. Public Policy Considerations Militate Against A *Per Se* Rule 22

1. The Single Recovery Rule Prevents Abuse of Patent Rights 24

2. Treating Licenses Differently From Releases Of Liability Creates An Anomaly And An Obstacle To Settlement 25

3. Petitioners' Policy Justifications For *Per Se* Exhaustion Lack Merit 26

CONCLUSION 29

TABLE OF AUTHORITIES

CASES **Page**

Albright v. Teas,
106 U.S. 613 (1883) 9

Aro Mfg. Co. v. Convertible Top Replacement Co.,
377 U.S. 476 (1964) 23, 24

Automatic Radio Mfg. Co. v. Hazeltine Research, Inc.,
176 F.2d 799 (1st Cir. 1949) 12

Bandag, Inc. v. Al Bolser's Tire Stores, Inc.,
750 F.2d 903 (Fed. Cir. 1984) 28

Bement v. Nat'l Harrow Co.,
186 U.S. 70 (1902) 18

Bloomer v. Millinger,
68 U.S. 340 (1864) 19

Bus. Elecs. Corp. v. Sharp Elecs. Corp.,
485 U.S. 717 (1988) 23

Chiuminatta Concrete Concepts, Inc. v. Cardinal Indus.,
1 Fed. Appx. 879, 885 (Fed. Cir 2001) 25

Coats Loaders & Stackers, Inc. v. Henderson,
233 F.2d 915 (6th Cir. 1956) 13

Page

Extractol Process, Ltd. v. Hiram Walker & Sons, Inc.,
153 F.2d 264 (7th Cir. 1946) 11, 12

Gen. Talking Pictures Corp. v. W. Elec. Co.,
304 U.S. 175 (1938) 8, 9, 10, 11, 12, 13
14, 15, 16, 18, 30

Gen. Talking Pictures Corp. v. W. Elec. Co.,
305 U.S. 126 (1938) 7, 9, 10, 14, 18
19, 30

Hilton v. S.C. Pub. Rys. Comm'n,
502 U.S. 197 (1991) 17

Ill. Tool Works Inc. v. Independent Ink, Inc.,
547 U.S. 28 (2006) 10, 21

In re Yarn Processing Patent Validity Litig.,
541 F.2d 1127 (5th Cir. 1976) 13, 14, 16

Int'l Gamco, Inc. v. Multimedia Games, Inc.,
504 F.3d 1273 (Fed. Cir. 2007)..... 16

Leegin Creative Leather Prods. v. PSKS, Inc.,
127 S. Ct. 2705 (2007) 23

Leitch Mfg. Co. v. Barber Co.,
302 U.S. 458 (1938) 27, 28

LG Elecs., Inc. v. Bizcom Elecs., Inc.,
453 F.3d 1364 (Fed. Cir. 2006)..... 29

Page

Mallinckrodt, Inc. v. Medipart, Inc.,
976 F.2d 700 (Fed. Cir. 1992)..... 3, 10, 11, 13, 14
28, 29, 30

Mercoid Corp. v. Mid-Continent Inv. Co.,
320 U.S. 661 (1944) 27

Mitchell v. Hawley,
83 U.S. 544 (1872) 5, 6, 7, 8, 10, 14
19, 29, 30

Payne v. Tennessee,
501 U.S. 808 (1991) 17, 18

Planned Parenthood v. Casey,
505 U.S. 833 (1992) 16, 17, 18

Providence Rubber Co. v. Goodyear,
76 U.S. 788 (1869) 19

Rock v. Arkansas,
483 U.S. 44 (1987) 22

Shockley v. Arcan, Inc.,
248 F.3d 1349 (Fed. Cir. 2001)..... 24

Steiner Sales Co. v. Schwartz Sales Co.,
98 F.2d 999 (10th Cir. 1938) 11

Transclean Corp. v. Jiffy Lube Int'l, Inc.,
474 F.3d 1298 (Fed. Cir. 2007)..... 24

Page

United States v. Gen. Elec. Co.,
272 U.S. 476 (1926) 9, 10, 15, 16
18, 19, 30

United States v. Univis Lens Co.,
316 U.S. 241 (1942) 3, 14, 30

Zenith Radio Corp. v. Hazeltine Research, Inc.,
401 U.S. 321 (1971) 25

FEDERAL STATUTES

35 U.S.C. § 271(d)(5)..... 4, 19, 20, 21

BOOKS AND ARTICLES

Colonel J. Jeremiah Mahoney & Captain Christopher C. VanNatta, *Jurisprudential Myopia: Polygraphs in the Courtroom*, 43 A.F.L. REV. 95, 140-141 (1997)..... 22

Mehdi Ansari, Note, *LG Electronics, Inc. v. Bizcom Electronics, Inc.: Solving the Foundry Problem in the Semiconductor Business*, 22 BERKELEY TECH. L.J. 137 (2007) 22

Peter S. Menell, *Bankruptcy Treatment of Intellectual Property Assets: An Economic Analysis*, 22 BERKELEY TECH. L.J. 733 (2007)..... 14

RESTATEMENT OF TORTS
§ 885(3) (1939) 24

Page

OTHER AUTHORITY

NEC Electronics America Standard Terms and Conditions, http://www.am.necel.com/legal/LegalTC.html 27

Fairchild Semiconductor Corporation Standard Terms and Conditions of Sale, http://www.fairchildsemi.com/legal/sale_terms_cond.html 27

IDENTITY AND INTEREST OF THE *AMICUS CURIAE*[1]

Wi-LAN, Inc. ("Wi-LAN") is a publicly traded corporation founded to commercialize fundamental breakthroughs in wireless technology. Wi-LAN's technology underlies wireless communication devices such as the wireless routers ubiquitous in homes, offices, airports, and elsewhere. The IEEE, the leading standard setting organization for wireless networking, has incorporated Wi-LAN's technologies into several of its wireless standards that make reliable, high rate data transmission available to the public.

Wi-LAN files this Brief in support of respondent to address important legal issues not addressed by the parties or previous *amici*, including the *per se* patent exhaustion or "single license rule" advocated by petitioners, and because the relief requested by petitioners implicates the freedom to contract of Wi-LAN, its licensees, and others who have relied upon existing law. Reversal of the longstanding authority of this Court on patent exhaustion, and the 15-year-old Federal Circuit authority expressly based upon this Court's

---

[1] The parties have consented to the filing of this Brief. Pursuant to Supreme Court Rule 37.6, no counsel for a party authored this Brief in whole or in part, and no counsel or party made a monetary contribution intended to fund the preparation or submission of this Brief. No person other than *amicus curiae*, its members, or its counsel made a monetary contribution to its preparation or submission.

jurisprudence (and consistent with the regional circuit decisions before the creation of the Federal Circuit), will throw into doubt the enforceability of billions of dollars in patent licensing agreements. This, in turn, will result in extensive litigation to determine the effect of the reversal on existing license agreements.

The rule of law advocated by petitioners will also distort market forces and propel electronic component manufacturers (conspicuously absent among the *amici* supporting petitioners) into conflict with patent owners because, in many instances, electronic component manufacturers are unable or unwilling to pay the full value of a patent license for both their own use and use by others in the distribution chain (such as device manufacturers). Permitting market participants at any point in a vertical chain of distribution the freedom to enter into agreements as they see fit is essential to reaching accord as to the appropriate scope of a particular licensing agreement.

The *per se* patent exhaustion or "single-license rule" advocated by petitioners will eliminate this freedom of contract. Such a restriction on the flexibility of parties at different points in the chain of distribution is an obstacle to the apportionment of royalties among those parties and will likely result in a substantial increase in litigation. Moreover, as the amount in dispute will represent the entire value of the royalty, the ratio of the potential damages to litigation costs will increase. Accordingly, litigation will become the optimal means for a patent owner to

achieve collection of a full royalty for use of the patented invention.

SUMMARY OF THE ARGUMENT

Before the creation of the Federal Circuit, the regional circuits applied this Court's historical precedents on patent exhaustion in a fashion similar to the Federal Circuit's holding in *Mallinckrodt, Inc. v. Medipart, Inc.*, 976 F.2d 700 (Fed. Cir. 1992) and in this case, and did so even after the Court's decision in *United States v. Univis Lens Co.*, 316 U.S. 241 (1942). Accordingly, there is nothing revolutionary in the Federal Circuit's holding in *Mallinckrodt* or in the case *sub judice*, as petitioners suggest. Pet. Br.[2] 51. Indeed, the approach by the Federal Circuit in *Mallinckrodt* and in this case represents nothing more than the historical norm.

This Court has traditionally recognized a patent owner's freedom to contract and upheld limitations on the scope of patent licenses, permitting patent owners to divide up the prerogatives of patent ownership with licensees as desired and agreed upon by the parties to the licensing agreement, without triggering patent exhaustion. The Court should continue this line of authority, rejecting petitioners' efforts to disregard this gradation of the patent exhaustion doctrine created over a century ago.

Well-established legal principles affecting property rights should also be upheld, including the body of authority from this Court supporting the

---

[2] Petitioners' Brief.

freedom of a patent owner, either directly itself or indirectly through its licensees, to condition the sale of a patented article, and, thus, the scope of use rights conveyed to purchasers in the distribution chain. A patentee has historically been permitted to impose such conditions so long as reasonably within the scope of the patent grant. In a conditional transaction it is reasonable to infer that the parties have negotiated a price only for the limited use rights conferred by the patent owner.

The relief sought by petitioners and some of their *amici* allies would create a *per se* rule of law for patent exhaustion or a "single license rule" that would not permit a patent owner to enforce such conditions on the sale of a patented article or the license of patent rights and would render irrelevant whether the patent owner has received full value for use of the patented invention. Any such *per se* rule would be contrary to the Court's precedents and in direct conflict with 35 U.S.C. § 271(d)(5), where Congress pronounced that conditions imposed by a patent owner on "the sale of the patented product" or "license of any rights to the patent" shall not be *per se* negated or exhausted. § 271(d)(5).

ARGUMENT

I. CONDITIONS ON THE SALE OF PATENTED ARTICLES AND THE LICENSE OF PATENT RIGHTS HAVE CONSISTENTLY BEEN UPHELD BY THE COURT

A. This Court And The Regional Circuits, Prior To The Creation Of The Federal Circuit, Have Consistently Upheld Such Conditions

In support of their argument that conditions placed on the sale of patented articles are contrary to legal precedent, petitioners state that the Federal Circuit misunderstands the Court's holding in *Mitchell v. Hawley*, 83 U.S. 544 (1872). Pet. Br. 18. According to petitioners, the Federal Circuit has erroneously read the *Mitchell* opinion as supporting a patent owner's imposition of "'conditions' on the use of sold goods and enforce[ment of] them with infringement suits." *Id.* Instead, petitioners argue that the Court in "*Mitchell* emphasized that patentees can engage in 'conditional sales' only in the 'same manner as if dealing with property of any other kind.'" Pet. Br. 19 (quoting *Mitchell*, 83 U.S. at 548). This statement is followed by a number of decisions demonstrating the impropriety of conditions placed on "property of any other kind." *Id.* According to petitioners' argument, because post-sale conditions involving "property of any other kind" have been criticized and found improper, conditions placed on

the sale of patented articles should, under the Court's holding in *Mitchell*, likewise be found improper.

Petitioners' entire argument here, however, is itself based upon a mischaracterization of the *Mitchell* holding. In *Mitchell*, the Court did not "emphasize" that patentees can engage in 'conditional sales' only in the 'same manner as if dealing with property of any other kind.'" Pet. Br. 19 (quoting *Mitchell*, 83 U.S. at 548). Instead, it found that sales of patented implements and machines "may be made by the patentee *with or without conditions*[.]" *Mitchell*, 83 U.S. at 548 (emphasis added). The Court then found that when a sale is made "without any conditions . . . [the purchaser] may repair it or improve upon it as he pleases, in same manner as if dealing with property of any other kind." *Mitchell*, 83 U.S. at 548. Contrary to petitioners' argument, the Court explicitly approved of conditions placed on the sales of patented articles to a purchaser and specifically contrasted unconditional sales with sales upon which conditions are placed.

This Court also expressly held that those conditions or restrictions pass on to purchasers of the licensed products. In *Mitchell*, the Court found that a licensee is not empowered to convey a license to purchasers beyond the limits of the license grant:

> No one in general can sell personal property and convey a valid title to it unless he is the owner or lawfully represents the owner. *Nemo dat quod non habet.*

> Persons, therefore, who buy goods from one not the owner, and who does not lawfully represent the owner, however innocent they may be, obtain no property whatever in the goods, as *no one can convey in such a case any better title than he owns*, unless the sale is made in market overt, or under circumstances which show that the seller lawfully represented the owner. . . . Notice to the purchaser in such a case is not required, as the law imposes the risk upon the purchaser[.]

Mitchell, 83 U.S. at 550 (second emphasis added). Similarly, in *Gen. Talking Pictures Corp. v. W. Elec. Co.*, the Court found a purchaser and commercial user of patented radio amplifiers liable for infringement for violation of "home use only" restrictions placed on the seller's license, and, thus, conditions placed on the sale, holding that it was "in no better position than if it had manufactured the amplifiers itself without a license. It is liable because it has used the invention without [a] license to do so." 305 U.S. 124, 127 (1938) ("*Gen. Talking Pictures II*").

Petitioners and *amicus curiae* United States seek to improperly restrict the holding in *Mitchell*, notwithstanding that it unquestionably upholds the right of patent owners to place conditions on the sale of patented machines, either directly themselves or indirectly through their licensees. In an effort to delimit *Mitchell*, they narrowly define the term

"conditional sale" as a condition precedent or condition to be performed in advance of the sale, in which title to the patented article has not passed, and thus patent exhaustion does not arise. Pet. Br. 19–20 & n.7; Gov. Br.[3] 20–21. According to petitioners and amicus curiae United States, because the Court in *Mitchell* was focusing on "conditional sales," meaning conditions precedent to a sale, the Court's holding is inapplicable to conditions of the sort here at issue. *Mitchell*, however, did not involve a "conditional sale"—as the term is narrowly construed by petitioners and *amicus curiae* United States. Instead, the licensing agreement at issue was "subject to certain restrictions and limitations," or conditions subsequent that would restrict use of the patented invention, just as in respondent's licensing agreements with Intel. *See Mitchell*, 83 U.S. at 548. Accordingly, despite petitioners' and amicus curiae United States' arguments to the contrary, when the Court found in *Mitchell* that "[s]ales of [patented implements or machines] may be made by the patentee with or without conditions[,]" it was not referencing a "conditional sale" as narrowly defined by petitioners but, instead, conditions that are placed on a sale, *i.e.*, conditions subsequent that impose restrictions on a purchaser's use. *See id.*

Likewise, in *Gen. Talking Pictures Corp. v. W. Elec. Co.*, 304 U.S. 175 (1938) ("*Gen. Talking Pictures I*") and *Gen. Talking Pictures II*, the Court's use of "conditions" was again not in the context of a "conditional sale" meaning a condition precedent as

---

[3] *Amicus Curiae* United States' Brief.

narrowly defined by petitioners, but rather focused on conditions placed on the sale, or conditions subsequent; in this case, conditions were placed on the purchaser's right to use the patented radio amplifiers, restricting such use to home use only. *See Gen. Talking Pictures I*, 304 U.S. at 181 (holding that "[u]nquestionably, the owner of a patent may grant licenses to manufacture, use or sell upon conditions not inconsistent with the scope of the monopoly"); *Gen. Talking Pictures II*, 305 U.S. at 127 ("That a restrictive license is legal seems clear. . . . [T]he patentee may grant a license 'upon any condition the performance of which is reasonably within the reward which the patentee by the grant of the patent is entitled to secure.'") *See also United States v. Gen. Elec. Co.*, 272 U.S. 476, 489 (1926) (finding that "the patentee may grant a license to make, use and vend articles under the specifications of his patent for any royalty or upon any condition the performance of which is reasonably within the reward which the patentee by the grant of the patent is entitled to secure."); *Albright v. Teas*, 106 U.S. 613 (1883) (using the term "unconditional" in the context of conditions placed on the sale, or conditions subsequent limiting a purchaser's use of the patented invention. In *Albright v. Teas*, the Court found that because the patentee had transferred "all his title and interest in the inventions covered by his patents[, in which t]he transfer was absolute and unconditional[, h]e had no right to prosecute anyone for infringements of his patents[.]" 106 U.S. at 617.)

Petitioners assert that "[t]o our knowledge the *only* case in which this Court has ever permitted a patent owner to sell goods while reserving the

statutory right to sue for infringement if certain conditions are not met is A.B. Dick[.]" Pet. Br. 14 (emphasis in original). This assertion is incorrect and misleading. In 2006, in *Ill. Tool Works Inc. v. Independent Ink, Inc.*, the Court expressly approved of a patent owner's right to sue for patent infringement a purchaser of its patented inkheads and patented ink containers who violated the condition placed on the sale—the condition restricted use of the patented article to use only with unpatented ink purchased from the patentee's parent company. 547 U.S. 28, 42 (2006).

In addition, there are numerous cases where, as in the case at bar, the patentee limited the rights conveyed to purchasers indirectly through limitations on the scope of license granted to its licensees. In *Mitchell, Gen. Talking Pictures I* and *II*, and *Gen. Elec. Co.*, this Court permitted both limitations on the scope of the grant of a license to a manufacturer and a subsequent infringement action against purchasers in the distribution chain who exceeded the scope of the license granted to the manufacturer. To say that a patent owner can indirectly restrict the rights conveyed to a purchaser through its licensees yet not do so directly would be anomalous. Indeed, the Court has consistently acknowledged a patentee's right to so limit a purchaser's use to enable full recovery for use of the patented invention.

Petitioners would have the Court accept the proposition that the Federal Circuit's decision in *Mallinckrodt* represents a significant departure from this Court's jurisprudence. Indeed, *amicus curiae* American Antitrust Institute explicitly argues that

the Federal Circuit's *Mallinckrodt* line of authority renders it a rogue circuit that must be reigned in by the Court. AAI Br.[4] 27 ("This case arrives before the Court in the line of recent cases in which the Court has corrected overexpansive readings of patent rights by the Federal Circuit that impair competition and innovation."). The Federal Circuit, however, is not alone in giving meaning to the line of authority from this Court. In the era before the consolidation of patent appeals in the Federal Circuit, those regional circuits addressing the issue ruled in a similar fashion, even after the Court's decision in *Univis* that is relied on by petitioners.

In *Steiner Sales Co. v. Schwartz Sales Co.*, the Tenth Circuit upheld a patentee's licensing restriction that required "the licensee to purchase the patented cabinets and patented improvements only from a manufacturer authorized by the licensor." 98 F.2d 999, 1010 (10th Cir. 1938). The court held that "a patentee may condition the right of his licensee to purchase the patented devices" and that "the license agreement does not impose restrictions beyond the lawful monopoly of the patents or that are not reasonably necessary to protect the rights of Steiner under its lawful patent monopoly." *Id.* at 1010, 1011; *see also id.* at 1008 ("Unquestionably, the owner of a patent may grant licenses to manufacture, use, or sell upon conditions not inconsistent with the scope of the monopoly." (citing *Gen. Talking Pictures I*, 304 U.S. at 181)).

---

[4] *Amicus Curiae* American Antitrust Institute's Brief.

Likewise, in *Extractol Process, Ltd. v. Hiram Walker & Sons, Inc.*, the Seventh Circuit found that the patent owner had a "clear right to control the making and disposition of the patented article." 153 F.2d 264, 268 (7th Cir. 1946). In *Extractol Process*, the patent owner had granted the licensee manufacturer the right to manufacture and sell the patented machines only to those who were licensed by the patent owner to use the machines. *Id.* at 267–68. The court recognized the patent owner's right to grant both broad and narrow licenses. *Id.* at 268 ("It was clearly within its right to grant to one party a license to make an article, and to sell the same, and a license to use the article to another party. The patentee is the sole judge of the licensee he shall select, to make, to sell, or to use his patented article.").

In *Automatic Radio Mfg. Co. v. Hazeltine Research, Inc.*, the First Circuit rejected a patent misuse defense based on a licensing restriction imposed by the patent owner that required the licensee to mark all products manufactured under the patent with the statement "licensed by Hazeltine Corporation only for use in homes, for educational purposes, and for private, non-commercial use." 176 F.2d 799, 801 (1st Cir. 1949) (overruled on other grounds). The court held that, based on the decision in *Gen. Talking Pictures I*, "a license agreement is not necessarily invalid because the licensee is granted a restricted right to make and vend a patented apparatus for use limited to a particular, described field, and is required by the agreement to affix to the licensed apparatus a notice of such restricted use." *Id.* at 803 (discussing *Gen. Talking*

Pictures I, 304 U.S. at 181). The Federal Circuit, thus, is hardly alone in its application of the Court's storied precedents.

In *Coats Loaders & Stackers, Inc. v. Henderson*, the Sixth Circuit held that a restrictive licensing provision required by a patentee did not violate the antitrust laws. 233 F.2d 915, 926 (6th Cir. 1956). The licensing restriction at issue stated that "[l]icensee agrees that it will not sell to any distributor or dealer in which it or any of its stockholders or officers have any financial interest, directly or indirectly, unless otherwise mutually agreed upon." *Id.* The court found that "the owner of a patent may grant licenses to manufacture, use, or sell upon conditions not inconsistent with the scope of the monopoly." *Id.* at 927 (citing *Gen. Talking Pictures I*, 304 U.S. at 181).

In *In re Yarn Processing Patent Validity Litig.*, the Fifth Circuit upheld a licensing restriction that prohibited the sale of patented machines to unlicensed users. 541 F.2d 1127, 1135 (5th Cir. 1976). The court held that the licensor had the right to license the use of the machinery separately from its manufacture and sale, and that the first-sale doctrine did not apply. *Id.*

B. Mallinckrodt And This Case Are Conceptually Distinguishable From *Univis*

The Federal Circuit found in *Mallinckrodt* that unless the license condition violates some other law or policy, notably the patent misuse or antitrust law,

the patent owner retains the freedom to contract concerning the conditions of sale. *Mallinckrodt*, 976 F.2d at 708; *see also id.* at 704 ("That a restrictive license is legal seems clear." (citing *Gen. Elec.*, 272 U.S. at 489)); Peter S. Menell, *Bankruptcy Treatment of Intellectual Property Assets: An Economic Analysis*, 22 BERKELEY TECH. L.J. 733, 742 (2007) ("Short of an outright assignment, a patent owner is generally free to license rights under the patent as he wishes (subject to competition policy constraints)."). The Court in *Univis* did not hold otherwise, but rather held that an *unconditional* sale of a patented product exhausted the patent owner's rights in the patent. The holding in *Mallinckrodt* is, thus, consistent with the line of authority ending with *Univis*.

In *Univis*, unlike in *Mallinckrodt* or this case, the Court was faced with price fixing conditions in the licensing arrangement imposed by the patent owner that were not within the protection of the patent laws. *Univis*, 316 U.S. at 250–53. The licensing restriction in *Univis* prescribed fixed prices for the resale of the patented products by the licensees, a condition the Court found outside the scope of the patent monopoly. *Id.* at 245. It is clear that *Univis* did not overrule the holdings in *Mitchell* and *Gen. Talking Pictures I* and *II*, which provide that the patent owner has the freedom to place conditions on the sale so long as they are within the scope of the patent monopoly (*e.g.*, territorial limitations, field of use limitations, single use limitations, etc.). *See In re Yarn Processing Patent Validity Litig.*, 541 F.2d at 1135 (distinguishing *Univis*, finding that the restrictions that were found illegal in *Univis* "were . . . illegal extensions of the

patent monopoly. But in this case, . . . the restrictions on sale were [proper] because they . . . did no more than to prevent contributory infringement by resale to unlicensed users.").

This Court has long recognized a patent owner's freedom to contract in any manner desired, including by licensing either an undivided part or a share of his exclusive right to make, use, and sell his invention:

> The owner of a patent may assign it to another and convey, (1) the exclusive right to make, use and vend the invention throughout the United States, or, (2) an undivided part or share of that exclusive right, or (3) the exclusive right under the patent within and through a specific part of the United States.

Gen. Elec., 272 U.S. at 489. Furthermore, a patent owner may limit the scope of a license to a defined field, or on a claim by claim basis, and thereby a purchaser's right to use the patented invention, and may place any condition upon the license that is not inconsistent with the scope of the patent monopoly. *See Gen. Talking Pictures I*, 304 U.S. at 181 ("Patent owners may grant licenses extending to all uses or limited to use in a defined field. Unquestionably, the owner of a patent may grant licenses to manufacture, use or sell upon conditions not inconsistent with the scope of the monopoly."); *Gen. Elec.*, 272 U.S. at 489 ("Conveying less than title to the patent, or part of it,

the patentee may grant a license to make, use and vend articles under the specifications of his patent for any royalty or upon any condition the performance of which is reasonably within the reward which the patentee by the grant of the patent is entitled to secure."); *Int'l Gamco, Inc. v. Multimedia Games, Inc.*, 504 F.3d 1273, 1278 (Fed. Cir. 2007) ("The claim-by-claim exclusive license in *Pope* is indistinguishable from an exclusive field of use license insofar as both types of licenses divide the scope of a patent right by its subject matter.").

Valid license restrictions include those limiting the use and the sale of the patented product. *See Gen. Talking Pictures I*, 304 U.S. at 181 (upholding a license that was restricted "[t]o manufacture . . . and to sell only for radio amateur reception, radio experimental reception and radio broadcast reception"); *Gen. Elec.*, 272 U.S. at 490 ("The patentee may make and grant a license to another to make and use the patented articles, but withhold his right to sell them."); *In re Yarn Processing Patent Validity Litig.*, 541 F.2d at 1135 ("Leesona had the right to license the use of the machinery separately from its manufacture and sale.").

II. THE COURT SHOULD CONTINUE TO GIVE FULL EFFECT TO ITS DECISIONS PERMITTING CONDITIONS ON THE SALE OF PATENTED ARTICLES AND THE LICENSE OF PATENT RIGHTS

A. Well-Settled Legal Principles Permitting Conditions Should Remain Undisturbed

The Court has repeatedly recognized the importance and obligation of following precedent. *See Planned Parenthood v. Casey*, 505 U.S. 833, 854 (1992) ("Indeed, the very concept of the rule of law underlying our own Constitution requires such continuity over time that a respect for precedent is, by definition, indispensable."); *Payne v. Tennessee*, 501 U.S. 808, 827 (1991) ("*Stare decisis* is the preferred course because it promotes the evenhanded, predictable, and consistent development of legal principles, fosters reliance on judicial decisions, and contributes to the actual and perceived integrity of the judicial process.").

Oftentimes, the need for well-settled law outweighs the desire to enforce the correct rule of law. *See Payne*, 501 U.S. at 827 ("Adhering to precedent is usually the wise policy, because in most matters it is more important that the applicable rule of law be settled than it be settled right."). The concern for well-settled law is even more important in cases where reliance is a factor. *See Hilton v. S.C. Pub. Rys. Comm'n*, 502 U.S. 197, 202 (1991) ("*Stare decisis* has added force when the legislature, in the public sphere, and citizens, in the private realm,

have acted in reliance on a previous decision, for in this instance overruling the decision would dislodge settled rights and expectations or require an extensive legislative response."); *Planned Parenthood*, 505 U.S. at 855 ("The inquiry into reliance counts the cost of a rule's repudiation as it would fall on those who have relied reasonably on the rule's continued application.").

These concerns for well-settled law and reliance become highly relevant in cases in the commercial context where property rights are at issue, as in the present case. *See Payne*, 501 U.S. at 828 ("Considerations in favor of *stare decisis* are at their acme in cases involving property and contract rights, where reliance interests are involved."); *Planned Parenthood*, 505 U.S. at 855–56 (citation omitted) ("[T]he classic case for weighing reliance heavily in favor of following the earlier rule occurs in the commercial context, . . . where advance planning of great precision is most obviously a necessity[.]").

Petitioners, *amicus curiae* United States, and *amicus curiae* International Business Machines Corporation concede that this Court has expressly held that conditions or restrictions imposed in patent licensing agreements are permissible. Discussing the Court's holdings in *Bement v. Nat'l Harrow Co.*, 186 U.S. 70, 91 (1902), *Gen. Elec.*, 272 U.S. at 489–90, and *Gen. Talking Pictures I*, 304 U.S. at 180–81, petitioners admit that "this Court has permitted conditions imposed on manufacturing *licensees*, restricting the terms under which they are authorized to make, use and sell the product." Pet. Br. 28–29 (emphasis in original). However, they

incorrectly suggest to the Court that limitations on the scope of a license are not also imposed as conditions on the sale to a purchaser, such that the purchaser can be sued for patent infringement if operating outside the scope of the license restrictions. *Id.* at 21–24.

Indeed, *amicus curiae* United States concedes that "this Court has repeatedly held that a patentee may require licensees to comply with any lawful restriction to which the parties may agree—including field-of-use restrictions and even minimum-price restrictions—on pain of liability for patent infringement for both the licensee *and purchasers*." Gov. Br. 16 (citing *Gen. Talking Pictures II*, 305 U.S. at 127; *Gen. Elec.*, 272 U.S. at 480–90; *Mitchell*, 83 U.S. at 547–51) (emphasis added).

Likewise, in its Brief, *amicus curiae* International Business Machines Corporation admits that "[w]hile the Court has recognized a strong exhaustion doctrine, it has also recognized, for over a century, an exception to exhaustion where there is an express agreement limiting the licensee's or purchaser's rights under a patent." IBM Br.[5] 14. Discussing the Court's holdings in *Bloomer v. Millinger*, 68 U.S. 340, 346 (1864), *Providence Rubber Co. v. Goodyear*, 76 U.S. 788, 799–800 (1869), *Gen. Talking Pictures II*, 305 U.S. at 127, *Gen. Elec.*, 272 U.S. at 489–90, *Mitchell*, 83 U.S. at 550, *amicus curiae* International Business Machines Corporation concludes that "[t]his Court has repeatedly

---

[5] *Amicus Curiae* International Business Machines Corporation's Brief.

recognized the patentee's ability to restrict licensees and their downstream purchasers through valid licensing restrictions." *Id.* at 14–16.

B. A *Per Se* Patent Exhaustion Rule Would Be In Direct Conflict With 35 U.S.C. § 271(d)(5)

In 1988, Congress enacted the Patent Misuse Reform Act which placed certain limits on the defense of patent misuse and made clear that a patent owner can condition the sale of a patented article or the license of patent rights so long as reasonably within the scope of the patent grant. 35 U.S.C § 271(d)(5). Section 271(d)(5) is codified, in part, as follows:

> No patent owner otherwise entitled to relief for infringement or contributory infringement of a patent shall be denied relief or deemed guilty of misuse or illegal extension of the patent right by reason of his having done one or more of the following: . . . (5) *conditioned the license of any rights to the patent or the sale of the patented product* on the acquisition of a license to rights in another patent or purchase of a separate product, unless, in view of the circumstances, the patent owner has market power in the relevant market for the patent or

> patented product on which the license or sale is conditioned.

35 U.S.C. § 271(d)(5) (emphasis added). That is, product tying conditions on the sale of patented articles or the license of patent rights, a persistent subject of judicial review, is specifically made legal by Congress in the absence of market power and anticompetitive effect. *Ill. Tool Works Inc. v. Independent Ink, Inc.*, 547 U.S. 28, 42 (2006) (finding that the patent owner's condition on the sale of patented inkheads and patented ink containers restricting use only with unpatented ink purchased from the patentee "was neither 'misuse' nor an 'illegal extension of the patent right'" (quoting § 271(d)(5))). Section 271(d)(5) is a clear statement by Congress that a patent owner can condition the sale of a patented article or the license of patent rights.

The resulting legislative scheme does not permit every condition that a patentee may conceive, nor does it permit, however, the mechanistic disregard of every condition under the doctrine of patent exhaustion or any other rule of law. The petitioners' proposed rule, that all conditions on the sale of a patented article are *per se* unenforceable, is, thus, in open conflict with the Congressional pronouncement in § 271(d)(5). The statute provides that relief for patent infringement shall not be negated or exhausted due to the patent owner's conditioning "the sale of the patented product" or "license of any rights to the patent[.]" § 271(d)(5) (emphasis added). Accordingly, § 271(d)(5) indicates a Congressional intent against any *per se* rule of exhaustion.

C. Public Policy Considerations Militate Against A *Per Se* Rule

While there are instances in the Court's precedent where the doctrine of patent exhaustion has been a useful tool to prevent overreaching by patentees, there are also many instances where license conditions have been rationally permitted as a valid exercise of the patent grant. This is because the equities and logic weighing in favor of each side are in substantial equipoise. Because there are many circumstances, for example, self-replicating biotechnology, easily copied software, and the so-called "foundry problem,"[6] and future circumstances not yet contemplated, where robust application of the first sale doctrine, *i.e.*, a *per se* patent exhaustion rule will lead to a suboptimal result, a more prudent course is to maintain the Court's long-standing acceptance of license conditions reasonably within the scope of the patent grant. This will continue to enable parties to freely contract for use of the patented invention in a flexible and efficient manner. Any potential harm to purchasers can be (as it always has been) tempered by continued vigorous application of the equitable doctrine of patent misuse in the face of anticompetitive restrictions or limitations.

---

[6] *See, e.g.*, Mehdi Ansari, Note, *LG Electronics, Inc. v Bizcom Electronics, Inc.: Solving the Foundry Problem in the Semiconductor Industry*, 22 BERKELEY TECH. L.J. 137, 137 (2007) (describing the "foundry problem" as a situation "in which a third-party competitor can free-ride on the licensing agreements between patentees and foundries to gain access to technologies without negotiating their own license").

In general, *per se* rules are disfavored because they are overly mechanical and eliminate judicial discretion. See Colonel J. Jeremiah Mahoney & Captain Christopher C. VanNatta, *Jurisprudential Myopia: Polygraphs in the Courtroom*, 43 A.F.L. REV. 95, 140–41 (1997) ("*Per se* rules are generally disfavored because of their overly mechanical application." (citing *Rock v. Arkansas*, 483 U.S. 44, 56 n.12 (1987) ("The [*per se*] rule leaves a trial judge no discretion to admit this testimony, even if the judge is persuaded of its reliability by testimony at a pretrial hearing."))).

This Court recently discussed the limited applicability of *per se* rules for antitrust cases in *Leegin Creative Leather Prods. v. PSKS, Inc.*, 127 S. Ct. 2705 (2007). The Court held that *per se* rules are confined to restraints "'that would always or almost always tend to restrict competition and decrease output.'" *Id.* at 2713 (quoting *Bus. Elecs. Corp. v. Sharp Elecs. Corp.*, 485 U.S. 717, 723 (1988)). The Court further found that to justify a *per se* rule, "a restraint must have 'manifestly anticompetitive' effects, and 'lack . . . any redeeming virtue.'" *Id.* (citations omitted). The Court concluded that "the *per se* rule is appropriate only after courts have had considerable experience with the type of restraint at issue, and only if courts can predict with confidence that it would be invalidated in all or almost all instances under the rule of reason." *Id.* (citations omitted). This case further illustrates that *per se* rules are only appropriate under limited circumstances and should not be freely adopted by courts.

1. The Single Recovery Rule Prevents Abuse Of Patent Rights

Petitioners warn of patent owners' abuse of the patent grant if the *Mallinckrodt* rule is maintained. Any potential for abuse is, however, further mitigated by the single recovery rule. The single recovery rule (or full compensation rule) limits a patent owner's potential damages to a single full recovery:

> "Payments made by one tortfeasor on account of a harm for which he and another are each liable, diminish the amount of the claim against the other whether or not it was so agreed at the time of payment and whether the payment was made before or after judgment[.]"

Aro Mfg. Co. v. Convertible Top Replacement Co., 377 U.S. 476, 503 (1964) ("*Aro II*") (quoting RESTATEMENT OF TORTS (1939), § 885 (3)). The Federal Circuit has consistently followed this rule. *See, e.g., Shockley v. Arcan, Inc.*, 248 F.3d 1349, 1364 (Fed. Cir. 2001) (finding that "[e]ach joint tort-feasor is liable for the full amount of damages (up to a full single recovery)"); *Transclean Corp. v. Jiffy Lube Int'l, Inc.*, 474 F.3d 1298, 1303 (Fed. Cir. 2007) (holding that "a patentee may not sue users of an infringing product for damages if he has collected actual damages from a manufacturer or seller, and those damages fully compensate the patentee for infringement by users"). Thus, under the Federal Circuit rule, a patent owner

who has collected a partial recovery in the form of a royalty is limited in the future judgment that it may seek from others. Accordingly, petitioners' concern that a patent owner may collect a royalty from a component supplier and then "demand outrageous royalties from the next level down" is overstated. Pet. Br. 53.

2. Treating Licenses Differently From Releases Of Liability Creates An Anomaly And An Obstacle To Settlement

This Court's precedent provides that the effect of a release "shall be determined in accordance with the intentions of the parties." *Zenith Radio Corp. v. Hazeltine Research, Inc.*, 401 U.S. 321, 347 (1971) (finding that "[t]he straightforward rule is that a party releases only those other parties whom he intends to release"); *see also Chiuminatta Concrete Concepts, Inc. v. Cardinal Indus.*, 1 Fed. Appx. 879, 885 (Fed. Cir 2001) (nonprecedential) ("It is well settled that 'a party releases only those other parties whom he intends to release.'" (quoting *Zenith Radio*, 401 U.S. at 347)). This rule is appropriate to give parties the flexibility to resolve disputes in an ad hoc fashion, but it is not a cure-all as it resolves only past infringement, forcing patent owners (in the new *per se* world proposed by petitioners) to periodically bring suit as there are additional damages.

Petitioners' proposed rule, which may be described as a "single license rule," lacks the flexibility of the release rule and thus would create unnecessary difficulties in the resolution of patent

disputes. A certain reluctance to pay for the entire chain of distribution is to be expected in some circumstances but not in all circumstances; thus, there is a need to let the realities of the marketplace in each situation and the parties' intentions control the most efficient licensing arrangement to permit full recovery for use of a patent invention.

3. Petitioners' Policy Justifications For *Per Se* Exhaustion Lack Merit

Petitioners set forth five policy arguments intended to show the efficacy of their proposed *per se* exhaustion rule. The first argument is that the Federal Circuit rule "has enabled patent owners to create a form of property rights—personal property servitudes—not generally recognized in property law." Pet. Br. 47. A condition on one's right to practice an invention, however, is a property right created by the patent grant from the United States. The Federal Circuit has not created a new property right in patents; rather, it has declined (as has Congress) to create a *per se* rule extinguishing in all cases limitations or conditions imposed by patent owners that are reasonably within the scope of the patent grant.[7]

---

[7] Petitioners' argument regarding increased information costs is also ill-founded. It is unreasonable to expect a component seller to serve as an omniscient information clearinghouse. A complex technical component may literally embody several thousand patents held by various entities. Neither the buyer nor the seller would be aware of all relevant patents, despite both being regularly deluged with notice letters from patentees. Rather, costs are allocated among the parties through indemnification

Petitioners' second argument is that a rule of *per se* exhaustion or "single license rule" "reduces transaction costs without reducing the patentee's reward." Pet. Br. 49. If this were the case, however, rational patentees and licensees would have adopted such a rule by consensus. They have not. For example, component suppliers, particularly those in the highly competitive microchip business, are often unwilling or unable to pay a royalty that would compensate a patentee for the full value of their use and use by others in the distribution chain. Indeed, in practice, most components are sold subject to indemnification agreements with certain standard limitations. The suppliers' indemnification liability is typically limited to the sale price of the component and does not extend to liability arising from the combination of the indemnitor's component with other goods.[8]

Petitioners' third argument is that the Federal Circuit rule opens the door to antitrust abuse. Petitioner warns of a "new era" of ubiquitous anticompetitive notices and unilaterally imposed conditions. Pet. Br. 50. Here, petitioners mismatch the poison and the antidote. The remedy or antidote

---

agreements. Private agreements permit the parties to allocate risk in a flexible and efficient manner apart from any externally imposed rule.

[8] *See, e.g.*, NEC Electronics America Standard Terms and Conditions, available at http://www.am.necel.com/legal/LegalTC.html; Fairchild Semiconductor Corporation Standard Terms and Conditions of Sale, available at http://www.fairchildsemi.com/legal/sale_terms_cond.html.

for antitrust abuse is the equitable doctrine of patent misuse, not an inflexible *per se* rule of patent exhaustion. *See, e.g., Mercoid Corp. v. Mid-Continent Inv. Co.*, 320 U.S. 661, 668 (1944) (finding patent misuse to bar a remedy for contributory infringement to a patentee who engaged in tying activity); *Leitch Mfg. Co. v. Barber Co.*, 302 U.S. 458, 462 (1938) (holding that "[c]ontrol over the supply of such unpatented material is beyond the scope of the patentee's monopoly").

Petitioners' fourth argument is that continuation of the Federal Circuit's longstanding rule regarding the inexhaustibility of method claims and patent exhaustion will result in "an explosion of infringement suits seeking a second round of royalties from persons who . . . purchased goods and paid full price for them expecting that the patentee's claims were satisfied." Pet. Br. 51. *Amicus curiae* Wi-LAN gives little credence to petitioners' warning, as this rule has been in place since at least 1984. *See Bandag, Inc. v. Al Bolser's Tire Stores, Inc.*, 750 F.2d 903, 924 (Fed. Cir. 1984)). No explosion has yet emerged, and none seems likely.

Petitioners' fifth argument is that "patentees have quite effective strategies at their disposal, and do not need this radical change in existing law." Pet. Br. 51. Wi-LAN first takes issue with the notion that application of the rule of law unambiguously established no later than 1992 with the Federal Circuit's *Mallinckrodt* decision is a "radical change." Nor is it correct that patentees would have effective non-litigation strategies in the face of a *per se* exhaustion rule or a single license rule. As discussed

above, one company in the distribution chain is often unwilling or unable to compensate the patent owner for use of the patent invention by others in the distribution chain. Petitioners further argue that *per se* exhaustion rule is consistent with commercial norms because:

> No rational company would pay LGE any significant royalty for a "license" to make and sell products that did not include the ability to sell those products free and clear of LGE's patent claims—since no rational customer would pay any significant price for a product that cannot be used without infringing.

Pet. Br. 52. In doing so, petitioners overlook the facts of the instant case. Intel, a large and sophisticated intellectual property licensor and licensee, did what petitioners say no rational company would do—pay for a license to make and sell that did not inure to the benefit of its customers. Further, petitioners' statement that "no rational customer would pay" for a component subject to such an agreement flies in the face of its own behavior. *Id.* After receiving explicit notice of the arrangement between respondent and Intel, petitioners continued to purchase Intel components. *Id.* at 9.

CONCLUSION

In the decision below, the Federal Circuit specifically invoked this Court's seminal decision in *Mitchell* and noted the effect of the Federal Circuit's decision in *Mallinckrodt. LG Elecs., Inc. v. Bizcom Elecs., Inc.*, 453 F.3d 1364, 1369–70 (Fed. Cir. 2006). In formulating its holding in *Mallinckrodt*, the Federal Circuit faithfully applied the full history of this Court's jurisprudence of patent exhaustion in a scholarly exposition. *Mallinckrodt*, 967 F.2d at 706–09. There is nothing aberrant in the reasoning in either *Mallinckrodt* or the decision *sub judice.* Petitioners and their *amici* allies take issue with the Federal Circuit's application of this Court's decisions to a set of facts clearly distinguishable from the facts in *Univis.* While clarification of the interplay between *Univis* and *Mallinckrodt* may serve the salutary function of providing guidance to the bench and the bar, such clarification need not eviscerate the *Mitchell/Gen. Elec./Gen. Talking Pictures I* and *II* line of authority. The decision below, thus, should be affirmed.

Respectfully submitted,

ROBERT E. GOODFRIEND
Counsel of Record
JASON BLACKSTONE
MCKOOL SMITH, P.C.
300 Crescent Court
Suite 1500
Dallas, Texas 75201
(214) 978-4000

RODNEY R. SWEETLAND, III
MICHAEL G. MCMANUS
MCKOOL SMITH, P.C.
1025 Connecticut Avenue, NW
Suite 1000
Washington, D.C. 20036
(202) 828-1272

ROBERT A. COTE
MCKOOL SMITH
399 Park Avenue
New York, New York
10022
(212) 402-9400

JAMES N. WILLI
JOEL L. THOLLANDER
GRETCHEN K. HARTING
SETH R. HASENOUR
MCKOOL SMITH
300 West 6th Street
Suite 1700
Austin, Texas 78701
(512) 692-8700

Counsel for Wi-LAN, Inc.